SIEMENS

Ingenuity for life

Power Engineering Guide

Edition 8.0

POWEREN.IR

siemens.com/power-engineering-guide

Power Engineering Guide

Edition 8.0

How to use this document?

1

Intelligent grid solutions – From generation to consumption

2

Power transmission and distribution solutions

3

Substations and switchgear

4

Devices and components

5

Transformers

6

Protection, substation automation, power quality and measurements

7

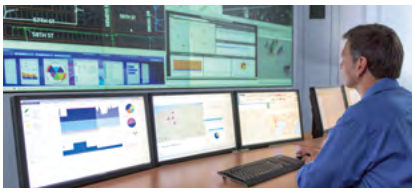

Grid control and grid applications

8

Communication network solutions for transmission and distribution grids

9

Consulting and planning for power grids

10

Services and support

11

Glossary

12

Abbreviations, trademarks

How to use this document

Main navigation

Go to main content page

Go to “How to use this document”

Chapter navigation

You can navigate directly from the chapter overview to the related chapter or section

1.1	**Chapter**	**17**
1.1.1	**Section**	**17**
1.1.2	**Section**	**17**
2.2	**Chapter**	**22**
2.2.1	Section	22

You can navigate to the chapter overview

1

2

3

4

Further information

You can receive further information

For further information:
siemens.com/xxxxxxx

POWEREN.IR

1 Intelligent grid solutions – From generation to consumption

Intelligent grid solutions – From generation to consumption **5**
Connecting grids 6
Agility in energy 7
Totally Integrated Power 7

Intelligent grid solutions – From generation to consumption

1
2
3
4
5
6
7
8
9
10
11
12
?

Electrical power is the basis of modern life. It is the main resource for industries and infrastructure, it makes growth and progress possible, and it is the energy of the future that is shaping a more environment-friendly energy system. The transformation of the energy system has already begun and is gaining momentum through the renunciation of fossil fuels, market liberalization, and growing environmental awareness. At the same time, there's a shift from centralized, large-scale power generation to a highly complex distributed generation landscape where the cost-efficient integration of renewables is the main priority. And our need for energy continues to grow.

These developments are creating new and highly demanding challenges: Grids must be able to flexibly manage bidirectional power flow and intermittency, and the entire system and all its operations must be kept absolutely safe and secure at the same time. Furthermore, new capacities need to be added, existing equipment updated, and grid operation optimized to make the entire infrastructure fit for the future. The integration of renewable energy into existing grids poses new challenges due to the increasing distances between power generation and consumption, the need for more cost-efficient infeed of power from renewables, and fluctuating demand.

While some countries are advancing the integration of renewables, others require a different energy mix. These energy-hungry countries need to supply a sufficient amount of affordable and available energy for their rapidly growing economies. Next-wave electrifier countries first need to build an infrastructure to provide their economy with sufficient power. To ensure that the power makes its way in a reliable, safe, and efficient manner in increasingly complex transmission and distribution environments, they need digitally enabled solutions based on a sophisticated combination of innovative products, software, and services. These solutions must be socially acceptable due to an increase in public awareness: for example, resistance to new overhead lines.

Siemens' comprehensive portfolio covers the entire value chain in all major application fields: power transmission, power distribution, and power supply for industries and facilities. It is helping actively shape the future of energy and is a major success story for all stakeholders from the point of grid infeed all the way to the customer. A steady stream of innovations in power technology for more than 160 years has made Siemens a trusted, valued partner to leading energy and industrial companies worldwide. In this tradition, Siemens is addressing the new challenges to the energy system in three areas: Connecting grids, Agility in energy, and Totally Integrated Power.

We are shaping the energy system of today and tomorrow with resilient electrification, efficient automation, comprehensive digitalization, seamless integration, and long-standing, trusted business partnerships.

Fig. 1-1: Main aspects of energy technology

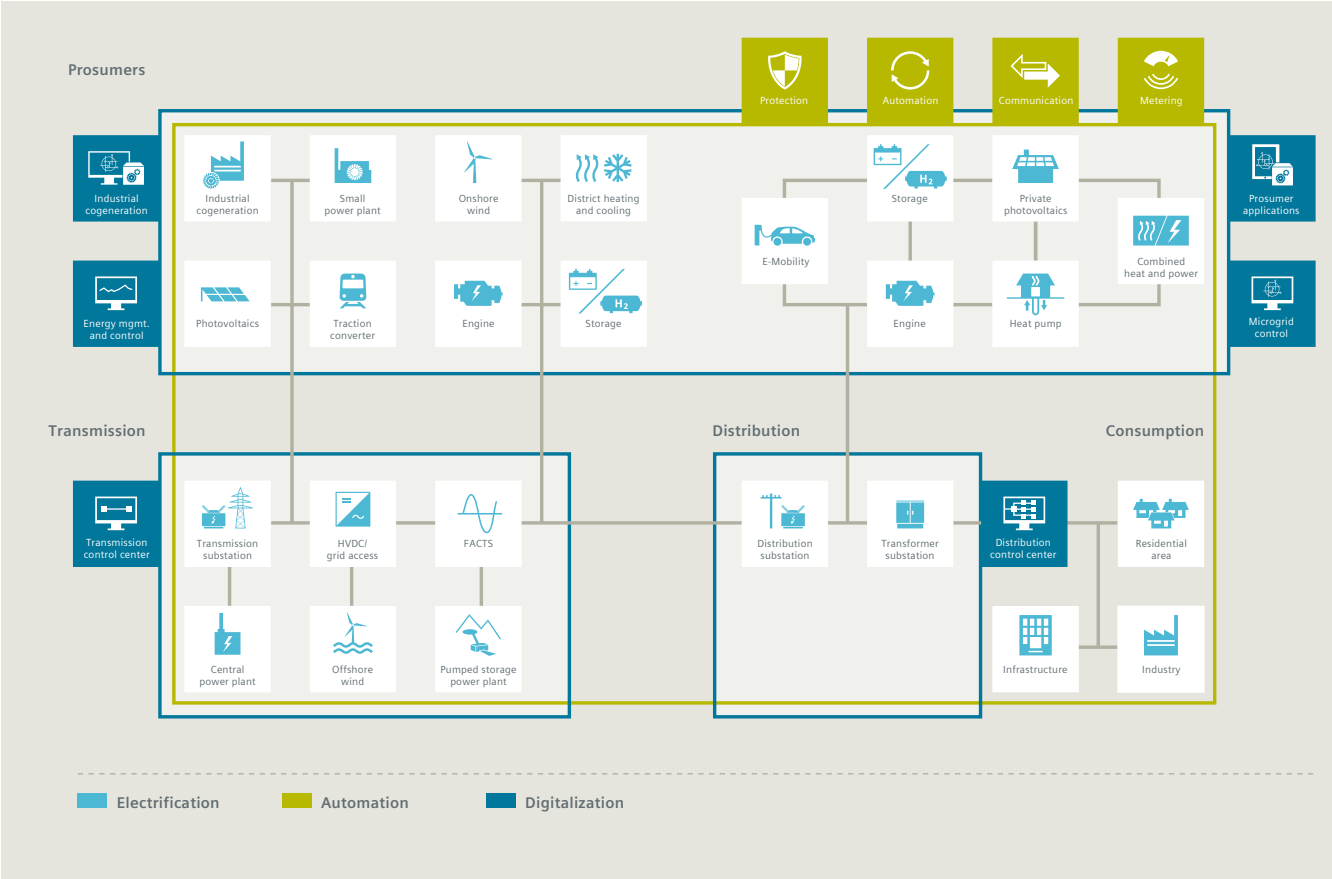

Fig. 1-2: Energy system increasingly distributed and driven by "Prosumer"

Connecting grids

Grid operators who are preparing their grids for future demands need future-proof, flexible solutions that will ensure maximum investment security, comply with regional regulations and standards, and are accepted by society. Key areas for grid operators are long-distance transmission, grid access, and grid stability.

High-voltage direct-current (HVDC) transmission has proven to be the best solution to compensate for increasing distances between source and load. With about 50 completed projects worldwide, Siemens is the leading provider of HVDC technology. The innovative HVDC solution provides grid-stabilizing functions and makes also possible the safe transmission of electricity through existing overhead lines.

In the area of AC transmission, the focus is on grid stability on all voltage levels. New FACTS solutions enable the lasting stabilization and optimization of existing infrastructures. Storage solutions and electrolysis systems make it possible to store excess energy, which can compensate for the volatile infeed from wind and photovoltaic energy sources as well as stabilize the grid.

Solutions like the offshore transformer module, Siemens' AC power connection module for near-shore wind power, and the DC-based grid connection solution using diode rectifier units for more remote transmission, help make renewable energy more competitive.

With the comprehensive and integrated Siemens portfolio, grid operators can make their grid infrastructure fit for the future.

POWEREN.IR

1
2
3
4
5
6
7
8
9
10
11
12

Agility in energy

As distribution grids become increasingly complex, Siemens is focusing on helping its customers improve their reliability and efficiency so they can stay ahead of the challenges from the control room across the grid to the consumer. All grid products, solutions, and services from Siemens have a common denominator: the digitally enabled convergence of information technology and operation technology. They facilitate agility in energy through the understanding of technology and market developments, focus on the relevant fields of action, and operate based on consistent, end-to-end automation and digitalization.

Siemens delivers power system studies, field measurements, disturbance investigations including post-event analyses, and also provides professional testimonials and expert software tools for power system simulation and analysis. Products, solutions, and services from Siemens significantly improve the reliability and availability of any power distribution system, and they also contribute to highly efficient grid management and operation. Whether remote signaling and monitoring, fully automated operation, or microgrid management: The Siemens portfolio provides all the functions that system operators need. Distribution automation significantly improves the reliability and availability of power distribution grids. The functionality ranges from remote monitoring and control to fully automated applications.

Consulting and analysis methodology provides comprehensive support in the development and implementation of business strategies and technology for the energy system of the future. For managing microgrids, Siemens offers comprehensive solutions for planning, monitoring, and control. This allows cost-effective operation, low environmental impact, and the highest efficiency as well as power quality and security of supply.

The increasingly complex technical framework, as well as market mechanisms that are sometimes difficult to understand and predict, call for highly adaptive solutions for distribution system operators and utilities. These solutions need to be optimally customized to the individual company's situation and strategic agenda.

Only Siemens provides the agility to meet all future challenges in the energy market – and to stay ahead of the changes.

Totally Integrated Power

Industries, buildings, and facilities all depend on electrical power. To ensure that power makes its way in a reliable, safe, and efficient manner in increasingly complex distribution environments, automation and digitalization need to work hand-in-hand. Totally Integrated Power (TIP) is Siemens' unique approach that enables accurate and individual solutions that meet these demands – for any industry. TIP offers precisely customized solutions for the automotive, chemical, construction, oil and gas, and mining industries as well as data centers, harbors, and buildings of all sizes. Of course Siemens has the right TIP solution which fits to the specific demands for other markets too.

TIP is an integrated portfolio for all power supply applications. The range of products and solutions covers all voltage levels and is modular and precisely matched. It offers excellent support for every application area and can be integrated into any existing system. Siemens' powerful software enables transparent planning, analysis, and control of electrical power distribution in industries, buildings, and facilities of every kind. TIP provides everything required to supply power in challenging environments. Smart interfaces to industrial and building automation systems are the key to tapping the full potential offered by an integrated power supply solution. Whether for a greenfield project or for an existing, heterogeneous overall system, TIP embraces all factors and the entire lifecycle – from planning and analysis through implementation and operation to maintenance and services. Even for the toughest demands of supply-critical assets, TIP facilitates the customers' business in terms of planning and procurement. It's the modular one-stop-shop solution for all power requirements.

Only Totally Integrated Power ensures that the power supply for business operations works in the most reliable, safe, and efficient manner.

2 Power transmission and distribution solutions

2.1	**Complete portfolio from a single source**	**9**
2.1.1	Future challenges for transmission and distribution grids	9
2.1.2	Consulting and planning	10
2.1.3	Entire life-cycle capabilities	12
2.2	**High-voltage solutions**	**13**
2.2.1	High-voltage direct current transmission systems (HVDC)	13
2.2.2	Flexible AC transmission systems (FACTS)	22
2.2.3	Grid access solutions	26
2.2.4	Power transmission lines	32
2.3	**Medium-voltage systems**	**55**
2.3.1	SIESTORAGE – energy storage system	55
2.3.2	SIHARBOR / SIPLINK	63
2.4	**Portable power solutions and E-house**	**65**
2.5	**Microgrids**	**73**
2.5.1	Operation, monitoring, administration, planning – all under one roof	73
2.5.2	Microgrid market segments	74
2.5.3	Siemens microgrid management systems	76
2.6	**Intelligent transformer substations**	**77**
2.7	**Cyber security**	**82**
2.7.1	Cyber security in energy management	82
2.7.2	Cyber security framework	83
2.7.3	Operational security	86
2.7.4	Applied cyber security	89
2.7.5	Cyber security consultancy	92
2.7.6	Final remarks	92

2.1 Complete portfolio from a single source

Feeding the power generated at different locations over long distances into power systems often calls for optimized power transmission and distribution solutions. Despite the challenges it poses, however, interconnecting of different regions, countries or even continents remains a viable option for providing these areas with economical access to power. As a solution provider with extensive experience in every aspect of power transmission and distribution, Siemens has already implemented a large number of projects linking power systems or connecting decentralized generating units to the grid. In each case, conditions were unique. And because Siemens strives to provide its customers with the most cost-efficient results, the implemented solutions using different technologies were also unique.

Siemens offers a comprehensive portfolio for public and private utilities as well as for power supply for cities, industrial plants, buildings and various infrastructure networks. Our solutions from low and medium distribution voltage levels up to high and ultra-high voltage levels for transmission networks support the target to develop highly efficient, reliable and safe power supply.

2.1.1 Future challenges for transmission and distribution grids

The power grid of the future must be reliable, economical efficient, aligned with climate protection and resource efficiency targets while taking into account the compatibility with society and public acceptance. Thus the networks of today and tomorrow have to perform higher to answer the upcoming challenges:

- Changing energy mix towards high share of Renewable Energy Sources (RES)
- Integration of large wind and solar power plants with increasing distance to load centers
- Bulk power flows, which are fluctuating and bi-directional
- Strengthen electricity market and energy trading
- Decreasing system stability and reliability
- Aging infrastructure
- Increasing cost pressure and changing regulatory framework

These challenges do vary from country to country and region to region. Therefore it is important to provide a broad range of solutions, which can flexibly be adapted to the needs arising in the networks and thus help ensuring grid resilience in the long term. The combination of these challenges can be tackled with the help of ideas, intelligent solutions as well as advanced technologies.

By means of power electronics, they provide features which are necessary to avoid technical problems in the power systems, they increase the transmission capacity and system stability very efficiently and help to prevent cascading disturbances. For example innovative solutions with HVDC (High-Voltage Direct-Current Transmission) and FACTS (Flexible AC Transmission Systems) have the potential to cope with the new challenges.

The vision and enhancement strategy for the future electricity networks can be outlined as follows:

- Flexible: fulfilling operator needs whilst responding to the changes and challenges ahead
- Accessible: granting connection access to all network users, particularly for Renewable Energy Sources (RES) and high-efficiency local generation with zero or low carbon emissions
- Reliable: assuring and improving security and quality of supply
- Economic: providing best value through innovation, efficient energy management and “level playing field” competition and regulation

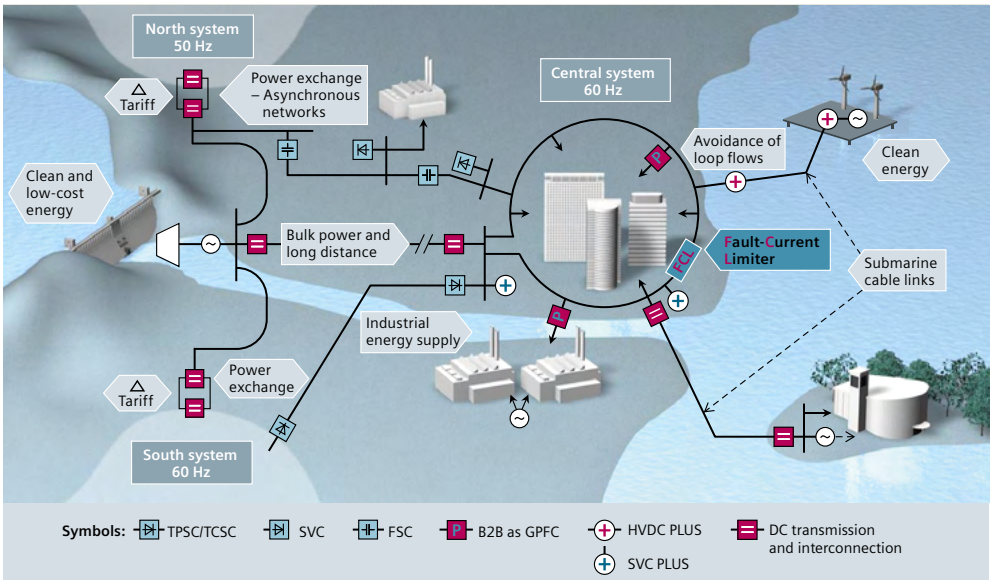

Fig. 2.1-1: Power transmission and distribution solutions

1
2
3
4
5
6
7
8
9
10
11
12
?

2.1.2 Consulting and planning

Consulting and planning for power systems

Siemens PTI
For mastering the technical and economical challenges of today's and future energy systems, Siemens recommends a holistic approach comprising strategic advisory services, technical consultation, and state-of-the-art grid anaylsis software. Drawing on more than 60 years of experience and continuous innovation in power system planning, Siemens experts address the full spectrum of power system analysis, planning, and optimization studies. Siemens has developed a PSS(R) power system planning and software suite, which is based on the company's experience in conducting international studies and adapting to dynamic industry challenges. Customers can optimize their business value thanks to the expert advice provided by our strategic consultants in the fields of business transformation, infrastructure development, as well as market and transaction advisory services. Siemens' regional competence centers around the world, together with our financial strength, enable us to work closely with customers to develop innovative solutions tailored to their specific needs that will help turn change into opportunities and create sustainable value allong the whole lifecycle (fig. 2.1-3).

Energy Business Advisory
Maximizing the value of enterprises in an increasingly complex, global, and evolving energy marketplace is the main aim of the energy business advisory. Siemens' consulting service combines technology and market expertise as well as decades of industry experience in a flexible methodology toolbox to support its customers across all project stages, from strategy development to implementation. Siemens' customers can benefit from our expertise in strategic planning combined with Pace Global's long-standing experience in the fields of risk management, market advisory, infrastructure development, and transaction advisory. With our collective resources, power, natural gas, renewable energy generation, and environmental markets can take advantage of a comprehensive best practice perspective.

Power System Consulting
Evolving industry challenges and opportunities along with the rising complexity of modern power systems call for comprehensive and systematic grid planning. Siemens' renowned power system consulting experts leverage experience gained in diverse projects to develop grid concepts that align with the business strategies of utilities and end customers. To enable our customers to make well-informed decisions that will help them enhance the structure, performance, and operation of their systems, we provide insights based on in-depth power system analysis of both technical and economic factors, and high-level planning competence.

Fig. 2.1-3: Planning tasks related to a typical project lifecycle

Our services address utility as well as industrial or commercial grids, and cover the complete range of studies: from steady-state, dynamic, and transient analyses, to protection and control concepts and power quality aspects. To meet individual customer demands, we offer tailored services in our ongoing partnerships, as well as in our studies and long-term planning and research projects.

Software Solutions
System planners and operators require applications and solutions that will support their daily simulation and analysis tasks. The Power System Simulator (PSS®) product suite provides a full set of integrated and specialized applications for the simulation, analysis, and modeling of transmission, distribution, and industrial power networks, as well as gas, water, heating, and cooling infrastructures. Offering simple integration into any existing IT environment, these powerful and user-friendly tools feature an intuitive graphical user interface, customizable visualization options, automation capabilities, and efficient data management. Data exchange with other systems (for example, EMS, DMS, AMS, GIS, and additional planning tools) is provided through industry standards, such as CIM, as well as native interfaces. Customers can also benefit from Siemens software solutions, which are based on a blend of engineering and software architecture expertise, customized software development capabilities, award-winning project management, and existing product functionality.

For further information:
siemens.com/power-technologies

1
2
3
4
5
6
7
8
9
10
11
12
?

Consulting and planning for industry and infrastructure power supply

Experts – the Siemens TIP Consultant Support team – help electrical designers in many countries find holistic solutions for the fields of infrastructure, building and industry – even when it comes to critical power supply, for example, in hospitals and data centers.

All along the various planning phases, planners have recourse, to efficient software tools, online tender specification texts, and planning and application manuals.

The innovative SIMARIS® planning tools set standards in terms of planning efficiency. They support the planning process when dimensioning electric power distribution systems, determining the equipment and systems required, and preparing tender specification texts. The product portfolio of devices and systems required, ranging from the medium-voltage switchgear to modular installation devices in the distribution board, is mapped. This enables to plan entire power distribution systems from start to finish using the free-of-charge SIMARIS planning tools (fig. 2.1-4).

Siemens also provides qualified support for creating technical specification lists in the form of online tender specification texts within the framework of Totally Integrated Power. The fully integrated Siemens portfolio for electric power distribution can be found there. The clear tree structure in combination with a search function helps users find texts for the desired products. The text modules that were selected can be compiled in customized specifications (fig. 2.1-5).

The planning and application manuals will help you familiarize yourself with the technical background when planning power supply systems, and implementing it in product and systems solutions. In addition to the topical introduction provided by the planning manuals, the application manuals include solution criteria and approaches for planning power distribution to industry-specific buildings that meet our customers' needs. Typical configurations and boundary conditions are presented in the form of examples, which are then turned into feasible concepts for the relevant building types, using specific products and system proposals. All manuals can be downloaded from our website as PDFs (fig. 2.1-6).

Fig. 2.1-4: The SIMARIS planning tools – easy, fast and safe planning of electric power distribution

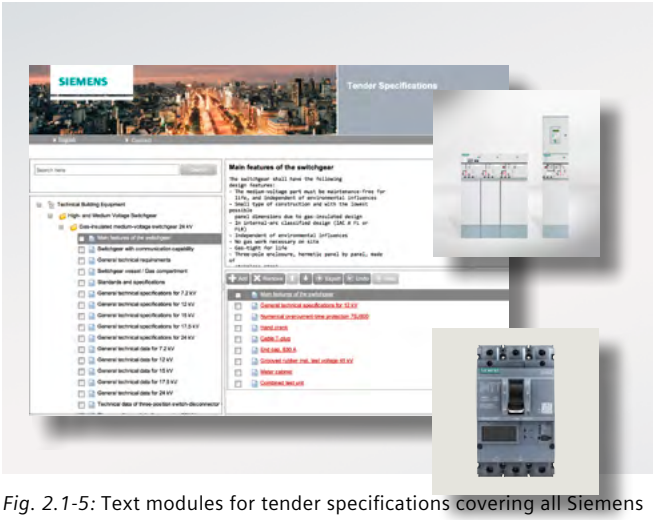

Fig. 2.1-5: Text modules for tender specifications covering all Siemens products for electric power distribution

Fig. 2.1-6: Planning and application manuals impart specialized and up-to-date knowledge

For further information:

siemens.com/tip-cs
siemens.com/simaris
siemens.com/specifications
siemens.com/tip-cs/planningmanuals

1
2
3
4
5
6
7
8
9
10
11
12
?

2.1.3 Entire life-cycle capabilities

Managing Entire Projects

Project management
Supplying power is more than just combining a number of individual components. It calls for large-scale projects, such as transmission systems or industrial complexes, especially in countries where the demand for power is growing at an accelerated pace. The best partner to handle such large projects is an expert who can carefully analyze the demand, take an integrated approach to project planning, and consider all the general conditions. A qualified project partner is one that can provide high-quality components and services for both power transmission tasks and power system management. Such a partner also can ensure that the systems are installed expertly.

Turnkey solutions
Siemens' many years of experience allow to offer turnkey power transmission solutions that are tailored to individual requirements. Siemens supplies all components, including power plants, AC or DC transmission systems, and high-voltage interconnected power systems with high, medium and low voltage that finally reach the individual customers. What makes these turnkey solutions so attractive is that one party is responsible for coordinating the entire project, thereby reducing the number of interfaces between system operator and supplier to a bare minimum. Turnkey projects also reduce the operator's own share in project risks, since Siemens is responsible for delivering a system that is ready for operation.

Engineering, procurement, production and construction
In addition to comprehensive planning and management services, engineering is one of Siemens' special strengths. Siemens can produce or procure all necessary components and perform all construction work up to testing, commissioning and putting an entire system into operation. With Siemens as a partner, companies can benefit from Siemens' extensive manufacturing expertise and from the work of experienced Siemens engineers who have already participated in a wide range of projects worldwide. Working on this basis, Siemens can provide the best technology for projects based on proprietary Siemens components and additional hardware purchased from reputable vendors. Siemens experts have the important task of determining which of the various technical options are best suited for implementing the project. They consider transmission capacity, transmission efficiency and the length of the transmission line, and after the best technical solution has been determined, they assess its long-term cost efficiency for the operator. Only then can the actual implementation begin for installation and on-time commissioning.

Maintenance
Systems will operate at their best when equipment lasts a long time and provides continuous trouble-free operation. The Siemens maintenance service ensures that all components are always running safely and reliably. Siemens continuously maintains operator systems through regular inspections including all switchgear and secondary technology. If a malfunction occurs during operation, Siemens is immediately on the job; support is available 24 hours a day, 365 days a year. And with the increased use of state-of-the-art online monitoring and remote diagnosis systems, Siemens offers additional possibilities for keeping operating costs to a minimum.

Optimization and modernization
Technological evolution leads to equipments and systems which are continuously improving. Siemens offers retrofit and upgrade services for existing schemes. This fast and economical solution allows customers to invest their capital wisely and take full advantage of Siemens' experience in adapting older systems to new technical standards.

Partners throughout the System Life Cycle

Siemens is with system operators every step of the way to help them develop their projects, to create financing solutions and to provide project management (fig. 2.1-7), and supports them beyond engineering, production and construction. This support continues as the system is commissioned, as customers need maintenance services and even when it is time to modernize. The partnership between Siemens and the system operators does not stop when a turnkey job is finished: Siemens accompanies the system operators throughout the entire life cycle of their systems, offering a wide range of services with products of the highest quality that are always based on the most durable technologies.

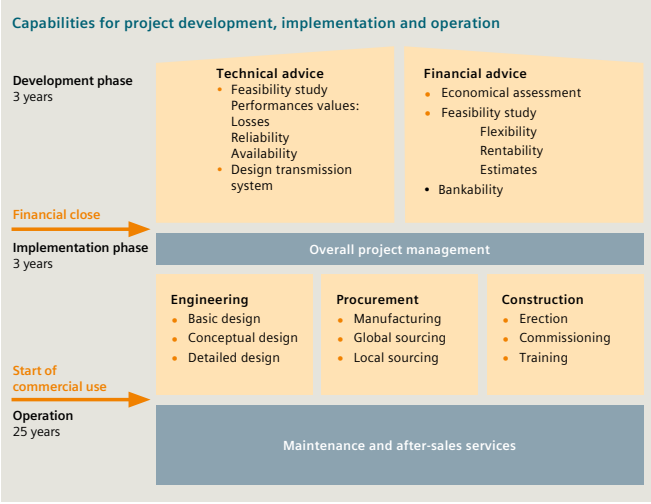

Fig. 2.1-7: Siemens services for the entire system life cycle

For further information:
siemens.com/energy/power-transmission-solutions

2.2 High-voltage solutions

2.2.1 High-voltage direct current transmission systems (HVDC)

Siemens HVDC transmission is used when technical and/or economical feasibility of conventional high-voltage AC transmission technology have reached their limits. The limits are overcome by the basic operation principle of an HVDC system, which is the conversion of AC into DC and viceversa by means of high power converters.

Featuring its fast and precise controllability, a Siemens HVDC can serve the following purposes:

- Transmission of power via very long overhead lines or via long cables where an AC transmission scheme is not economical or even not possible
- Transmission of power between asynchronous systems
- Exact control of power flow in either direction
- Enhancement of AC system stability
- Reactive power control and support of the AC voltage
- Frequency control
- Power oscillation damping.

Siemens HVDC technologies

Depending on the converter type used for conversion between AC and DC, two technologies are available:

- Line Commutated Converter technology (LCC) based on thyristor valves
- Voltage Sourced Converter technology (VSC) based on IGBT valves, also known as HVDC PLUS.

Both technologies enable Siemens to provide attractive solutions for most challenging transmission tasks ranging from extra-high-voltage bulk power transmission to the connection of systems in remote locations to main grids; from long-distance overhead line or cable to interconnection of two systems at one location.

Main types of HVDC schemes

The main types of HVDC converters are distinguished by their DC circuit arrangements (fig. 2.2-1), as follows:

Back-to-back

Rectifier and inverter are located in the same station. These converters are mainly used:

- To connect asynchronous high-voltage grids or systems with different frequencies
- To stabilize weak AC links
- To supply more active power where the AC system already is at the limit of its short-circuit capability
- For grid power flow control within synchronous AC systems.

Cable transmission

DC cables are the most feasible solution for transmitting power across the sea to supply islands/offshore platforms from the mainland and vice versa.

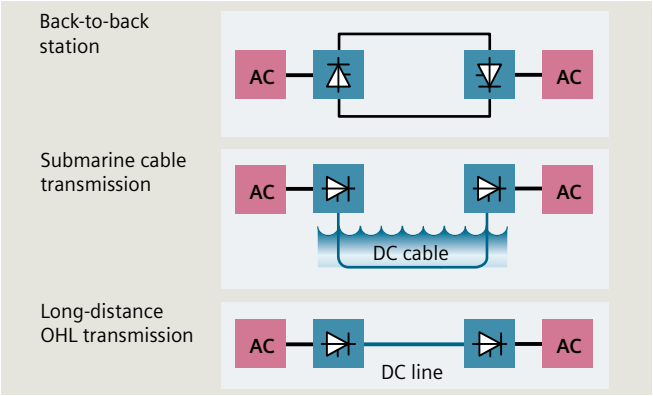

Fig. 2.2-1: Overview of main power transmission applications with HVDC

Fig. 2.2-2: Earthquake-proof and fire-retardant thyristor valves in 500 kV long-distance transmission in Guizho-Guangdong, China

Long-distance transmission

Whenever bulk power is to be transmitted over long distances, DC transmission is the more economical solution compared to high-voltage AC.

LCC HVDC – the "classical" solution

After more than 50 years with Siemens constantly contributing to its development, LCC HVDC is the most widely used DC transmission technology today.

Technology

Thyristor valves

The thyristor valves are used to perform the conversion from AC into DC, and thus make up the central component of the HVDC converter station. The valves are described by the following features:

- Robust design
- Safe with respect to fire prevention due to consequent use of fire-retardant, self-extinguishing material
- Minimum number of electrical connections and components avoiding potential sources of failure
- Parallel cooling for the valve levels using de-ionized cooling water for maximum utilization of the thyristors
- Earthquake-proof design as required (fig. 2.2-2)

1
2
3
4
5
6
7
8
9
10
11
12
?

- Direct Light-Triggered Thyristors (LTT) with wafer-integrated overvoltage protection – the standard solution for DC currents up to 6.25 kA.

Filter technology
Filters are used to balance the reactive power of HVDC and power system and to meet high harmonic performance standards.
- Single-tuned, double-tuned and triple-tuned as well as high-pass passive filters, or any combination thereof, can be installed depending on the specific requirements of a station.
- Wherever possible, identical filters are selected maintaining a high performance even when one filter is out of service.

Applications
The primary application areas for LCC HVDC are:
- Economical power transmission over long distances
- Interconnection of asynchronous power grids without increase in short-circuit power
- Submarine DC cable transmission
- Hybrid integration of HVDC into a synchronous AC system for stability improvement
- Increase in transmission capacity by conversion of AC lines into DC lines.

Power ratings
Typical ratings for HVDC schemes include:
- Back-to-back: typically up to 600 MW
- Cable transmission: up to 1,000 MW per HVDC cable
- Long-distance transmission: up to 10,000 MW.

Ultra-HVDC transmission (UHV DC) bulk power
UHV DC from Siemens is the answer to the increasing demand for bulk power transmission from remote power generation to large load centers. After having been awarded the contract in 2007, Siemens has successfully commissioned the world's first ±800 kV UHV DC system with 5,000 MW in China Southern Power Grid in 2010 (fig. 2.2-3).

Technology
The high DC voltage imposes extreme requirements to the insulation of the equipment, and leads to huge physical dimensions (fig. 2.2-4). The capability to withstand high electrical and mechanical stresses is thoroughly investigated during the design. All components are extensively tested to assure that they withstand most severe operating conditions and meet highest quality standards.

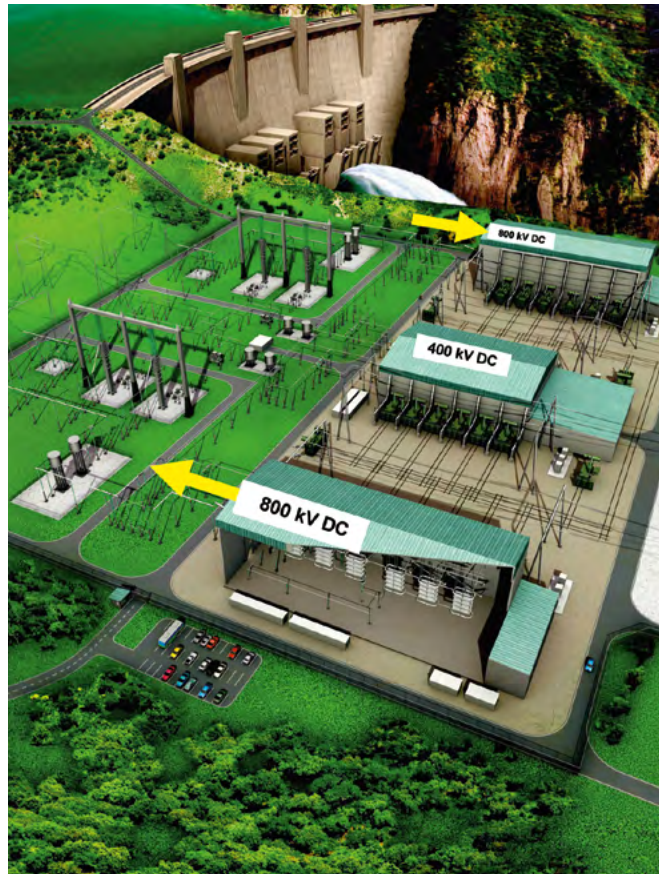

Fig. 2.2-3: Two times two 400 kV converter systems connected in series form a ± 800 kV UHV DC station

Fig. 2.2-4: A 20.8 m long wall bushing is required in order to connect the 800 kV terminal of the indoor thyristor valves to the outdoor HVDC equipment and overhead line

1
2
3
4
5
6
7
8
9
10
11
12
?

The thyristor valves are equipped with either 5" or 6" thyristors depending on the transmission rating (fig. 2.2-5).

Applications
UHV DC transmission is the solution for bulk power transmission of 5,000 MW or higher over some thousand kilometers. Compared to a 500 kV LCC HVDC system, the Siemens 800 kV UHV DC reduces line losses by approx. 60 % – an important aspect with respect to CO_2 reduction and operational cost.

Special attention has to be paid to the corresponding AC networks that have to supply or absorb the high amounts of electric power.

Power ratings
The Siemens 800 kV HVDC systems are designed to transmit up to 10,000 MW over long distances.

HVDC plus – one step ahead
VSC technology offers unique advantages for HVDC transmission which become more and more important for applications like connecting remote renewable energy sources, oil and gas platforms, or mines to an existing grid.

Using the latest modular IGBT (Insulated Gate Bipolar Transistor) technology in a pioneering Modular Multilevel Converter (MMC) design, Siemens engineers have developed HVDC PLUS as a landmark product in the evolution of HVDC transmission.

The high power ratings available today make HVDC PLUS increasingly attractive also for projects where LCC HVDC could be used from a technical perspective.

Features
HVDC PLUS provides important technical and economical advantages compared to LCC:

- HVDC technology in the smallest possible space:
  An HVDC PLUS station does typically not require any harmonic filters (fig. 2.2-6). The MMC design allows to realize nearly perfect sinusoidal AC-side converter terminal voltages which are virtually free from harmonics. Together with a compact design of the MMC, this makes HVDC PLUS perfectly suitable for offshore platforms or stations with limited space (fig. 2.2-7).
- Independence from short-circuit capacity:
  HVDC PLUS can operate in networks with very low short-circuit capacity or even in isolated systems with or without own generation using its black-start capability.
- Unipolar DC voltage
  The DC voltage polarity is fixed independently from the direction of power flow. This allows integration into multi-terminal systems or DC grids. HVDC PLUS can operate with extruded XLPE or mass-impregnated DC cables.
- Economical design and standardization:
  The modularly designed HVDC PLUS converter stations can be perfectly adapted to the required power rating.

Fig. 2.2-5: UH voltage and power electronics – the thyristor valves are designed to operate at 800 kV voltage level. Yunnan-Guangdong, China

Fig. 2.2-6: Converter station of the TransBay Project close to the city center of San Francisco. The world's first VSC HVDC transmission scheme in modular multi-level converter (MMC) topology

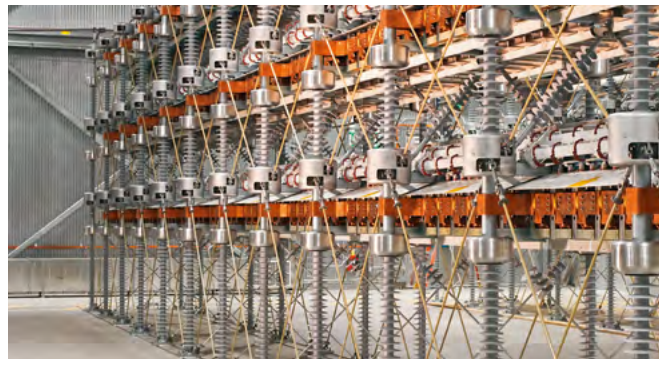

Fig. 2.2-7: The heart of HVDC PLUS is a modular multilevel converter (MMC) which can be scaled according to the voltage or power requirements. Transbay Cable, USA

- For symmetrical monopolar configurations, standard AC transformers can be used, whereas LCC transformers require special design due to additional stresses from DC voltage and harmonics.

1
2
3
4
5
6
7
8
9
10
11
12
?

Applications

HVDC PLUS can be applied in all fields of HVDC transmission similar to LCC HVDC (section 2.2.1) up to 1,000 MW or higher. The advantages of HVDC PLUS will be most apparent in circumstances that require the following capabilities:

- Black start of AC networks
- Operation in AC networks with low short-circuit capacity including islanded systems
- Compact design, e. g., for offshore platforms
- Operation in DC multi-terminal systems or in a DC grid.

Power ratings

The design of HVDC PLUS is optimized for power applications in the range from 30 MW up to 1,000 MW or higher, depending on the DC voltage.

Topologies (fig. 2.2-8)

Different topologies are available in order to fit best for the project-specific requirements:

- Half-bridge (HB) topology (fig. 2.2-9)
  The DC voltage is always controlled in one polarity only. Such a configuration is preferred for DC circuits with pure cable configurations. The risk of DC-side faults are small and typically lead to a permanent shutdown of the link.
- Full-bridge (FB) topology (fig. 2.2-10)
  The DC voltage can be controlled in a wide range including both polarities. Such a topology is predestinated for DC circuits with overhead lines, and provides the same features as known from HVDC Classic: DC line faults (e.g., due to lightning strikes) are cleared safely by a short-time reversion of the voltage. Furthermore, operation at reduced DC voltage levels is possible, which is often specified in case of pollution problems of line insulators.

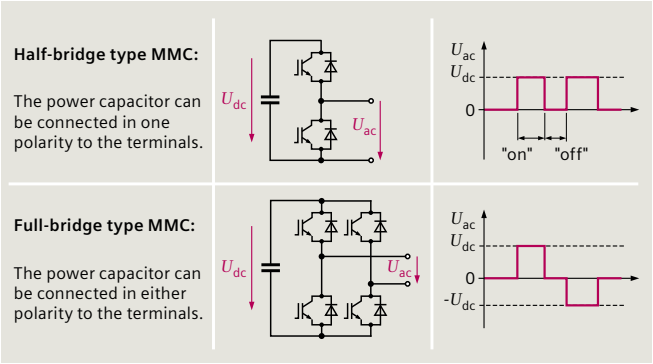

Fig. 2.2-8: MMC topologies: half and full bridge

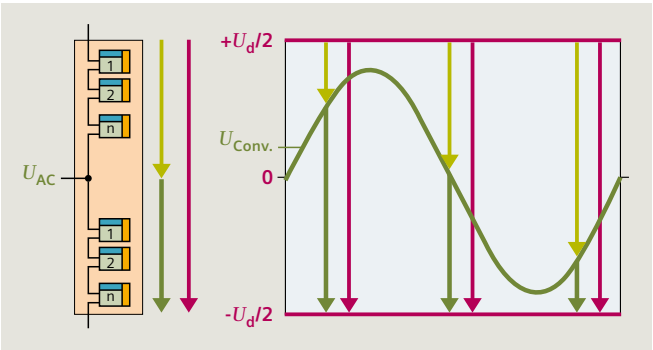

Fig. 2.2-9: Half-bridge MMC: The DC voltage is always higher than the AC voltage

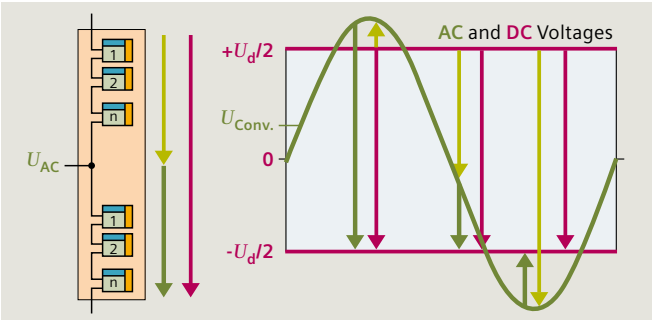

Fig. 2.2-10: Full-bridge MMC: The DC voltage is independent from the AC voltage and can be controlled to zero, or even be entirely reversed maintaining current control on the AC and DC sides including under short-circuit conditions

1
2
3
4
5
6
7
8
9
10
11
12
?

DC compact switchgear DC CS

Business drivers for the development of DC compact switchgear

The changing generation and load structure in existing power grids requires increased transmission capacity. Longer transmission distances and increased loading tend to reduce the AC grid's static and dynamic stability. To amend this, HVDC systems can be integrated into existing AC systems to provide the required transmission capacity, and at the same time increase grid stability.

What is more, the global trend towards decarbonization of power generation calls for an increased use of renewable energy sources (RES). While RES like offshore wind are typically found at great distances from the load centers, HVDC provides an effective (and in some cases the only) technical solution for power transmission.

The compact 320 kV DC switchgear DC CS is needed for HVDC cable connections to remote offshore wind farms, as well as for onshore HVDC projects. Thanks to its compact design, the DC CS helps to reduce the HVDC system's space requirements. Hence it is predestinated for applications where space is limited or expensive, e.g. offshore HVDC platforms for remote windfarms, as well as close to city centers.

Using the DC CS outdoors even in rough climates adds to this effect. In the near future, DC compact switchgear and transmission solutions will facilitate the realization of multi-terminal arrangements or DC grids, backing up the existing AC networks.

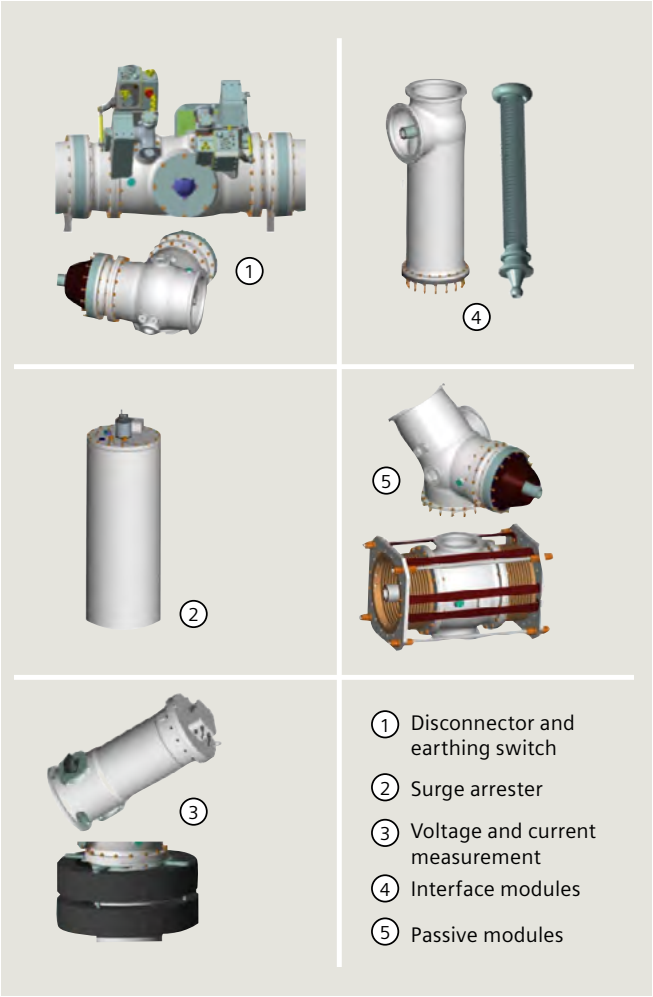

Fig. 2.2-11: Standardized modules of the DC CS product line

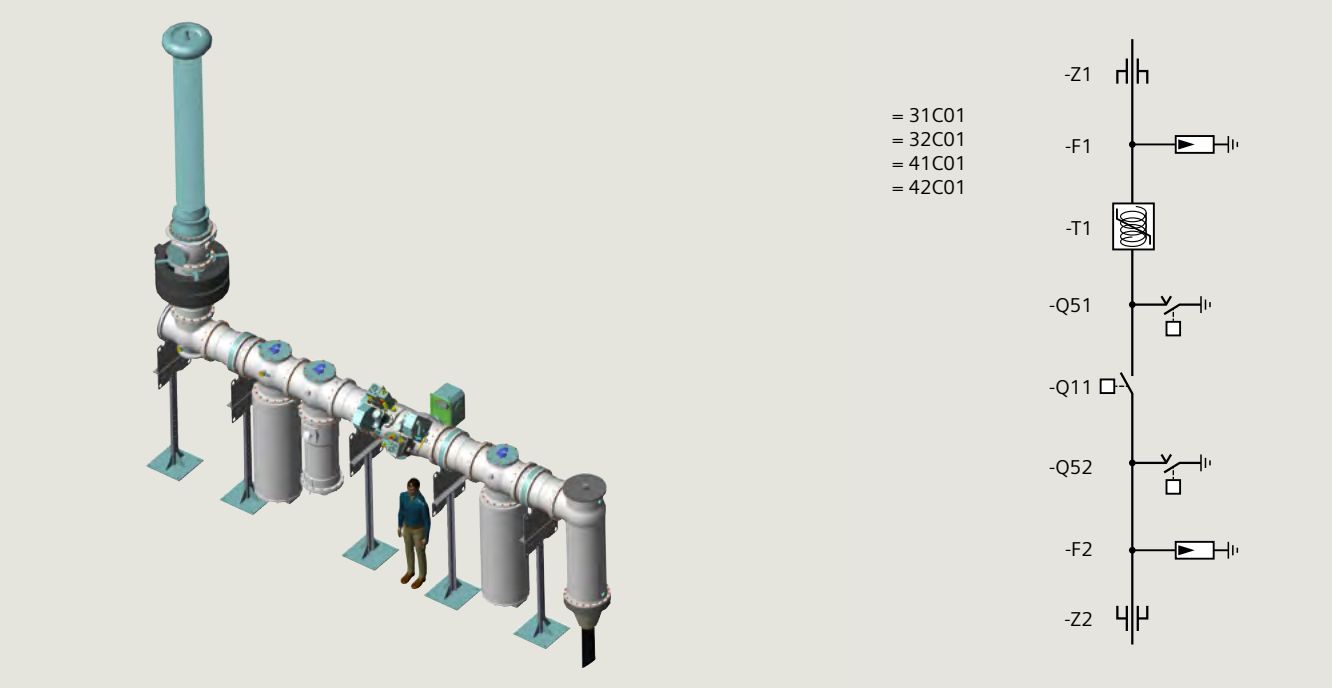

Fig. 2.2-12: 320 kV DC switchyard in/out bay

1
2
3
4
5
6
7
8
9
10
11
12
?

Modular structure
The 320 kV Direct-Current Compact Switchgear (DC CS) (without circuit-breaker) is developed based on proven 8DQ1 550 kV AC GIS design and a new DC insulator following the well-established resin-impregnated-paper design which has been used in wall bushings for decades.

The DC CS is a highly modularized product line, with standardized and predefined modules (fig. 2.2-11, see page before) which minimize the required interface engineering complexity between the DC CS modules as well as interfaces to e.g., control and protection systems. Examples of a 320 kV converter pole feeder arrangements are given in fig. 2.2-12 and fig. 2.2-13.

The range of modules like 0°/90° disconnector and earthing switch module and 45°/90° angle modules grants flexibility to adapt to complex arrangements such as designs with a single or double busbar.

The module catalog is completed by an RC divider for voltage measurement, the zero flux compensated current measurement system, surge arrester and compensation modules required for service access, and both axial and lateral heat dilatation.

Application and special arrangements
DC compact switchgear can be applied at various locations with an HVDC system as displayed in fig. 2.2-13. An important application option for DC CS is between the converter transformer and the converter valves. With bipolar arrangements where 2 or more converters are arranged in a line with neutral in between, the section between the secondary connection of a converter transformer and the respective converter valves is stressed with a DC voltage offset resulting in a mixed AC/DC voltage stress requiring dedicated DC equipment. On the DC terminal, the DC switchyard, transition stations (enabling compact transition from cable to overhead line) along the line, and finally future multi-terminal stations can be planned with DC CS (fig. 2.2-15, see next page).

The most important benefit of 320 kV DC compact switchgear is its inherent size advantage compared to air-insulated DC switchyard equipment.

Furthermore, the option for outdoor installation, even under extreme environmental conditions, is an advantage of DC CS. If for technical reasons, like temperature below -30 °C, a housing is required, the DC CS fits into prefabricated, containerized building modules (fig. 2.2-14). Containerized arrangements further have the advantage to pre-assemble and test whole switchyard/substation layouts locally at the manufacturer's or the container builder's plant, cutting short remote erection and commissioning efforts and costs, as well as simplifying the interface to civil works. Layouts with identical design which are repetitively used in a HVDC scheme can be planned and executed likewise, e.g., cable transition stations. Building and foundation costs can therefore be greatly reduced.

Fig. 2.2-13: 320 kV DC compact switchgear in the Siemens factory in Berlin

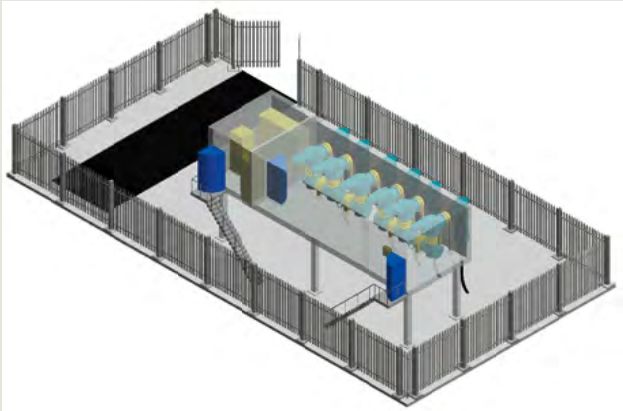

Fig. 2.2-14: 320 kV containerized arrangement

Finally, an underground installation hidden from view and public access is possible thanks to the encapsulation and compact design.

Regarding planned projects in densely populated areas, with critical points which are already occupied by traffic junctions and AC overhead lines, as well as by natural barriers like rivers, huge potential for compact DC transmission solutions is existent.

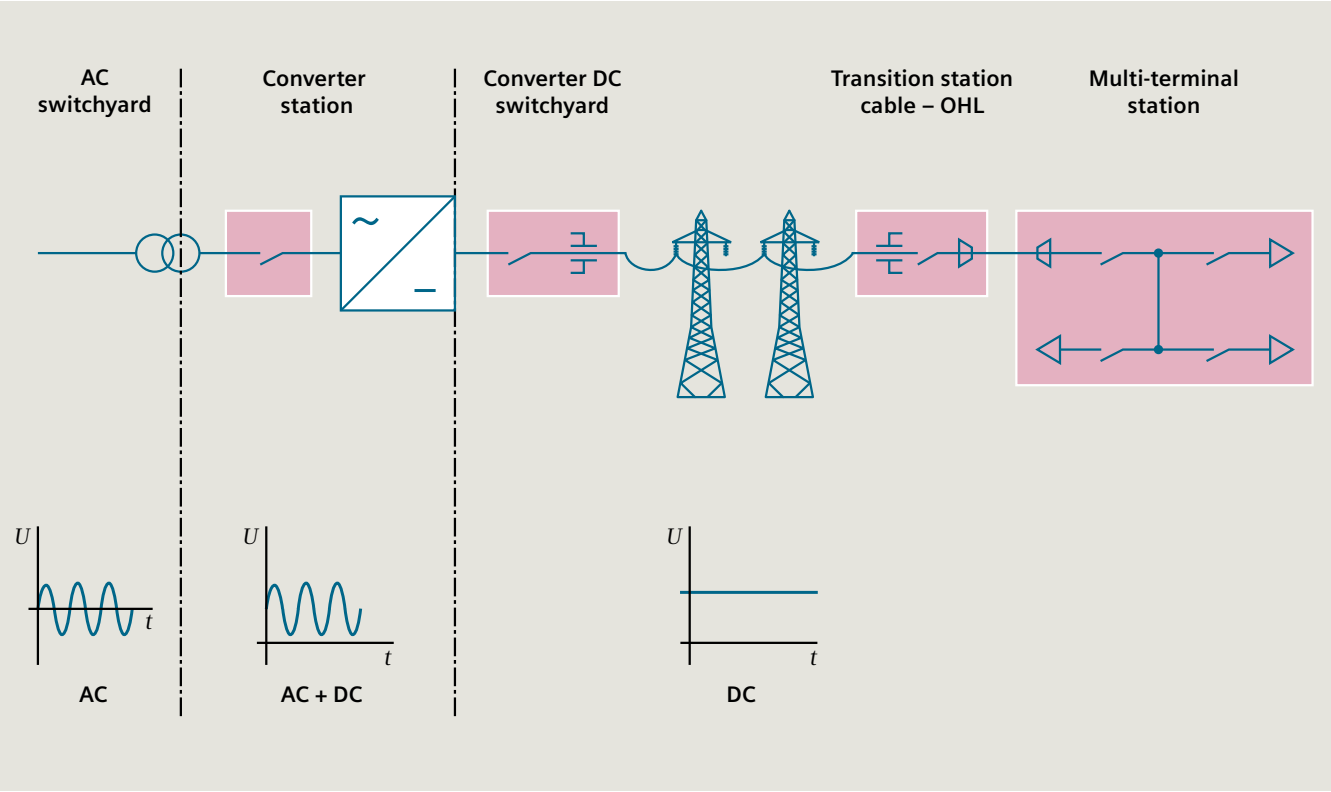

Fig. 2.2-15: Application for DC compact switchgear, between transformer and valves, DC switchyard, transition station and multi-terminal station

Technical data for switchgear type ±320 kV DC CS	
Rated voltage	±320 kV
Rated current	4,000 A
Rated short-circuit current	50kA/1sec
Max. continuous operating voltage	±336 kV
Lightning impulse voltage to earth/ across terminals	±1175 kV ±1175 kV ±336 kV
Switching impulse voltage to earth/ across terminals	±950 kV ±950 kV ±336 kV
DC withstand voltage	504 kV, 60 min
Ambient air temperature	-30°C...+50°C
Application	Indoor/Outdoor

Table 2.2-1: Technical data of ±320 kV DC CS

For further information please contact the Customer Support for Power & Energy:

Tel.: +49 180 524 70 00
E-Mail: support.energy@siemens.com
siemens.com/csc

1
2
3
4
5
6
7
8
9
10
11
12
?

Siemens HVDC control system: Win-TDC

The control and protection system is an important element in a HVDC transmission. The Siemens control and protection system for HVDC has been designed with special focus on high flexibility and high dynamic performance, and benefits from the knowledge gained from over 30 years of operational experience in HVDC and related fields of other industries (fig. 2.2-16).

High reliability is achieved with a redundant and robust design. All control and protection components from the human-machine interface (HMI), control and protection systems, down to the measuring equipment for DC current and voltage quantities, have been designed to take advantage of the latest software and hardware developments. These control and protection systems are based on standard products with a product lifecycle of 25 years or more.

The name Win-TDC reflects the combination of the PC-based HMI system SIMATIC WinCC and the high-performance industrial control system SIMATIC TDC for Microsoft Windows.

SIMATIC WinCC (Windows Control Center) is used for operator control and monitoring of HVDC systems.

SIMATIC TDC (Technology and Drive Control) is a high-performance automation system which allows the integration of both open-loop and high-speed closed-loop controls within this single system. It is especially suitable for HVDC (and other power electronics applications) demanding high-performance closed-loop control. For extremely fast control functions as required in HVDC PLUS systems, SIMATIC TDC is complemented by the dedicated PLUSCONTROL comprising the fast Current Control System (CCS) and the Module Management System (MMS).

SIMATIC WinCC and SIMATIC TDC are used in a wide range of industrial applications including power generation and distribution.

In Siemens LCC HVDC systems, the DC currents and voltages are measured with a hybrid electro-optical system: DC current with a shunt located at HV potential, DC voltage with a resistive/capacitive voltage divider. Both systems use laser-powered measuring electronics so that only optical connections are made to the ground level controls – this provides the necessary HV isolation and noise immunity.

For HVDC PLUS, the DC currents are measured with a zero flux measuring system, which provides the required accuracy and dynamic response for fast control during grid transients. The zero flux cores are located at ground level on suitable locations, e. g., converter hall bushings or cable sealing ends.

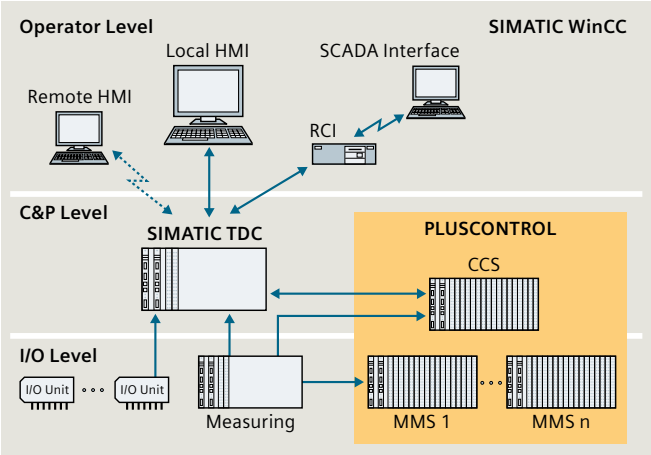

Fig. 2.2-16: Win-TDC hierarchy – More than 30 years of experience are built into the hierarchical Siemens HVDC control system, which is based on standard components most widely used also in other industries

Fig. 2.2-17: The control and protection cubicles are intensively tested in the Siemens laboratories before they are shipped to site, assuring fast and smooth commissioning of the HVDC system

Siemens provides proven hardware and software systems built around state-of-the-art technologies. Their performance and reliability fulfils the most demanding requirements for both new installations and control system replacement (fig. 2.2-17).

Services

The following set of services completes the Siemens HVDC portfolio.

Turnkey service

Experienced staff designs, installs and commissions the HVDC system on a turnkey basis.

Project financing

Siemens is ready to assist customers in finding proper project financing.

General services

Extended support is provided to customers of Siemens from the very beginning of HVDC system planning, including:

- Feasibility studies
- Drafting the specification
- Project execution
- System operation and long-term maintenance
- Consultancy on upgrading/replacement of components/ redesign of older schemes, e. g., retrofit of mercury-arc valves or relay-based controls.

Studies during contract execution are conducted on system engineering, power system stability and transients:

- Load-flow optimization
- HVDC systems basic design
- System dynamic response
- Harmonic analysis and filter design for LCC HVDC
- Insulation and protection coordination
- Radio and PLC interference
- Special studies, if any.

For further information:

siemens.com/energy/hvdc
siemens.com/energy/hvdc-plus

1
2
3
4
5
6
7
8
9
10
11
12
?

2.2.2 Flexible AC transmission systems (FACTS)

Flexible AC Transmission Systems (FACTS) have evolved to a mature technology with high power ratings. The technology, proven in numerous applications worldwide, became a first-rate, highly reliable one. FACTS, based on power electronics, have been developed to improve the performance of AC systems and to make long distance AC transmission feasible, and are an essential part of intelligent grid solutions.

FACTS are available
in parallel connection:
- Static Var Compensator (SVC)
- Static Synchronous Compensator (STATCOM)

or, in series connection:
- Fixed Series Compensation (FSC)
- Thyristor Controlled/Protected Series Compensation (TCSC/TPSC).

Parallel compensation

Parallel compensation is defined as any type of reactive power compensation employing either switched or controlled units that are connected in parallel to the transmission system at a power system node.

Mechanically Switched Capacitors/Reactors (MSC/MSR)
Mechanically switched devices are the most economical reactive power compensation devices (fig. 2.2-18a).
- Mechanically Switched Capacitors (MSC) are a simple but low-speed solution for voltage control and network stabilization under heavy load conditions. They increase the voltage at the point of connection.
- Mechanically Switched Reactors (MSR) have exactly the opposite effect and are therefore preferable for achieving stabilization under low load conditions or installed at the end of long radial lines.
- An advanced form of mechanically switched capacitor is the MSCDN. This device is an MSC with an additional damping circuit for avoidance of system resonances.

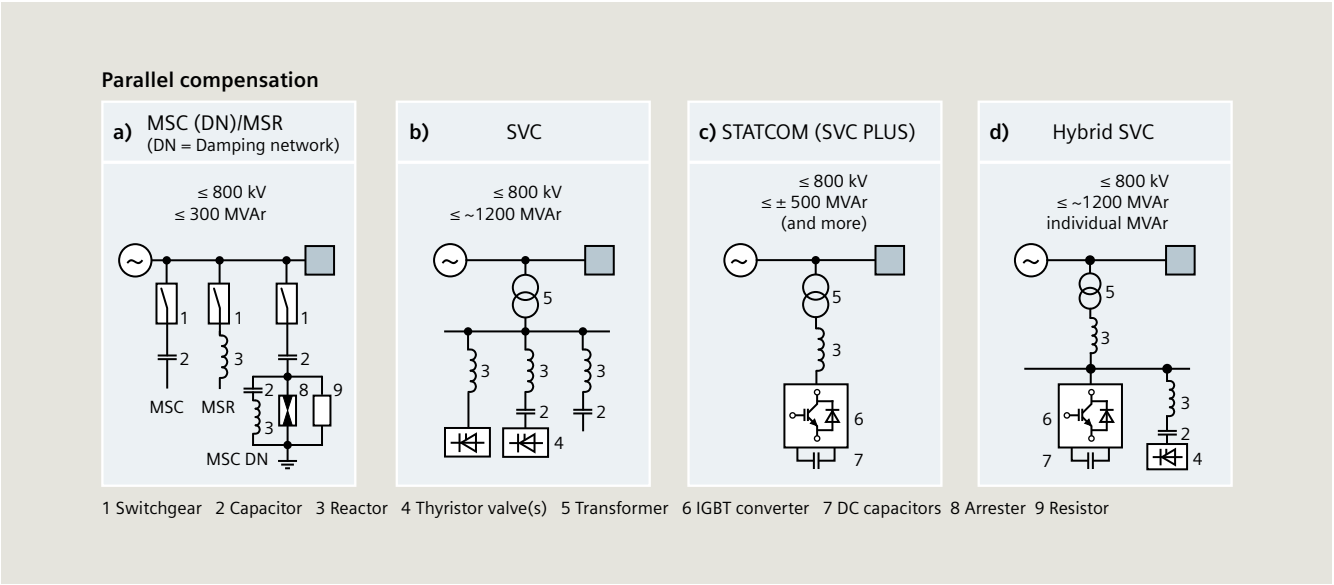

Fig. 2.2-18a: Mechanically switched capacitors (MSC), mechanically switched reactors (MSR) and mechanically switched capacitors with damping network (MSC DN)
Fig. 2.2-18b: Static var compensator (SVC) with three branches (TCR, TSC, filter) and coupling transformer
Fig. 2.2-18c: STATCOM (SVC PLUS) connected to the transmission system
Fig. 2.2-18d: Hybrid SVC connected to the transmission system

Static Var Compensator (SVC)
Static var compensators are a fast and reliable means of controlling voltage on transmission lines and system nodes (fig. 2.2-18b, fig. 2.2-19). The reactive power is changed by switching or controlling reactive power elements connected to the secondary side of the transformer. Each capacitor bank is switched ON and OFF by thyristor valves (TSC). Reactors can be either switched (TSR) or controlled (TCR) by thyristor valves.

When system voltage is low, the SVC supplies capacitive reactive power and rises the network voltage. When system voltage is high, the SVC generates inductive reactive power and reduces the system voltage, in a highly dynamic way.

Static var compensators perform the following tasks:
- Stabilize the voltage level
- Dynamic reactive power control
- Increase in system stability
- Damping of power oscillations
- Unbalance control.

The design and configuration of an SVC, including the size of the installation, operating conditions and losses, depend on the system conditions (weak or strong), the system configuration (defined by network studies) and the tasks to be performed.

SVC PLUS – new generation of STATCOM
SVC PLUS is an advanced STATCOM which uses Voltage-Sourced Converter (VSC) technology based on Modular Multilevel Converter (MMC) design.
- MMC provides a nearly ideal sinus-shaped waveform on the AC side. Therefore filtering is normally not required.
- MMC allows for low switching frequencies, which reduces system losses.
- SVC PLUS uses robust, proven standard components, such as typical AC power transformers, reactors and standard IGBTs.
- Using SVC PLUS solutions with small operating ranges will result in significant space savings in comparison to a conventional SVC installation.

Applications
SVC PLUS with its superior undervoltage performance fulfills the same task as conventional SVCs. Due to the advanced technology, SVC PLUS is the preferred solution for grid access solutions (e. g. wind farms).

Modular system design
The modular SVC PLUS is equipped with industrial class IGBT (Insulated Gate Bipolar Transistors) power modules and DC capacitors.
- A very high level of system availability, thanks to the redundancy of power modules.
- Standard SIMATIC TDC control and protection hardware and software are fully proven in practice in a wide range of applications worldwide.

Fig. 2.2-19: Static Var Compensator (SVC) installation

Fig. 2.2-20: SVC PLUS units in New Zealand

Fig. 2.2-21: Site view SVC PLUS in Australia

Portfolio
- Standardized configurations are available: ±25, ±35 and ±50 MVAr as containerized solutions. Up to four of these units can be configured as a fully parallel operating system.
- Easily expendable and relocatable.
- Open rack modular system configuration (in a building) allows for operating ranges of ±500 MVAr and more.
- Hybrid SVCs comprise a combination of both, multilevel STATCOM and conventional thyristor based SVC technology. Hybrid SVCs can be flexibly designed for an unsymmetrical control range, are highly dynamic and do not require any additional filter. This leads to a space optimized design and reduced system losses.

1
2
3
4
5
6
7
8
9
10
11
12
?

Series compensation

Series compensation is defined as insertion of reactive power elements into transmission lines. The most common application is the fixed series capacitor (FSC). As technically advanced options thyristor-valve controlled systems (TCSC) and thyristor-valve protected systems (TPSC) may also be installed.

Fixed Series Capacitor (FSC)

The simplest and most cost-efficient type of series compensation is provided by FSCs. FSCs comprise the actual capacitor banks, and for protection purposes, parallel arresters (metal-oxide varistors, MOVs), spark gaps, and a bypass switch for isolation purposes (fig. 2.2-23a).

Fixed series capacitor provides the following benefits:

- Increase in transmission capacity
- Reduction in transmission angle
- Increase in system stability.

Thyristor-Controlled Series Capacitor (TCSC)

Reactive power compensation by means of TCSCs can be adapted to a wide range of operating conditions. In this configuration, a TCR is connected in parallel to the capacitor bank. This allows to tune the overall system impedance of the TCSC according to the varying stystem operation conditions during dynamic disturbances.

Additional benefits of thyristor-controlled series capacitor:

- Damping of power oscillations (POD)
- Load flow control
- Mitigation of sub-synchronous resonances (SSR).

Thyristor-Protected Series Capacitor (TPSC)

An enhanced configuration of the FSC is the TPSC. In this case, high-power thyristors in combination with a current-limiting reactor are installed in parallel to the series capacitors, and substitute the spark gap as well as the MOVs as protection devices. The protection of the power capacitor is performed by firing a bypass of the thyristors valves. Due to the very short cooling-down times of the special thyristor valves, TPSCs can be quickly returned to service after a line fault, allowing the transmission lines to be utilized to their maximum capacity. TPSCs are the first choice whenever transmission lines must be returned to maximum carrying capacity as quickly as possible after a failure (fig. 2.2-23c).

Fig. 2.2-22: View of a TCSC system

Series compensation

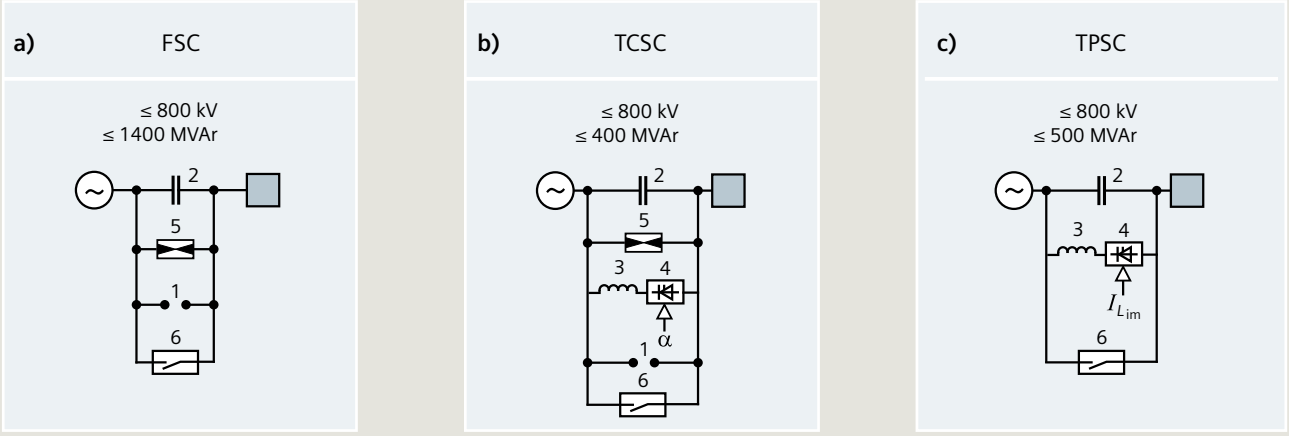

1 Spark gap 2 Capacitor 3 Reactor 4 Thyristor valve(s) 5 Arrester 6 Circuit-breaker

Fig. 2.2-23a: Fixed series capacitor (FSC) connected to the network
Fig. 2.2-23b: Thyristor-controlled series capacitor (TCSC) connected to the network
Fig. 2.2-23c: Thyristor-protected series capacitor (TPSC) connected to the network

For further information please contact the Customer Support for Power & Energy:

Tel.: +49 180 524 70 00
E-Mail: support.energy@siemens.com
siemens.com/csc

1
2
3
4
5
6
7
8
9
10
11
12
?

Synchronous condenser

Synchronous condenser solutions are being "reintroduced" worldwide to support today's transmission system requirements. The addition of renewables-based power generation to the energy mix, phase-out of conventional power plants, new HVDC systems, and the extension of power grids to remote areas influence the stability of transmission systems. Hence, the installation of synchronous condenser solutions has become necessary to provide sufficient support to the transmission systems.

Benefits of synchronous condensers

- Provision of short-circuit power and inertia
- Steady-stage and dynamic voltage control
- Reactive power control of dynamic loads.

A synchronous condenser solution generally consists of a synchronous generator connected to the high-voltage transmission system via a step-up transformer. The synchronous generator is started up and braked with a frequency-controlled electric motor (pony motor) or a starting frequency converter. When the generator has reached operating synchronous speed depending on the system frequency, it is automatically synchronized with the transmission system, and the machine is operated as a motor providing reactive and short-circuit power to the transmission system.

The generator is equipped with either a brushless exciter or with a conventional static exciter with brushes. The two solutions have different characteristics with respect to dynamic behaviors, and are selected according to the project requirements. Contrary to power-electronics-based static var compensators (SVCs), a synchronous condenser features the major advantages of injecting large amounts of short-circuit power and providing inertia due to its rotating mass.

Synchronous condensers offered as tailor-made turnkey solutions are based on proven, reliable in-house equipment, extensive know-how on transmission system requirements, and project execution experience. Siemens supplies a broad range of generators up to 1,300 MVA at nominal frequency. The generators are based on air-, hydrogen- or water-cooled technologies.

Applications

1. Stabilization of grids with high amounts of wind energy infeed

The synchronous condenser provides the transmission system with short-circuit power and reactive power control to operate the transmission system including an infeed of large amounts of wind power.

2. Support of HVDC Classic under weak system conditions

The synchronous condenser can increase the short-circuit power of weak systems. Furthermore it can improve the phase angle stability of the AC system by providing an additional rotating mass (increase in inertia time constant).

Fig. 2.2-24: Synchronous generator

Fig. 2.2-25: Synchronous condenser in Bjaeverskov, Denmark

Fig. 2.2-26: Synchronous condenser building of the HVDC Black Sea Transmission Network, Georgia

1
2
3
4
5
6
7
8
9
10
11
12
?

2.2.3 Grid access solutions

Grid access solutions are custom-engineered solutions for decentralized generating units and remote loads. They are an essential part of intelligent grid solutions. Grid access solutions involve reconciling contrasting parameters, such as high reliability, low investment costs, and efficient transmission in the best possible solution (fig. 2.2-27). For example, in the design of high-voltage offshore platforms for offshore wind farm connections to the grid, optimizing the entire system with the best possible specification of medium- and high-voltage equipment to balance lifecycle costs, performance and electrical losses, and meeting local grid code requirements.

Turnkey proposition and project execution

By offering a turnkey solution, Siemens provides a holistic approach to complex projects involving project management; design and engineering services; subcontracting; procurement and expediting of equipment; inspection of equipment prior to delivery; shipment; transportation; control of schedule and quality; pre-commissioning and completion (fig. 2.2-28); performance guarantee testing; and training of owner's operating and/or maintenance personnel.

For both AC and DC transmission technologies, Siemens offers a broad range of solutions. The technical constraints associated with generator and load connections with AC or DC transmission systems are well known and addressed accordingly. The engineering expertise of Siemens is all inclusive from the conceptual and basic design to digital and real-time simulations, therefore assuming responsibility for presenting the solution to the grid owner which is essential in executing such projects.

Fig. 2.2-27: A comprehensive overview for both AC and DC offshore wind farm grid connections

System and design studies, engineering

Siemens is uniquely placed in having a full in-house engineering competence, from the initial system studies work through to primary and secondary engineering and platform design/management competence. Siemens utilizes its in-house capabilities, and complements them with external consultants / sub-contractors, where required, to ensure that the end solution is fully integrated, keeping the highest quality and industrial health and safety standards.

In order to achieve the important steps towards the final design, Siemens establishes an optimized economical network within a system of generating units, integrates this system within the grid, defines and configures the grid components, and carries out load flow studies and short-circuit calculations for the entire system. All of these critical activities are performed and managed in-house.

Moreover, an earthing concept and coordination of the insulation for the complete grid connection must also be defined. The static and dynamic characteristics must be checked, and the reactive power compensation defined (static and dynamic). The resonance phenomenon for all elements should be investigated, from the transmission system itself to cables, transformers, reactors, wind turbines, and capacitor banks. Compatibility and conformity with grid code requirements must be established, as well as a control and protection system.

High-voltage offshore platform

In the offshore wind industry, the word 'platform' reflects two construction entities, namely the 'topside' where all the high-voltage, medium-voltage and operational equipment are installed, and the sub-structure which serves as the base for the topside (fig. 2.2-29). Additionally, the foundation (the structure below ground / seabed) is a critical element that is selected depending on various technical parameters. Siemens offers optimized designs for both entities by utilizing its experience in the substations, offshore and construction industries.

Generally, the topside contains all the equipment needed to ensure that the power can be transmitted to the shore line efficiently, along with all other services required given that the topside will be placed at a significant distance from shore.

Within the product portfolio of Siemens, the engineers have developed solutions tailored to market demands and suitable for a wide range of projects. Early engagement and collaborative efforts with system operators means that Siemens is able to adapt and implement the solutions in the most efficient manner for their projects.

1
2
3
4
5
6
7
8
9
10
11
12
?

Fig. 2.2-28: Siemens executes projects as an EPC contractor

Offshore substation platform design

Offshore Transformer Module (OTM®)
Siemens has taken the lead in utilizing its expertise in power generation and grid access to innovate its portfolio. This innovation enables Siemens to reduce both capital and operational expenditure, so that system operators can be assisted to achieve the goal of reducing the levelized cost of energy to €0.10/kWh by 2020.

Using Siemens' unique experience, the innovative Offshore Transformer Module (OTM), is an optimized solution which reduces complexity and lowers the costs of transmitting offshore renewable energy to shore. Siemens invested in this distributed substation concept to reduce both weight and costs, optimize construction schedules, and improve operation and maintenance.

This innovative solution is based on the concept of two smaller and significantly lighter platform modules to replace the single large platforms currently deployed. The solution allows for the connection of the same rated power in total. The transmission capability of an OTM substation is dependent upon the capacity of the export cable circuit; typically, this is in the range of 350 MW per cable circuit. For the majority of installations, this means that two OTM modules would be installed instead of a larger complex single substation.

The cable deck utilizes the existing transition piece with a small cantilever providing room to perform cable installation work prior to routing into the equipment on the deck above. Self-contained modular units including high- and medium-voltage switchgear as well as control and protection reduce project execution time and offer the ability for unit replacement. Optimized transformers use a fan-less cooling system and synthetic ester oil minimizing fire risk and ensuring an environmentally friendly, low-maintenance solution.

Through innovation and reducing complexity, the OTM has an installed weight of less than 700 t – for a 250 MW unit – resulting in substantial cost savings, especially in transportation and installation, by utilizing the existing vessels already being used in the wind farm construction.

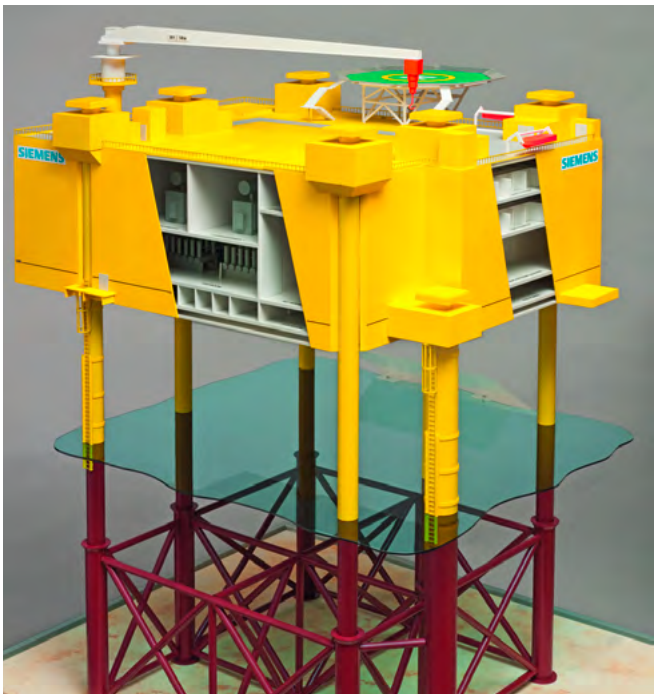

Fig. 2.2-29: Siemens supplies comprehensive offshore grid connection solutions with flexible substation configurations for both AC and DC applications

Given this light weight, it is now possible to deploy an OTM solution along with a turbine on a common sub-structure. This has an overall benefit to the project by optimizing the number of foundations and ensuring that all foundations across the whole wind farm asset can be more uniform. For those projects where a system operator does not choose for integration, the OTM can be deployed independently on its own substructure and foundation.

Ultimately, the utilization of distributed substations significantly lowers construction costs, ensures faster commissioning, and enables the owners to secure revenue streams earlier. The Siemens offshore transformer module is a major contribution to the reliable and affordable supply of renewable energy, helping system operators to achieve their goal of reducing costs for offshore wind power to less than €0.10/kWh by 2020.

1
2
3
4
5
6
7
8
9
10
11
12
?

References

Fig. 2.2-30: The offshore wind farm Lillgrund, consisting of 48 wind turbines, each 2.3 MW, from Siemens, is installed in Oresund. Its location is on Swedish national waters, roughly 7 km away from the Swedish coast line near to the City of Malmö. The owner is Vattenfall AB, Sweden. The 33/138 kV transformer substation with its 120 MVA transformer is mounted on an offshore platform located within the wind farm area. Power transmission is realized via one three-phase 138 kV XLPE submarine cable towards the existing substation in Bunkeflo (Sweden).

Besides the transformer substation on the platform, Siemens performed the grid studies as well as the design and performance studies for the entire wind farm and its grid connection.

In service since late 2007, the Lillgrund Offshore Wind Farm provides enough energy for approximately 80,000 homes and reduces the CO_2 emissions by 300,000 tons a year.

Fig. 2.2-31: The offshore wind farms Lynn and Inner Dowsing, consisting of 54 wind turbines, each 3.6 MW, from Siemens, are located in the Greater Wash area, on Great Britain national waters. This is roughly 5 km away from the coast line of Skegness, Lincolnshire. The owner is Centrica Renewable Energy Ltd., U.K.

The 33 / 132 kV onshore transformer substation with its two 100 MVA transformers is located at Middle Marsh, approximately 5 km away from the sea wall. Power transmission from the offshore wind farms is realized via six submarine three-phase 33 kV XLPE cables. Further on to the grid, two 132 kV cables are used. Besides the transformer substation and the cable system, Siemens also performed the grid studies as well as the design and performance studies for the entire wind farm and its grid connection.

The grid connection was energized in January 2008. Both wind farms were in full service in autumn 2008. They provide enough energy for approximately 130,000 homes, and reduce the CO_2 emissions by 500,000 tons.

Fig. 2.2-32: The Thanet Offshore Wind Farm, consisting of 100 wind turbines, each 3 MW, from Vestas (Denmark), is located in the North Sea. It is roughly 11 km away from the coast line of Kent, Foreness Point. The owner is Thanet Offshore Wind Ltd., U.K.

The 33 / 132 kV transformer substation with its two 180 MVA transformers is mounted on an offshore platform located within the wind farm area. Power transmission is realized via two three-phase 132 kV XLPE submarine cables. The point of coupling to the grid is a specific switchgear in Richborough, Kent.

Fig. 2.2-30: 2007 110 MW Offshore Wind Farm Lillgrund, Sweden

Fig. 2.2-31: 2008 180 MW Offshore Wind Farm Lynn / Inner Dowsing, UK

Fig. 2.2-32: 2009 300 MW Offshore Wind Farm Thanet, UK

1
2
3
4
5
6
7
8
9
10
11
12
?

Apart from the offshore transformer substation, the onshore substation with its compensation systems (two SVC PLUS) and harmonic filters, as well as the cable system, Siemens also performed the grid studies as well as the design and performance studies for the entire wind farm and its grid connection.

The grid connection was energized in autumn 2009, with all 100 wind turbines running by autumn 2010. Now the offshore wind farm provides enough energy for approximately 215,000 homes, and reduces the CO_2 emissions by 830,000 tons a year.

Fig. 2.2-33: The Greater Gabbard offshore wind farm, planned with 140 wind turbines, each 3.6 MW, from Siemens (Denmark), is located in the North Sea close to the Thames Estuary. It is roughly 26 km (respective 46 km) away from the coast line of Suffolk.

The owner is Greater Gabbard Offshore Winds Ltd., U.K. The 33/132 kV transformer substation with its three 180 MVA transformers is mounted on two offshore platforms (Inner Gabbard and Galloper) located within the wind farm area. Power transmission is realized via three three-phase 132 kV XLPE submarine cables.

The point of coupling to the grid is realized in Sizewell Village, Suffolk, where Siemens built a reactive power compensation substation to allow the wind farm to meet the requirements of the GB grid code. SVC PLUS multilevel technology is used for all of the three export circuits.

Here again, Siemens performed the grid studies as well as the design and performance studies for the entire wind farm.

Now the offshore wind farm provides enough energy for approximately 350,000 homes and reduces the CO_2 emissions by 1,350,000 tons a year.

Fig. 2.2-34: In September 2009, Siemens was awarded a contract for the first phase of the offshore grid access solution to the prestigious London Array wind farm.

The grid access project was completed in two phases. In phase one, two offshore substations (each with two 150 MVA transformers) will be delivered to collect the 630 MW of power generated from 175 wind turbines – also supplied by Siemens – before transferring it to shore via the main 150 kV export cables.

Siemens is responsible for the turnkey construction of the onshore substation. As for the two offshore substations, Siemens is responsible for the overall layout design to ensure that the facility functions as a substation, including all primary and secondary equipment as well as testing and commissioning.

Fig. 2.2-33: 2010 500 MW Offshore Greater Gabbard, UK

Fig. 2.2-34: 2012 630 MW London Array, UK

Situated 24 km from Clacton-on-Sea, Essex, the system will generate 1,000 MW of green power, enough to supply the electricity needs for nearly 600,000 homes across the South East of England, and will be the largest offshore wind farm in the world in 2012.

For further information please contact the Customer Support for Power & Energy:

Tel.: +49 180 524 70 00
E-Mail: support.energy@siemens.com
siemens.com/csc

1
2
3
4
5
6
7
8
9
10
11
12
?

BorWin2

800 MW offshore HVDC PLUS link BorWin2, Germany
For the BorWin2 project, Siemens supplied the voltage-sourced converter (VSC) system – using Siemens HVDC PLUS technology – with a rating of 800 MW. The wind farms Veja Mate and Global Tech 1 are designed to generate 800 MW and are connected through Siemens' HVDC PLUS link to shore. The converter is installed on an offshore platform, where the voltage level is stepped up and then converted to ±300 kV DC. The platform accommodates all electrical equipment required for the HVDC converter station, two transformers, four AC cable compensation reactors, and high-voltage gas-insulated switchgear (GIS). The Siemens offshore substation is built on a floating, self-lifting platform. Power is transmitted via subsea and land cable to Diele close to Papenburg, where an onshore converter station will reconvert the DC back to AC and feed it into the 380 kV AC network.

Fig. 2.2-35: BorWin 2, 800 MW HVDC PLUS, North Sea

HelWin1

576 MW offshore HVDC PLUS link HelWin1, Germany
For the project HelWin1, Siemens supplied a voltage-sourced converter (VSC) system with a rating of 576 MW using Siemens HVDC PLUS technology. The wind farms Nordsee Ost and Meerwind are designed to generate 576 MW and are connected through a Siemens' HVDC PLUS link to shore. The converter is installed on an offshore platform, where the voltage level is stepped up and then converted to ±250 kV DC. The platform accommodates all the electrical high-voltage AC and DC equipment required for the converter station. Similar to the BorWin2 project, the Siemens offshore substation is also built on a floating, self-lifting platform. Energy is transmitted via subsea and land cable to Büttel, northwest of Hamburg, Germany, where an onshore converter station reconverts the DC back to AC and transmits it into the high-voltage grid.

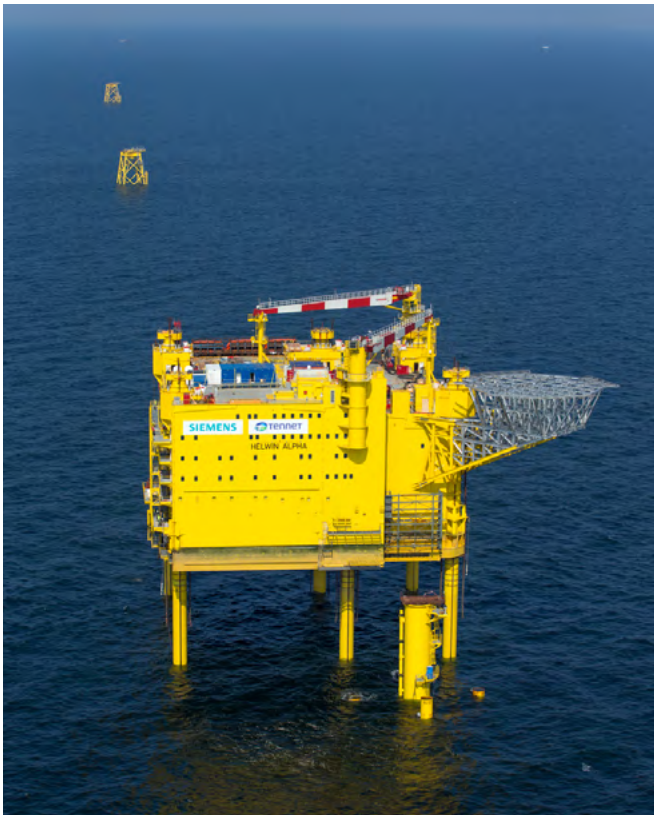

Fig. 2.2-36: HelWin 1, 576 MW HVDC PLUS, North Sea

1
2
3
4
5
6
7
8
9
10
11
12
?

SylWin1

864 MW offshore HVDC PLUS link SylWin1, Germany
Siemens supplied the world's largest voltage-sourced converter (VSC) offshore system with a rating of 864 MW for the SylWin1 project. Siemens' HVDC PLUS link connects the Dan Tysk wind farm to the German shore. The converter is installed on an offshore platform, where the voltage level is stepped up and converted to ±320 kV DC. The platform accommodates all electrical equipment required for the HVDC converter station: two transformers, four AC cable compensation reactors, and high-voltage gas-insulated switchgear (GIS). Similar to the BorWin2 and HelWin1 projects, the Siemens offshore substation is built on a floating, self-lifting platform. The energy is transmitted via subsea and land cable to Büttel, where an onshore converter station reconverts the DC to AC and feeds it into the 380 kV AC grid.

Fig. 2.2-37: SylWin 1, 864 MW HVDC PLUS, North Sea

HelWin2

690 MW offshore HVDC PLUS link HelWin2, Germany
Siemens in consortium with the Italian cable manufacturer Prysmian erected HelWin 2, the link between the North Sea offshore windfarm Amrumbank West and the onshore grid. The customer is TenneT TSO GmbH of Bayreuth, Germany. The grid connection, designed as a high-voltage direct-current transmission link, has a rating of 690 MW. Amrumbank West is built in the North Sea, about 55 km from the mainland, 35 km north of Helgoland, and 37 km west of the North Frisian island of Amrum. The wind farm has a power capacity between 300 and 400 MW. Together with the Meerwind and North Sea East offshore windfarms, Amrumbank West is part of the North Sea cluster HelWin.

Fig. 2.2-38: HelWin 2, 690 MW HVDC PLUS, North Sea

2.2.4 Power transmission lines

Gas-insulated transmission lines

Gas-insulated transmission lines (GIL) offer high power underground solutions in cases where overhead lines are not suitable. GIL are a compact solution for high power transmission. They provide the following technical features:

- High-power ratings (transmission capacity up to 3,700 MVA per system)
- High overload capability
- Auto-reclosing functionality without overheating risk
- Suitable for long distances (70 km and more without compensation of reactive power)
- High short-circuit withstand capability (even in the theoretical case of internal arc faults)
- Possibility of direct connection to gas-insulated switchgear (GIS) and gas-insulated arresters without cable entrance fitting
- Non-flammable; no fire risk in case of failures
- Lowest electromagnetic field.

History / Siemens' experience

When SF_6 was introduced in the 1960s as an insulating and switching gas, it became the basis for the development of gas-insulated switchgear. On basis of the experience collected with GIS, Siemens started to develop SF_6 gas-insulated lines to transmit electrical energy. The aim was to create alternatives to air-insulated overhead lines with decisively smaller clearances. In the early 1970s, initial projects were implemented. More installations in tunnels and above ground followed. In the course of product optimization, the initially used insulating medium SF_6 was replaced by a gas mixture where the majority of the insulating gas is nitrogen, a non-toxic natural gas. Only a comparatively small portion of sulfur hexafluoride (SF_6) is still needed. Thus, the way was free for environmentally friendly long transmission projects with GIL. The latest innovation of Siemens GIL is the directly buried laying technique, which was a further milestone for compact long distance transmission with GIL. The first Siemens GIL is shown in fig. 2.2-39.

Challenges now and in the future

Continuously growing world population and urbanization lead to a strongly increased demand for bulk power transmission at extra high voltage, right into the heart of cities. At the same time, the available space for transmission systems has been restricted more and more, and environmental requirements such as electromagnetic fields (EMF, see fig. 2.2-40) and fire protection have gained increased importance. GIL fulfil these requirements perfectly. Meawhile power generation is undergoing a conceptual change as well. As natural resources are limited, regenerative power generation is becoming more important. Offshore wind farms and solar power plants are being installed, providing a huge amount of energy at remote places. Consequently, transmission systems are needed which allow to transport this bulk power with utmost reliability and with the least possible losses.

Fig. 2.2-39: GIL arrangement in the tunnel of the pumped-storage power plant in Wehr, Southern Germany (4,000 m length; in service since 1975)

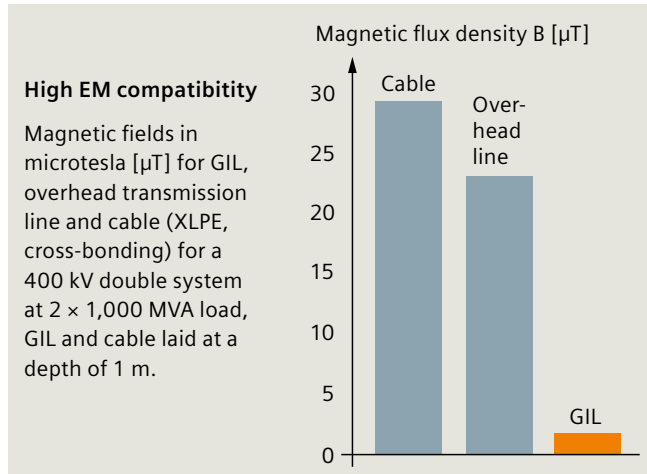

Fig. 2.2-40: A comparison of the magnetic fields for different high-voltage transmission systems

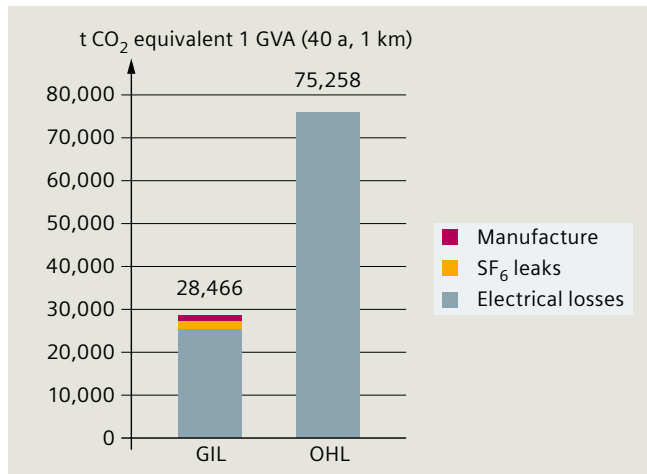

Fig. 2.2-41: Overall CO_2 impact of different transmission systems (one system)

1
2
3
4
5
6
7
8
9
10
11
12
?

The transmission systems of the future will be measured by their overall CO_2 balance, asking for the minimum possible environmental impact from production of the equipment through operational while in service until its end of service life. Due to its properties and low losses, the overall CO_2 impact of GIL is clearly lower than that of traditional overhead-lines, proving the GIL's environmental friendliness (see fig. 2.2-41).

Reliable technology
The gas-insulated transmission line technology is highly reliable in terms of mechanical and electrical design. Experience over the course of 35 years shows that after a GIL system is commissioned and in service, it runs safely without dielectrical or mechanical failures. Consequently, Siemens GIL – in service for decades – did not have to undergo their initially planned revision after more than 40 years of operation. CIGRE long-time investigations on gas-insulated systems found that no ageing effect occur. All of the Siemens GILs installed since 1975 have been in operation until today. In total, about 100 km phase length.

Basic design
In order to meet electrical and mechanical design criteria, gas-insulated lines have considerable cross-sections of enclosure and conductor, which ensures high-power transmission ratings and low losses. Because of the geometry and the gaseous insulating medium, the systems create only low capacitive loads, so that compensation of reactive power is not needed, not even for longer distances. The typical technical data of the GIL are shown in table 2.2-2.

Testing
GIL systems are tested according to the international standard IEC 62271-204 "Rigid high-voltage, gas-insulated transmission lines for voltages of 72.4 kV and above".

The long-term performance of GIL has been proven by tests at the independent test laboratory IPH, Berlin, Germany, and the former Berlin power utility BEWAG (now ELIA). The test pattern was set by adopting long-term test procedures for high-current (fig. 2.2-42) and high-voltage tests (fig. 2.2-43). The long-term test procedure consisted of load cycles at rated current and doubled voltage rating as well as frequently repeated high-voltage tests. The results confirmed the meanwhile more than 40 years of field experience with GIL installations worldwide. The Siemens GIL was the first in the world to have passed these long-term tests without any problems. fig. 2.2-42 shows the test setup arranged in a tunnel of 3 m diameter.

Fault containment
Tests have proven that the arcing behavior of GIL is excellent. It is even further improved by using mixed-gas insulations. Consequently, there would be no external damage or fire caused by an internal fault.

Fig. 2.2-42: Long-term test setup at IPH, Berlin

Fig. 2.2-43: Siemens lab sample for dielectric tests

Technical data short-circuit capacity 63 kA	
Rated voltage	Up to 550 kV
Rated current	up to 5,000 A
Transmission capacity	up to 3,700 MVA
Capacitance	≈ 60 nF / km
Length	up to 70 km
Gas mixture SF_6/N_2	20 % / 80 % (400 kV), 60 % / 40 % (500 kV)
Laying	Directly buried
	In tunnels, sloping galleries, vertical shafts
	Open-air installation, above ground

Table 2.2-2: Technical data of GIL

1
2
3
4
5
6
7
8
9
10
11
12
?

Electromagnetic compatibility allows flexible route planning
The construction of the GIL results in much smaller electromagnetic fields than with conventional power transmission systems. A reduction by a factor of 15 to 20 can be achieved. This makes GIL suitable to follow new routings through populated areas (e.g., next to hospitals or residential areas, in the vicinity of flight monitoring systems, etc.). GIL can be laid in combined infrastructure tunnels together with foreign elements (e.g., close to telecommunication equipment and similar). Thus, GIL provides maximum flexibility for the planning of transmission systems, in EMC-sensitive environments where magnetic fields have to be avoided. Siemens GIL systems can satisfy the most stringent magnetic flux density requirements, for example, the Swiss limit of 1 µT (fig. 2.2-40).

Jointing technique
In order to perfectionize gas tightness and to facilitate laying of long straight lines, flanges may be avoided as a jointing technique. Instead, welding the various GIL construction units ensures highest quality (fig. 2.2-44). Siemens' welding process is highly automated by using orbital welding machines. This as well contributes to high productivity in the welding process and a short overall installation time. To ensure quality, the welds are controlled by a new sophisticated ultrasonic testing system which exceeds even X-ray test standards.

Laying
During the installation process, climatic influences such as rain, dust, seasons of the year, etc. need to be taken into account. To meet Siemens' requirements for cleanness and quality, the laying techniques of GIL differ from pipeline technology. To protect the assembly area against dust, particles, humidity and other environmental factors, a temporary installation tent is set up for the installation period. In this way, working conditions are created which meet the standards of modern GIS factories. After the GIL is installed, these supporting installations are removed completely, and the entire area is re-naturalized. Thus, GIL are well suitable for use in environmentally protected areas. Due to the small width of GIL routes, the system is specifically compatible with the landscape.

Above ground installation
GIL installation above ground is a trouble-free option for use in properties with restricted public access. The open air technology is proven under all climatic conditions in numerous installations all over the world. GIL are unaffected by high air ambient temperatures, intensive solar radiation, or severe atmospheric pollution (such as dust, sand or moisture). Due to the use of corrosion-resistant alloys, corrosion protection can be omitted in most application cases (fig. 2.2-45).

Fig. 2.2-44: Orbital welding of GIL pipes

Fig. 2.2-45: Above ground installation

Fig. 2.2-46: GIL tunnel installation, Munich, Germany

Tunnel installation
Tunnels made up of prefabricated structural elements provide a quick and easy method of GIL installation especially in densely populated areas. The tunnel elements are assembled in a dig-and-cover trench, which is backfilled immediately. The GIL is installed once the tunnel has been completed. Thus, the open trench time is minimized. With this method of installation, the land above the tunnel can be fully restored to other purpose of use (fig. 2.2-46).

1
2
3
4
5
6
7
8
9
10
11
12
?

Vertical installation
Gas-insulated tubular lines can be installed without problems at any gradient, even vertically. This makes them a top solution especially for cavern power plants, where large amounts of energy have to be transmitted from the bottom of the cavern (e.g., the machine transformer / switchgear) to the surface (overhead line). As GIL systems pose no fire risk, they can be integrated without restriction into tunnels or shafts that are accessible to man, and can also be used for ventilation at the same time. Thus, cost for tunnelling works can be reduced clearly.

The use of GIL in hydro power plant projects with the highest demand on reliability for transporting electricity of 3,900 MVA of power safely and efficiently from the dam to the population centers is becoming of more importance.

Direct burying
Especially when used in lesser populated areas, directly buried GIL are a perfect solution. For that purpose, the tubes are safeguarded by a passive and active corrosion protection. The passive system comprises a HDPE coating which ensures at least 40 years of protection. The active system additionally provides cathodic DC protection potential for the aluminum tubes. Magnetic fields measured at the surface above the line are minimal. The high transmission power of GIL minimizes the width of trenches. The land consumption is lower by approx. 1/3 related to comparable cable installations (fig. 2.2-47).

References
Siemens has gained experience with gas-insulated transmission lines at rated voltages of up to 550 kV, and with phase lengths totalling about 100 km (2016). Implemented projects include GIL in tunnels, sloping galleries, vertical shafts, open-air installations, as well as directly buried. Flanging as well as welding has been applied as jointing technique.

The first GIL stretch built by Siemens was the connection of the turbine generator pumping motor of the pumped storage power plant of Wehr in the Black Forest in Southern Germany with the switchyard. The 420 kV GIL is laid in a tunnel through a mountain and has a single-phase length of ~4,000 m (fig. 2.2-39). This connection was commissioned in 1975. One of the later installations is the Limberg II pumped-storage power plant in Kaprun, Austria, which was commissioned in 2010. Here, a GIL system was laid in a shaft with a gradient of 42°. It connects the cavern power plant with the 380 kV overhead line at an altitude of about 1,600 m. The GIL tunnel is used for ventilation purposes, and serves for emergency exit as well. That resulted in substantial cost reduction by eliminating the need for a second shaft in this project (fig. 2.2-49).

Fig. 2.2-47: Directly buried GIL

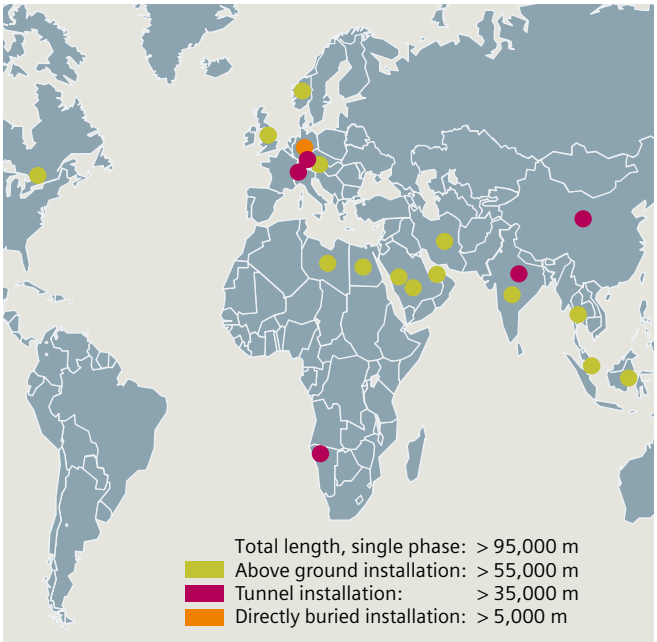

Fig. 2.2-48: References: Gas-insulated transmission lines, status 2016

Fig. 2.2-49: GIL laid in shaft with 42° gradient (Limberg, Kaprun, Austria)

1
2
3
4
5
6
7
8
9
10
11
12
?

A typical example for a city link is the PALEXPO project in Geneva, Switzerland. A GIL system in a tunnel substitutes 500 m of a former 300 kV double circuit overhead line, which had to move for the raised exhibition centre building. The line owner based his decision to opt for a GIL over a cable solution on the GIL's much better values with respect to EMC. Thus, governmental requirements are met, and high sensitive electronic equipment can be exhibited and operated in the new hall without any danger of interference from the 300 kV connection located below it (fig. 2.2-50).

A typical example for a directly buried GIL is the reference project at Frankfurt Airport in Kelsterbach, which was commissioned in April 2011. The GIL solution allows to continue one phase of the OHL in one phase of GIL, thus reducing the size of both trench and transition area at the connection points (fig. 2.2-47).

Typical examples for vertically installed GIL are the hydro power plant projects Xiluodu and Jinping in China energized in 2013. Xiluodu (fig. 2.2-51) is the longest vertically installed GIL having an average vertical distance of more than 460 m from turbines in the power cavern to the overhead transmission lines on top of the dam. In total, 12 km of welded GIL were installed divided on 7 GIL systems.

At Jinping (fig. 2.2-52), the world's tallest hydro power plant (HPP) dam, three GIL systems from Siemens span 230 m vertical shafts. For this project, Siemens had to demonstrate its capability of mastering extremely difficult site conditions, and at the same time accelerate the installation to meet the energization target for the HPP.

Direct current compact transmission lines (DC CTL)

The next development step is for high voltage DC gas-insulated transmission lines. Together with the converter station, the DC technology offers the full control over the electric power transmission in both directions of power flow.

The DC CTL is the technical solution from Siemens, which is currently under development. The high power system shall be designed for 550 kV and up to 5,000 A.

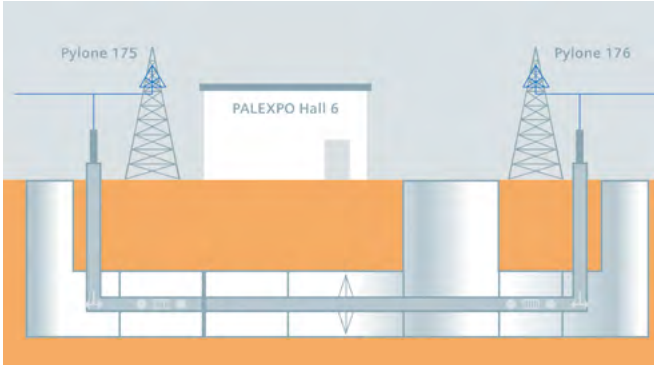

Fig. 2.2-50: GIL replacing overhead line (Palexpo, Geneva, Switzerland)

Fig. 2.2-51: Vertically installed GIL in Xiluodu, China

Fig. 2.2-52: Jinping, China, the world's tallest HPP dam

For further information please contact the Customer Support for Power & Energy:

Tel.: +49 180 524 70 00
E-Mail: support.energy@siemens.com
siemens.com/csc

1
2
3
4
5
6
7
8
9
10
11
12
?

High-voltage power cables

Cables intended for the transmission and distribution of electrical energy are mainly used in power plants, in distribution systems and substations of power supply utilities, and in industry. Standard cables are suitable for most applications. They are preferably used where overhead lines are not suitable. Cables exhibit the following differences to gas-insulated transmission lines (GIL):

- For operating voltages up to 220 kV, as well as where the rated design current is below ~2,500 A, the investment costs for the primary cable equipment are lower than for other underground transmission systems.
- The installation time at site is comparatively short, as long cable lengths (e.g., up to 800 m – or even higher depending on cable design) can be delivered on one drum, which significantly reduces jointing and installation times.
- During cable laying, the open-trench-times for earth-buried systems are comparatively short.
- Cables do not contain any unbound climate-damaging SF_6 gas.
- The costs of de-installation of a cable plant are significantly lower; a high level of recycling is possible.

Basic design

There is a variety of high-voltage cables with different design and voltage levels (fig. 2.2-53).

Cable joints connect lengths of cables in long transmission routes or at points of repair (example see fig. 2.2-55).

Sealing ends form the termination points of a cable, and serve as a connection to switchgear, transformers and overhead lines. Fig. 2.2-54 shows the different types of cable accessories, fig. 2.2-56 an example of an outdoor sealing end.

Siemens offers vendor-neutral consulting and evaluation of cable manufacturers, and procurement of high-voltage cables and accessories, adapted in case of application. The factories of the cable manufacturers are audited by Siemens chief engineers taking under consideration all relevant DIN VDE and IEC standards. In addition, the following engineering tasks can be performed by specialists from Siemens.

Engineering

For operation, cable and accessories must comply with electrical requirements, and have to satisfy ambient conditions which can differ significantly depending on location, ground, indoor or outdoor.

For save project planning of cable installations, the cross-section of the conductor shall be determined such that the requirement current-carrying capacity $I_z \geq$ loading I_b is fulfilled for all operating conditions which can occur. A distinction is made between the current-carrying capacity

- for normal operation
- and for short circuit (operation under fault conditions).

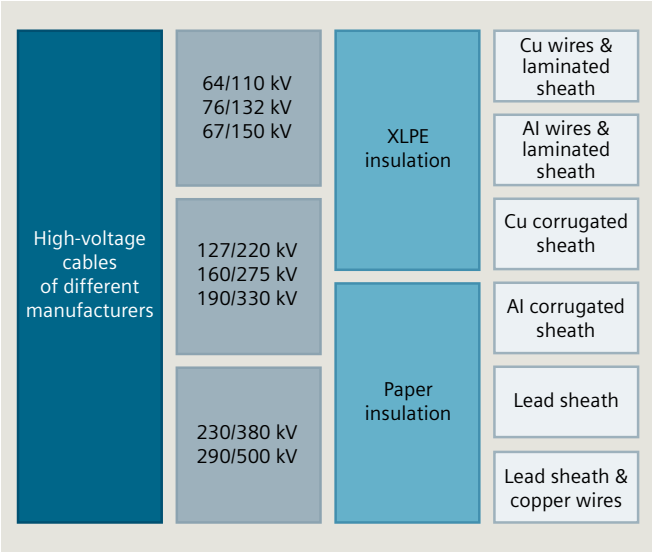

Fig. 2.2-53: Overview of main cable types

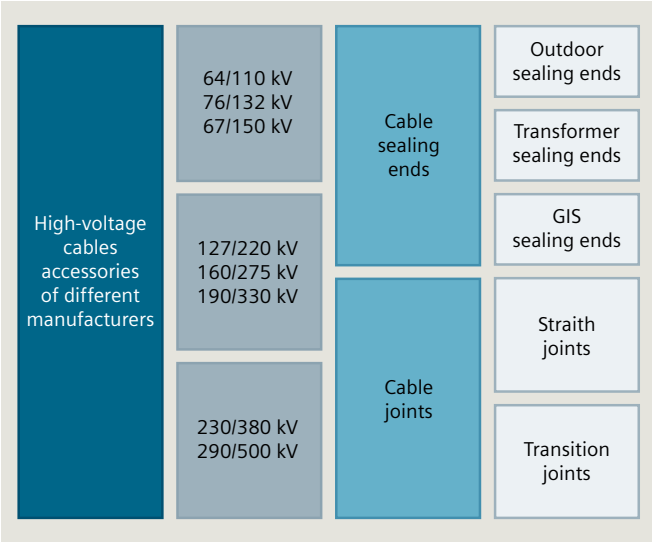

Fig. 2.2-54: Overview of cable accessories

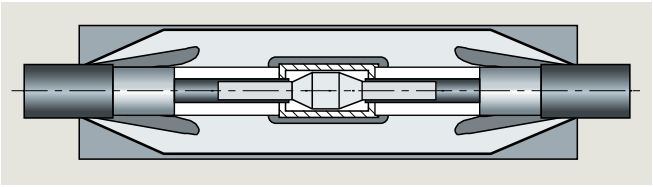

Fig. 2.2-55: Slip-on joint

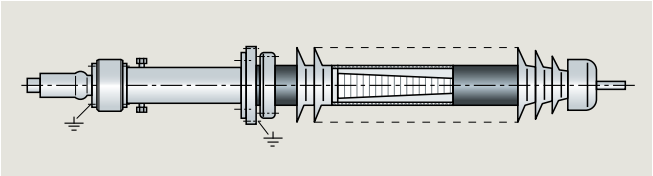

Fig. 2.2-56: Outdoor sealing end

For high-voltage cables, the current-carrying capacity is to be examined by means of special calculation tools for each special case of application. First of all, the laying and installation conditions have to be taken in consideration. Fig. 2.2-57 shows different laying arrangements.

Laying in ground

The depth of laying a high-voltage cable in ground is generally taken as 1.20 m, which is the distance – below the ground surface – to the axis of the cable or the center of a bunch of cables. To lay cables in the ground, calculations show that the load capacity of the cable decreases as depth increases, assuming the same temperature and thermal resistivity of the soil. On the other hand, the deeper regions of the ground are normally moister and remain more consistent than the surface layers.

Crossing of cable runs can cause difficulties especially when these are densely packed (hot spot). At such points, the cables must be laid with a sufficiently wide vertical and horizontal spacing. In addition to this, the heat dissipation must be assisted by using the most favorable bedding material (fig. 2.2-58). A calculation of conductor heat output and temperature rise is absolutely necessary because the maximum conductor temperature of XLPE cable must not exceed 90 °C (fig. 2.2-59).

In case of using different laying arrangements in ground for a cable system, the chain principle "The weakest link determines the strength of the whole chain" applies. This means that the thermally most critical section determines the current-carrying capacity of the whole cable circuit (fig. 2.2-60).

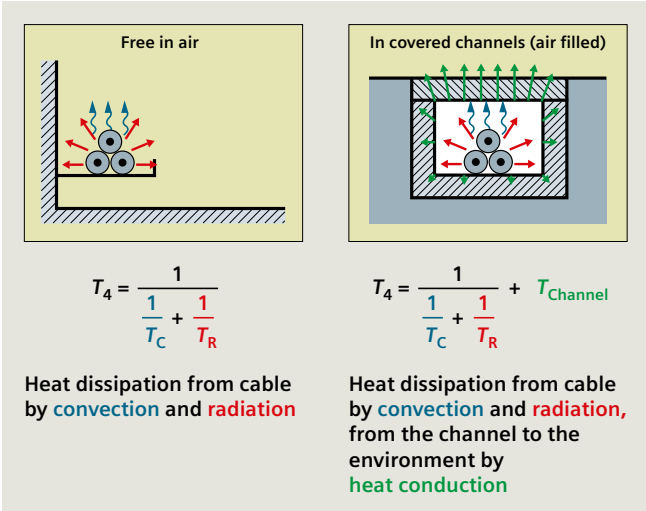

Fig. 2.2-58: Heat dissipation from cables

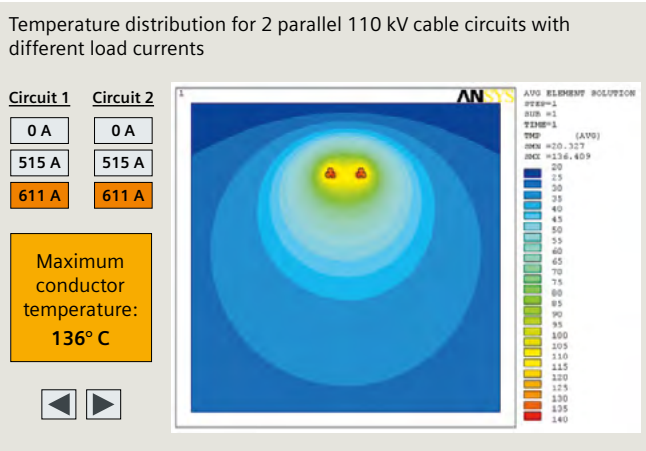

Fig. 2.2-59: Temperature distribution for 2 parallel 110 kV cable circuits

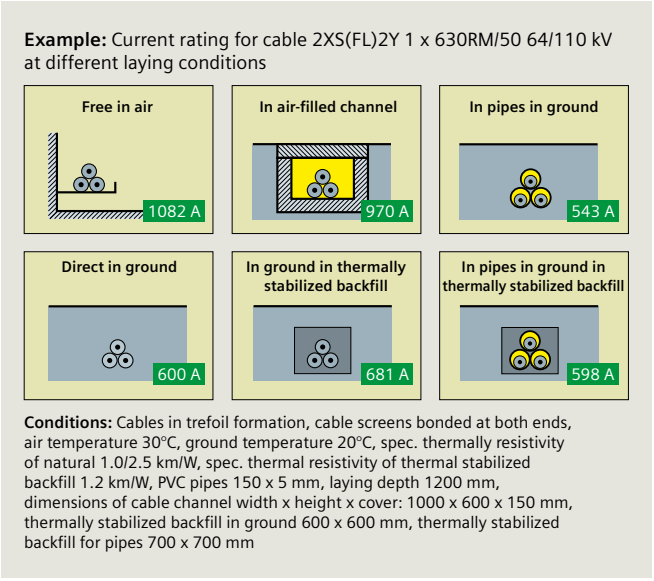

Fig. 2.2-57: Laying arrangements

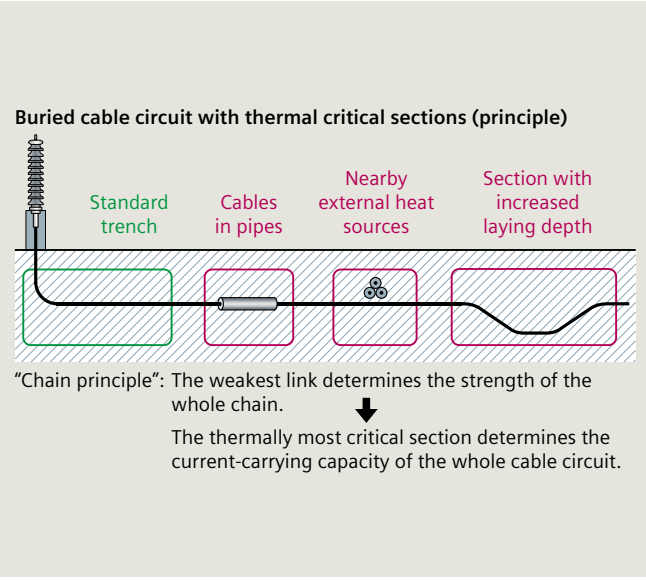

Fig. 2.2-60: Different laying arrangements in ground

Laying free in air
The highest load capacity is given when laying the cables free in air on cable trenches with an unhindered heat dissipation by radiation and convection.

When cables are installed directly on a wall or on the floor, the load capacity has to be reduced by using a factor of 0.95.

However, other heat inputs, e.g., solar radiation, must be considered or prevented by use of covers. The air circulation must be secured, and a calculation of the load capacity is recommended.

The same applies to laying cables in air-filled channels.

When cables are laid in air, the effects of thermal expansion in normal operating mode and in cases of being subjected to short-circuit currents have to be considered.

According to DIN VDE standards, cables have "to be installed in such a way that damage, e.g., by pressure points caused by thermal expansion, are avoided". This can be achieved by installing the cables in an approximate sine-wave form (snaking) and fixing as shown in fig. 2.2-61.

Cable deflection caused by thermal expansion

Project:		
Plant:		
Cable type: N2XS(FL)2Y 1x630 RM/50 64/110 kV		
Input data		
Minimum ambient air temperature	ϑ_{0min}	0 °C
Maximum ambient air temperature	ϑ_{0max}	40 °C
Maximum conductor temperature	ϑ_{Lmax}	90 °C
Minimum deflection (at minimum ambient air temperature)	a_{min}	100 mm
Fixing distance in longitudinal direction	l_S	3.00 m
Additional reduction of fixing distance (i.e. expansion gap)	$-\Delta l_S$	0.00 mm
Conductor material	Kupfer	
Linear expansion coefficient of conductor material	α_l	0.0000162 K^{-1}
Cable expansion and deflection		
Maximum thermal expansion of conductor	$\Delta l\ (\vartheta_{Lmax})$	4.39 mm
Deflection at maximum conductor temperature	$a_{max}\ (\vartheta_{Lmax})$	124 mm
Deflection at max. cond. temperature and reduced fixing distance	$a_{max}\ (\vartheta_{Lmax;}\ -\Delta l_S)$	124 mm

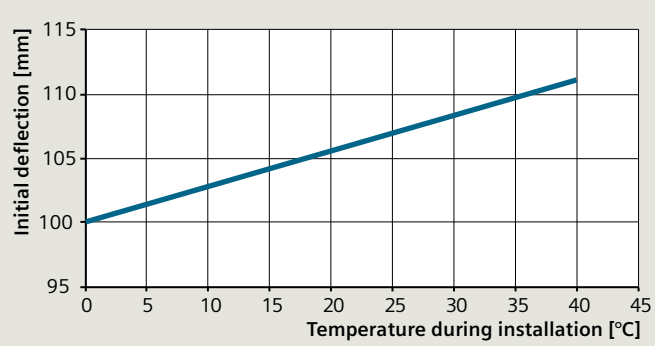

Fig. 2.2-61: Snaking of cables

1
2
3
4
5
6
7
8
9
10
11
12
?

Variants of bonding metal sheaths / screens of single cor HV-cables

Bonding at both sides

+ no induced sheath voltage
+ simple cost saving design
– circulating sheath currents
– additional sheath losses
– reduced current-carrying capacity

Bonding at single sides

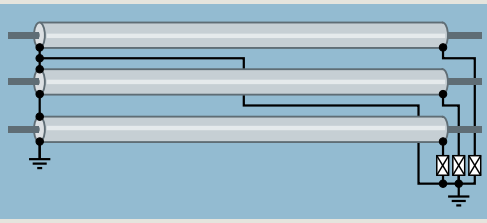

+ no circulating currents
+ increased current-carrying capacity
– induced voltages at sealing ends
– sheath voltage limiters and parallel earth continuity conductor required

Cross bonding

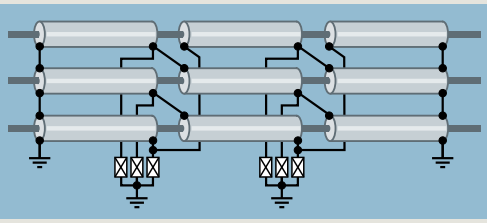

+ no circulating currents
+ increased current-carrying capacity
– induced voltages at joints
– sheath voltage limiters and sheath interruption joints required

Fig. 2.2-62: Different types of earthing

Concerning short-circuit currents, DIN VDE stipulates that "Single core cables must be safely fixed to withstand the effects of peak short-circuit currents", which means they must withstand the stresses caused under short circuit, and remain in position such that neither the cable or the fixing element get damaged.

Earthing
Due to electromagnetic induction, a voltage is induced in the outer conductor and metallic screen, which depends on the operating or short-circuit current level. In order to handle all induced voltages and to guarantee a good earth connection during a short circuit, the outer conductor and the metallic sheath must be sufficiently connected to the external earthing system. Depending on the calculations of the induced voltage, several different types of earthing can be applied (fig. 2.2-62).

The above-mentioned engineering works and calculations which are necessary for safe operation of cable systems can completely carried out by Siemens engineering specialists.

Both-end bonding
For both-end bonding, both ends of the cable screen are connected to the ground. The advantage of the method is that no standing voltages occur at the cable ends.

The disadvantage is that circulating currents may flow inside the screen as the loop between the two earthing points is closed through the ground. As these circulating currents can be as high as the conductor current itself, they can reduce the cable ampacity significantly.

The losses incurred by both-end bonding means that this is the most disadvantageous earthing system method as far as economic issues are concerned. It is therefore mainly applied in selected cases and for short distances.

Single-end bonding
For single-end bonding, only one end of the cable screen is connected to earth while the other end is left floating. The voltage is induced linearly along the whole cable length, and at the "open end" a standing voltage occurs. The open end should be protected with a sheath voltage limiter. This diminishes the chance of overvoltages occurring inside the cable screen, protects the cable system, and ensures that relevant safety requirements are upheld.

The advantage of single-end bonding is that losses caused by circulating currents cannot occur, and the current-carrying capacity is higher.

The disadvantage is the voltage which occurs at one end of the termination.

Cross bonding
Cross bonding is necessary for long cable segments with joints. The cross-bonding system consists of three sections, each followed by a cyclic sheath crossing. At the terminations, earthing must be solidly bonded to the ground. In an ideal cross-bonding system, the three sections are of equal length.

1
2
3
4
5
6
7
8
9
10
11
12
?

Fig. 2.2-63: High-voltage cable references worldwide

The advantage of cross bonding is the absence of residual voltages at the end of the three sections. With no driving voltages, the sheath currents and therefore the losses in the system are zero. In reality, some minor differences between each section and a low current-flow in the sheath do actually cause some losses. However, with a good cross-bonding system, the sheath losses can be kept very low. Another advantage of regular cross bonding is that at the earthed termination ends the voltage is zero.

The disadvantages of cross bonding are the increased amount of additional equipment needed, and the fact that, in reality, three sections of equal length cannot always be implemented.

Project management
In addition to sales and engineering tasks, Siemens is able to provide certified project managers for execution of all kind of high-voltage cable projects. The main competences are:

- Elaboration of turnkey proposals, interface clarifications
- Support of high-voltage cable projects
- Planning of installation (schedule, material, manpower)
- Procurement of high-voltage cable components
- Order processing in turnkey projects
- Commissioning of high-voltage cable systems according to national and international standards
- Fault locations, inspections, modernization of plants
- Service, maintenance for high-voltage cable systems.

Installation
The installation of high-voltage cable systems can be carried out by Siemens installation specialists. All site managers, supervisors and fitters are certified regarding SCC and EHS. It can be taken for granted that the fitters are trained on various accessories directly by main manufacturers. The competences are:

- Surveillance of civil and underground works
- Turnkey installation of high-voltage cable systems, cable laying and assembly of accessories up to rated voltages level 500 kV
- Commissioning of high-voltage cable systems
- Supervision of high-voltage tests at site
- After-sales service
- Fault repair and retrofitting of plants.

References
Siemens looks back on more than 100 years of experience with design and installation of high-voltage cable systems. Its worldwide references of oil cable projects reach back to the 1950, and the references concerning XLPE-cable projects to the 1980.

For further information please contact the Customer Support for Power & Energy:

Tel.: +49 180 524 70 00
E-Mail: support.energy@siemens.com
siemens.com/csc

Overhead lines

Since the very beginning of electric power generation, overhead transmission lines (OHL) have constituted the most important component for transmission and distribution of electric power. The portion of overhead transmission lines within a transmission and distribution system, depends on the voltage level as well as on local conditions and practice. In densely populated areas like Central Europe, underground cables prevail in the distribution sector, and overhead power lines in the high-voltage transmission sector. In other parts of the world, for example, in North America, overhead lines are often also used for distribution purposes within cities. Siemens has planned, designed and erected overhead power lines for all important voltage levels in many parts of the world.

Selection of line voltage

For the distribution and transmission of electric power, standardized voltages according to IEC 60038 are used worldwide. For 3-phase AC applications, three voltage levels prevail:

- Low voltage (up to 1 kV AC)
- Medium voltage (between 1 kV and 36 kV AC)
- High voltage (between 52 kV and 765 kV AC) and higher.

Low-voltage lines serve households and small business consumers. Lines on the medium-voltage level supply small settlements, individual industrial plants and large consumers; the transmission capacity is typically less than 10 MVA per circuit. The high-voltage circuits up to 145 kV serve for subtransmission of the electric power regionally, and feed the medium-voltage grid. This level is often chosen to support the medium-voltage level even if the electric power is below 10 MVA. Moreover, some of these high-voltage lines also transmit the electric power from medium-sized generating stations, such as hydro plants on small and medium rivers, and supply large-scale consumers, such as sizable industrial plants or steel mills. They constitute the connection between the interconnected high-voltage grid and the local distribution systems. The bandwidth of electrical power transported corresponds to the broad range of utilization, but rarely exceeds 100 MVA per circuit, while the surge impedance load is 35 MVA (approximately).

In Central Europe, 245 kV lines were used for interconnection of power supply systems before the 420 kV level was introduced for this purpose. Long-distance transmission, for example, between the hydro power plants in the Alps and consumers, was done by 245 kV lines. Nowadays, the importance of 245 kV lines is decreasing due to the existence of the 420 kV transmission system. The 420 kV level represents the highest operation voltage used for AC transmission in Central Europe. It typically interconnects the power supply systems and transmits the energy over long distances. Some 420 kV lines connect the national grids of the individual European countries enabling interconnected network operation (UCTE = Union for the Co-ordination of Transmission of Electricity) throughout Europe. Large power plants such as nuclear stations feed directly into the

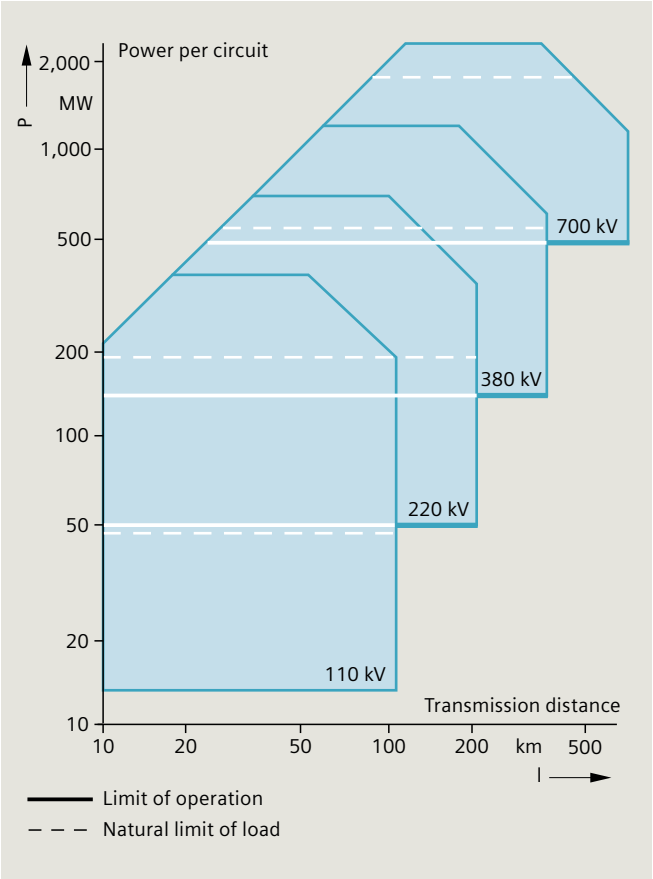

Fig. 2.2-64: Selection of rated voltage for power transmission

420 kV grid. The thermal capacity of the 420 kV circuits may reach 2,000 MVA, with a surge impedance load of approximately 600 MVA and a transmission capacity up to 1,200 MVA.

Overhead power lines with voltages higher than 420 kV AC will be required in the future to economically transmit bulk electric power over long distances, a task typically arising when utilizing hydro, wind and solar energy potentials far away from consumer centers. Fig. 2.2-64 depicts schematically the range of application for the individual AC voltage levels based on the distance of transmission and the power rating. The voltage level has to be selected based on the task of the line within the network or on the results of network planning. Siemens has carried out such studies for power supply companies all over the world.

High-voltage direct current

However, when considering bulk power transmission over long distances, a more economical solution is the high-voltage direct-current (HVDC) technology. Siemens is in the position to offer complete solutions for such interconnections, starting with network studies and followed by the design, assistance in project development and complete turnkey supply and construction of such plants. For DC transmission no standard is currently available. The DC voltages vary from the voltage levels recommended in the above-mentioned standardized voltages used for AC.

HVDC transmission is used for bulk power transmission and for system interconnection. The line voltages applied for projects worldwide vary between ±300 kV, ±400 kV, ±500 kV, ±600 kV and recently (2007), ±800 kV. The selection of the HVDC line voltage is ruled by the following parameters:

- Amount of power to be transferred
- Length of the overhead power line
- Permissible power losses
- Economical conductor size.

The advantages of DC transmission over AC transmission are:

- A DC link allows power transfer between AC networks with different frequencies or networks that cannot be synchronized.
- Inductive and capacitive parameters do not limit the transmission capacity or the maximum length of a DC overhead transmission line.
- The conductor cross-section can be more or less fully utilized because there is no skin effect caused by the line frequency.
- DC overhead power lines are much more economical to built and require less right-of-way.

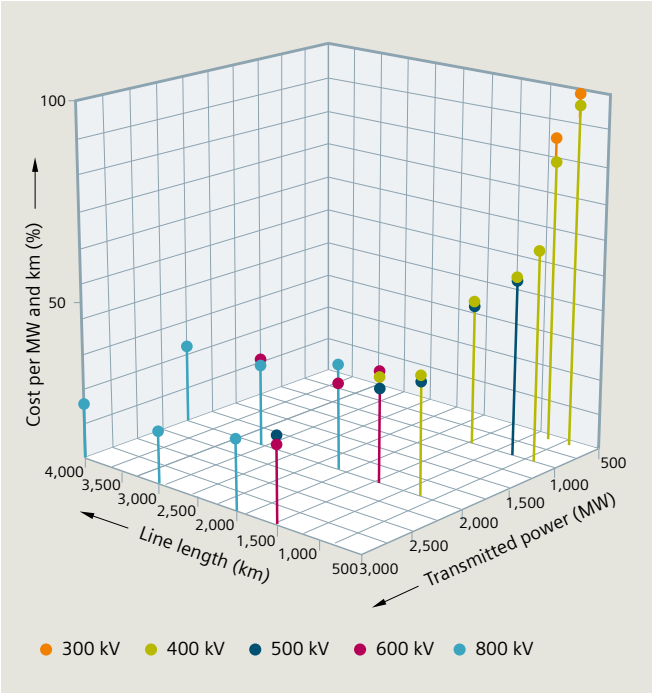

Fig. 2.2-65: Economical application of DC voltages in relation to overhead transmission line length and transmitted power

Economical considerations/evaluation of DC voltages

Fig. 2.2-65 shows the economical application of DC voltages in relation to overhead transmission line length and transmitted power. This graph must be seen as a general guideline. Any project should be separately evaluated on a case-by-case basis. The budgets established for this evaluation are based on 2007 figures.

Conclusions:

- 300 kV voltage level:
  The range of 750 and 1,000 km with a power transfer of 600 MW has been evaluated. The line and converter costs have been added, and transferred into a cost factor per MW power and km of transmission line. The result shows that for long-distance HVDC transmission, the 300 kV voltage level is not the optimal solution (refer to 400 kV below). However, this voltage level is useful in short HVDC interconnectors such as the Thailand-Malaysia Interconnector, which has a line length of 113 km.
- 400 kV voltage level:
  The range 750, 1,000 and 1,500 km with a power transfer of 600, 1,000 and 2,000 MW has been evaluated. The line and converter costs have been added, and transferred into a cost factor per megawatt power and kilometer of transmission line length. The result shows that the 400 kV voltage level is a suitable solution for line lengths of 750 to 1,000 km with transmitted power of 600 to 1,000 MW.
- 500 kV voltage level:
  The range 1,000 and 1,500 km with a power transfer of 1,000, 2,000 and 3,000 MW has been evaluated. The line and converter costs have been added, and transferred into a cost factor per megawatt power and kilometer of transmission line length. The result shows that the 500 kV voltage level is a suitable solution for the line lengths of 1,000 km to 1,500 km with transmitted power of 1,000 to 2,000 MW. However, the 400 kV voltage level can also be competitive in this range of power and line length.
- 600 kV voltage level:
  The range 1,500, 2,000 and 3,000 km with a power transfer of 2,000 and 3,000 MW has been evaluated. The line and converter costs have been added, and transferred into a cost factor per megawatt power and kilometer of transmission line length. The result shows that the 600 kV voltage level is a suitable solution for the line lengths of 1,500 km to 3,000 km with transmitted power of 2,000 MW, and 3,000 MW for lines up to 2,000 km. However, the 500 kV voltage level can still be competitive in parts of this range.
- 800 kV voltage level:
  The range 2,000, 3,000 and 4,000 km with a power transfer of 2,000 and 3,000 MW has been evaluated. The line and converter costs have been added, and transferred into a cost factor per megawatt power and kilometer of transmission line. The result shows that the 800 kV voltage level is a suitable solution for the line lengths of 2,000 km and above with transmitted power of 2,000 and 3,000 MW. However, shorter line lengths of 1,500 to 3,000 km with power rating of 3,000 to 7,000 MW can be economically covered with an 800 kV solution.

Selection of conductors and earth wires

Conductors represent the most important component of an overhead power line because they have to ensure economical and reliable transmission and contribute considerably to the total line costs. For many years, aluminum and its alloys have been the prevailing conducting materials for power lines due to the favorable price, the low weight and the necessity of certain minimum cross-sections. However, aluminum is a very corrosive metal. But a dense oxide layer is formed that stops further corrosive attacks. Therefore, up to a certain level, aluminum conductors are well-suited for areas in which corrosion is a problem, for example, a maritime climate.

For aluminum conductors, there are a number of different designs in use. All-aluminum conductors (AAC) have the highest conductivity for a given cross-section; however, they possess only a low mechanical strength, which limits their application to short spans and low tensile forces. To increase the mechanical strength, wires made of aluminum-magnesium-silicon alloys are adopted. Their strength is approximately twice that of pure aluminum. But single-material conductors like all-aluminum and aluminum alloy conductors have shown susceptibility to eolian vibrations. Compound conductors with a steel core, so-called aluminum conductor, steel-reinforced (ACSR), avoid this disadvantage. The ratio between aluminum and steel ranges from 4.3:1 to 11:1. An aluminum-to-steel ratio of 6.0 or 7.7 provides an economical solution. Conductors with a ratio of 4.3 should be used for lines installed in regions with heavy wind and ice loads. Conductors with a ratio higher than 7.7 provide higher conductivity. But because of lower conductor strength, the sags are bigger, which requires higher towers.

Experience has shown that ACSR conductors, just like aluminum and aluminum alloy conductors, provide the most economical solution and offer a life span greater than 40 years. Conductors are selected according to electrical, thermal, mechanical and economic aspects. The electric resistance as a result of the conducting material and its cross-section is the most important feature affecting the voltage drop and the energy losses along the line and, therefore, the transmission costs. The cross-section has to be selected so that the permissible temperatures will not be exceeded during normal operation as well as under short-circuit condition. With increasing cross-section, the line costs increase, while the costs for losses decrease. Depending on the length of the line and the power to be transmitted, a cross-section can be determined that results in the lowest transmission costs. The heat balance of ohmic losses and solar radiation against convection and radiation determines the conductor temperature. A current density of 0.5 to 1.0 A/mm^2 based on the aluminum cross-section has proven to be an economical solution in most cases.

High-voltage results in correspondingly high-voltage gradients at the conductor's surface, and in corona-related effects such as visible discharges, radio interference, audible noise and energy losses. When selecting the conductors, the AC voltage gradient has to be limited to values between 15 and 17 kV/cm. Since the sound of the audible noise of DC lines is mainly caused at the positive pole and this sound differs from those of AC lines, the subjective feeling differs as well. Therefore, the maximum surface voltage gradient of DC lines is higher than the gradient for AC lines. A maximum value of 25 kV/cm is recommended. The line voltage and the conductor diameter are one of the main factors that influence the surface voltage gradient. In order to keep this gradient below the limit value, the conductor can be divided into subconductors. This results in an equivalent conductor diameter that is bigger than the diameter of a single conductor with the same cross-section. This aspect is important for lines with voltages of 245 kV and above. Therefore, so-called bundle conductors are mainly adopted for extra-high-voltage lines. Table 2.2-3 shows typical conductor configurations for AC lines.

From a mechanical point of view, the conductors have to be designed for everyday conditions and for maximum loads exerted on the conductor by wind and ice. As a rough figure, an everyday stress of approximately 20 % of the

Rated voltage	**[kV]**	**20**		**110**		**220**		**380**		**700**
Highest system voltage	[kV]	24		123		245		420		765
Nominal cross-section	[mm^2]	50	120	150	300	435	bundle 2x240	bundle 4x240	bundle 2x560	bundle 4x560
Conductor diameter	[mm]	9.6	15.5	17.1	24.5	28.8	2x21.9	4x21.9	2x32.2	4x32.2
Ampacity (at 80 °C conductor temperature)	[A]	210	410	470	740	900	1,290	2,580	2,080	4,160
Thermal capacity	[MVA]	7	14	90	140	340	490	1,700	1,370	5,400
Resistance at 20 °C	[Ω/km]	0.59	0.24	0.19	0.10	0.067	0.059	0.030	0.026	0.013
Reactance at 50 Hz	[Ω/km]	0.39	0.34	0.41	0.38	0.4	0.32	0.26	0.27	0.28
Effective capacitance	[nF/km]	9.7	11.2	9.3	10	9.5	11.5	14.4	13.8	13.1
Capacitance to earth	[nF/km]	3.4	3.6	4.0	4.2	4.8	6.3	6.5	6.4	6.1
Charging power	[kVA/km]	1.2	1.4	35	38	145	175	650	625	2,320
Earth-fault current	[A/km]	0.04	0.04	0.25	0.25	0.58	0.76	1.35	1.32	2.38
Surge impedance	[Ω]	360	310	375	350	365	300	240	250	260
Surge impedance load	[MVA]	–	–	32	35	135	160	600	577	2,170

Table 2.2-3: Electric characteristics of AC overhead power lines (data refer to one circuit of a double-circuit line)

1
2
3
4
5
6
7
8
9
10
11
12
?

conductor rated tensile stress can be adopted, resulting in a limited risk of conductor damage. The maximum working tensile stress should be limited to approximately 40 % of the rated tensile stress.

Earth wires, also called shieldwire or earthwire, can protect a line against direct lightning strikes and improve system behavior in the event of short circuits; therefore, lines with single-phase voltages of 110 kV and above are usually equipped with earth wires. Earth wires made of ACSR conductors with a sufficiently high aluminum cross-section satisfy both requirements.

Since the beginning of the 1990s, more and more earth wires for extra-high-voltage overhead power lines have been executed as optical earth wires (OPGW). This type of earth wire combines the functions just described for the typical earth wire with the additional facility for large data transfer capacity via optical fibers that are integrated into the OPGW. Such data transfer is essential for the communication between two converter stations within an HVDC interconnection or for remote controlling of power plants. The OPGW in such a case becomes the major communication link within the interconnection. OPGW are mainly designed in one or more layers of aluminum alloy and/or aluminum-clad steel wires. One-layer designs are used in areas with low keraunic levels (small amount of possible lightning strikes per year) and small short-circuit levels.

Selection of insulators
Overhead line insulators are subject to electrical and mechanical stresses, because they have to isolate the conductors form potential to earth and must provide physical supports. Insulators must be capable of withstanding these stresses under all conditions encountered in a specific line.

The electrical stresses result from:
- The steady-state operating power-frequency voltage (highest operation voltage of the system)
- Temporary overvoltages at power frequency
- Switching and lightning overvoltages.

Insulator types
Various insulator designs are in use, depending on the requirements and the experience with certain insulator types:
- Cap-and-pin insulators (fig. 2.2-66) are made of porcelain or pre-stressed glass. The individual units are connected by fittings of malleable cast iron or forged iron. The insulating bodies are not puncture-proof, which is the reason for a relatively high number of insulator failures.
- In Central Europe, long-rod insulators made from aluminous porcelain (fig. 2.2-67) are most frequently adopted. These insulators are puncture-proof. Failures under operation are extremely rare. Long-rod insulators show superior behavior, especially in polluted areas. Because porcelain is a brittle material, porcelain long-rod insulators should be protected from bending loads by suitable fittings.

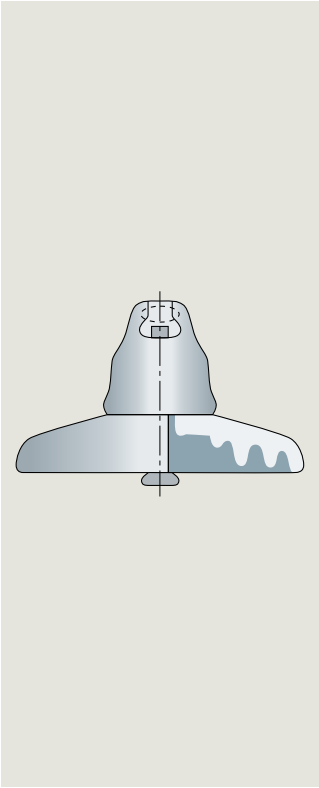

Fig. 2.2-66: Cap-and-pin insulator (above)

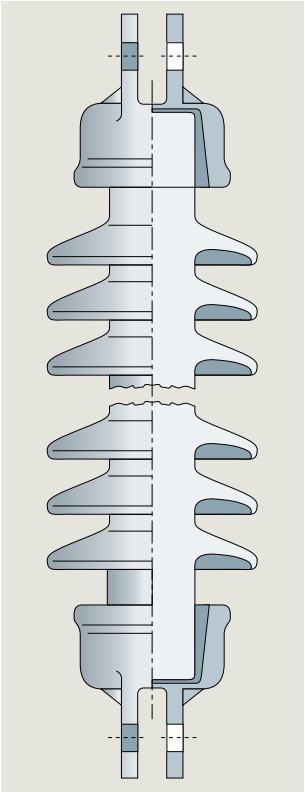

Fig. 2.2-67: Long-rod insulator with clevis caps

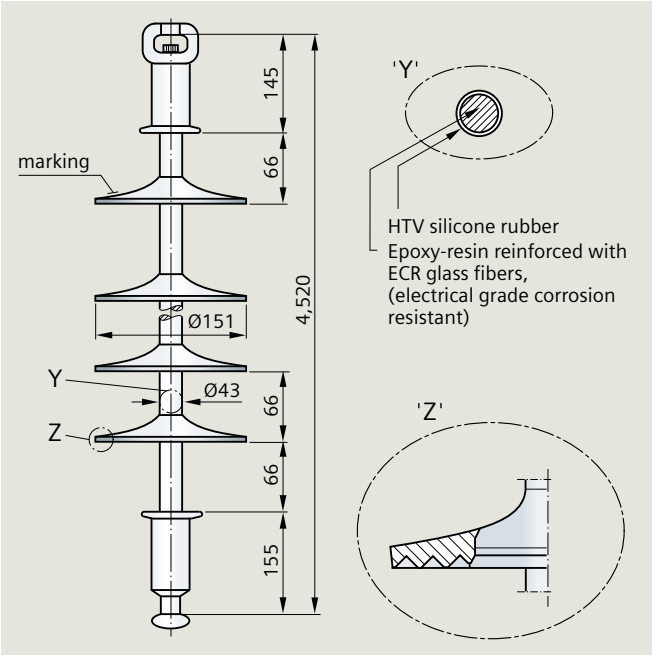

Fig. 2.2-68: Glass fiber reinforced composite insulator with ball and socket fittings (lapp insulator)

- Composite insulators are the third major type of insulator for overhead power line applications (fig. 2.2-68). This insulator type provides superior performance and reliability, particularly because of improvements over the last 20 years, and has been in service for more than 30 years.

The composite insulator is made of a glass fiber reinforced epoxy rod. The glass fibers applied are ECR glass fibers that are resistant to brittle fracture (ECR = electrical grade corrosion resistant glass fibers). In order to avoid brittle fracture, the glass fiber rod must additionally be sealed very carefully and durably against moisture. This is done by application of silicone rubber. Nowadays, high temperature vulcanized (HTV) silicone is used.

The silicone rubber has two functions within this insulator type:
- Sealing the glass fiber rod
- Molding into insulator sheds to establish the required insulation.

Metal fittings are compressed onto the glass fiber rod at both ends of the insulator, either with a ball socket or clevis connection fitting. Since the 1980s, compression fittings have been the prevailing type. The sealing of the area between fitting and silicone housing protecting the rod is most important, and is nowadays done with special silicone elastomer, which offers after vulcanization the characteristic of a sticky solid, similar to a fluid of high viscosity.

Advantages of the composite long-rod insulator are:
- Light weight, less volume and less damages
- Shorter string length compared to cap-and-pin – and porcelain long-rod – insulator strings
- Up to 765 kV AC and 600 kV DC, only one unit of insulator (practical length is only limited by the ability of the production line) is required
- High mechanical strength
- Vandalism resistance
- High performance in polluted areas, based on the hydrophobicity (water repellency) of the silicone rubber.

Advantages of hydrophobicity are:
- Silicone rubber offers outstanding hydrophobicity over the long term; most other polymeric housing material will loose this property over time
- Silicone rubber is able to recover its hydrophobicity after a temporary loss of it
- The silicone rubber insulator is able to make pollution layers on its surface water-repellent, too (hydrophobicity transfer)
- Low surface conductivity, even with a polluted surface and very low leakage currents, even under wetted conditions.

Insulator string sets
Suspension insulator sets carry the conductor weight, including additional loads such as ice and wind, and are arranged more or less vertically. There are I-shaped (fig. 2.2-69a) and V-shaped sets in use. Tension insulator sets (fig. 2.2-69b, fig. 2.2-69c) terminate the conductors and are arranged in the direction of the conductors. They are loaded by the conductor tensile force and have to be rated accordingly. Multiple single, double, triple or more sets handle the mechanical loadings and the design requirements.

Design of creepage distance and air gaps
The general electrical layout of insulation is ruled by the voltages to be withstood and the pollution to which the insulation is subjected. The standards IEC 60071-1 and IEC 60071-2 as well as the technical report IEC 60815, which provides four pollution classes (the new version will have five classes), give guidance for the design of the insulation.

Because IEC 60815 is applicable to AC lines, it should be noted that the creepage distances recommended are based on the phase-to-phase AC voltage (UL-L). When transferring these creepage distances recommended by IEC 60815 to a DC line, it should be noted that the DC voltage is a pole-to-earth value (UL-E). Therefore, these creepage distances have to be multiplied by the factor $\sqrt{3}$. Furthermore, it should be noted that the AC voltage value refers to a mean value, while the DC voltage is comparable to a peak value, which requires a further multiplication with factor $\sqrt{2}$.

Insulators under DC voltage operation are subjected to a more unfavorable conditions than they are under AC, due to a higher collection of surface contamination caused by the constant unidirectional electric field. Therefore, a DC pollution factor has to be applied. Table 2.4-3 shows specific creepage distances for different insulator materials under AC and DC application, and is based on industry experience published by power supply companies in South Africa and China. The results shown were confirmed by an experienced insulator manufacturer in Germany. The correction factors shown are valid for porcelain insulators only. When taking composite insulators into consideration, an additional reduction factor of 0.75 can be applied. The values for a DC system must be seen as a guideline only, that must be verified on a case-by-case basis for new HVDC projects.

To handle switching and lightning overvoltages, the insulator sets have to be designed with respect to insulation coordination according to IEC 60071-1 and IEC 60071-2. These design aspects determine the gap between the earthed fittings and the live part. However, for HVDC application, switching impulse levels are of minor important because circuit-breaker operations from AC lines do not occur on DC Back-to-back lines. Such lines are controlled via their valve control systems. In order to coordinate the insulation in a proper way, it is recommended to apply and use the same SIL and BIL as is used for the equivalent AC insulation (determined by the arcing distance).

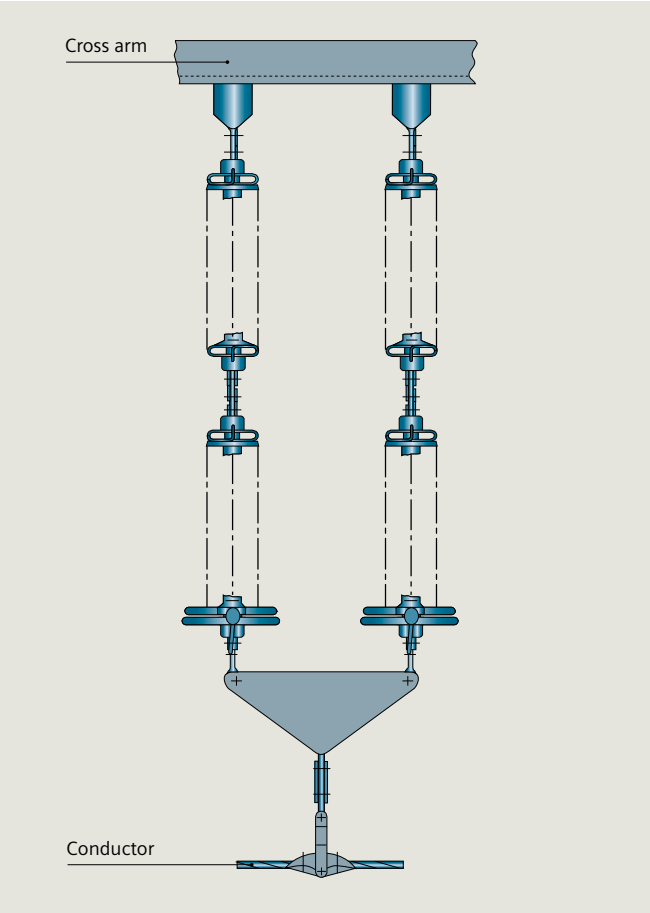

Fig. 2.2-69a: I-shaped suspension insulator set for 245 kV

IEC 60815 level		Porcelain and glass insulators		Composite insulators	
		AC system	DC system	AC system	DC system
I Light	[mm/ kV]	16	39	12	29
II Medium	[mm/ kV]	20	47	15	35
III Heavy	[mm/ kV]	25	59	19	44
IV Very Heavy	[mm/ kV]	31	72	24	54

Table 2.2-4: Guideline for specific creepage distances for different insulator materials

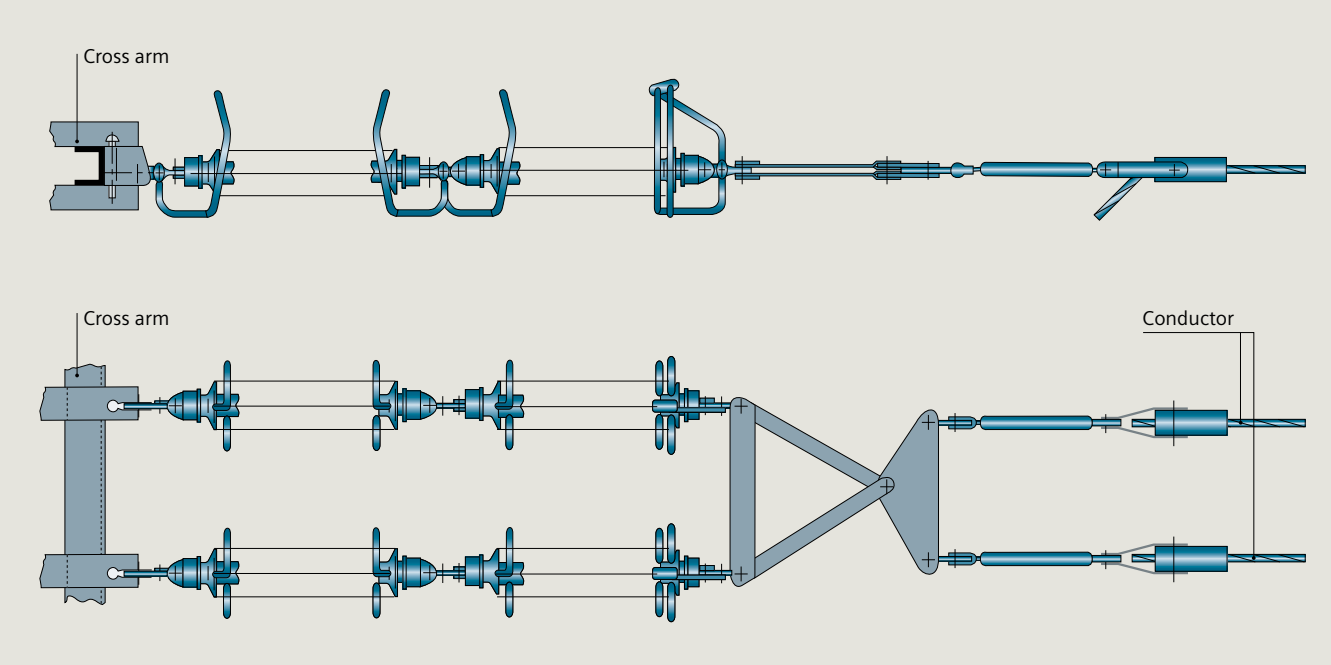

Fig. 2.2-69b: Double tension insulator set for 245 kV (elevation, top)
Fig. 2.2-69c: Double tension insulator set for 245 kV (plan, bottom)

Selection and design of supports

Together with the line voltage, the number of circuits (AC) or poles (DC) and type of conductors, the configuration of the circuits poles determines the design of overhead power lines. Additionally, lightning protection by earth wires, the terrain and the available space at the tower sites have to be considered. In densely populated areas like Central Europe, the width of right-of-way and the space for the tower sites are limited. In the case of extra-high-voltages, the conductor configuration affects the electrical characteristics, the electrical and magnetic field and the transmission capacity of the line. Very often there are contradicting requirements, such as a tower height as low as possible and a narrow right-of-way, which can only be met by compromises. The minimum clearance of the conductors depends on the voltage and the conductor sag. In ice-prone areas, conductors should not be arranged vertically, in order to avoid conductor clashing after ice shedding.

For low-voltage and medium-voltage lines, horizontal conductor configurations prevail; these configurations feature line post insulators as well as suspension insulators. Poles made of wood, concrete or steel are preferred. Fig. 2.2-70 shows some typical line configurations. Earth wires are omitted at this voltage level.

For high-voltage and extra-high-voltage power lines, a large variety of configurations are available that depend on the number of circuits (AC) or poles (DC) and on local conditions. Due to the very limited right-of-way, more or less all high-voltage AC lines in Central Europe comprise at least two circuits. Fig. 2.2-71 shows a series of typical tower configurations. Arrangement "e" is called the "Danube" configuration and is often adopted. It represents a fair compromise with respect to width of right-of-way, tower height and line costs.

For AC lines comprising more than two circuits, there are many possibilities for configuring the supports. In the case of circuits with differing voltages, those circuits with the lower voltage should be arranged in the lowermost position (fig. 2.2-71g).

DC lines are mechanically designed according to the normal practice for typical AC lines. The differences from AC Line layout are the:

- Conductor configuration
- Electric field requirements
- Insulation design.

For DC lines, two basic outlines (monopole and bipole), with variations should be considered. Fig. 2.2-71i–l show examples for HVDC line configurations that are valid for all voltage levels.

The arrangements of insulators depend on the application of a support within the line. Suspension towers support the conductors in straight-line sections and at small angles. This tower type offers the lowest costs; special attention should therefore be paid to using this tower type as often as possible. Angle towers have to carry the conductor tensile forces at angle points of the line. The tension insulator sets permanently transfer high forces from the conductors to the supports. Finally, dead-end towers are used at the terminations of a transmission line. They carry the total conductor tensile forces on the line side (even under unbalanced load condition, e. g., when conductors of one tower side are broken) and a reduced tension into the substations (slack span).

Various loading conditions specified in the respective national and international standards have to be met when designing towers. The climatic conditions, the earthquake requirements and other local environmental factors are the next determining factors for the tower design.

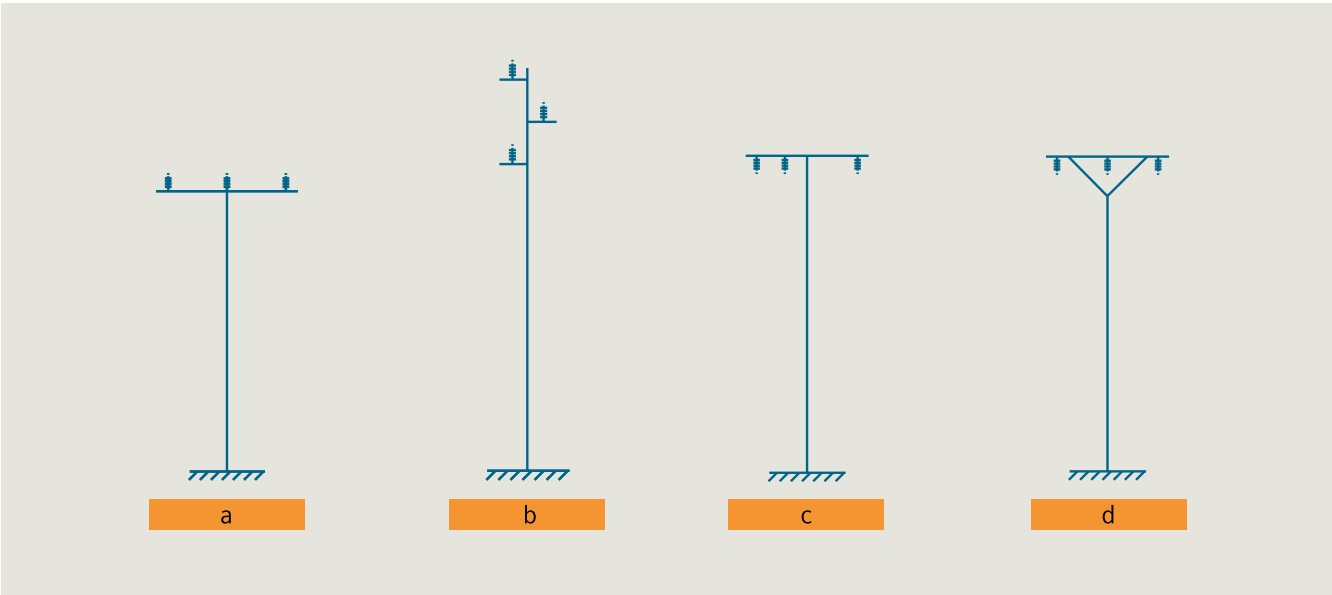

Fig. 2.2-70: Configurations of medium-voltage supports

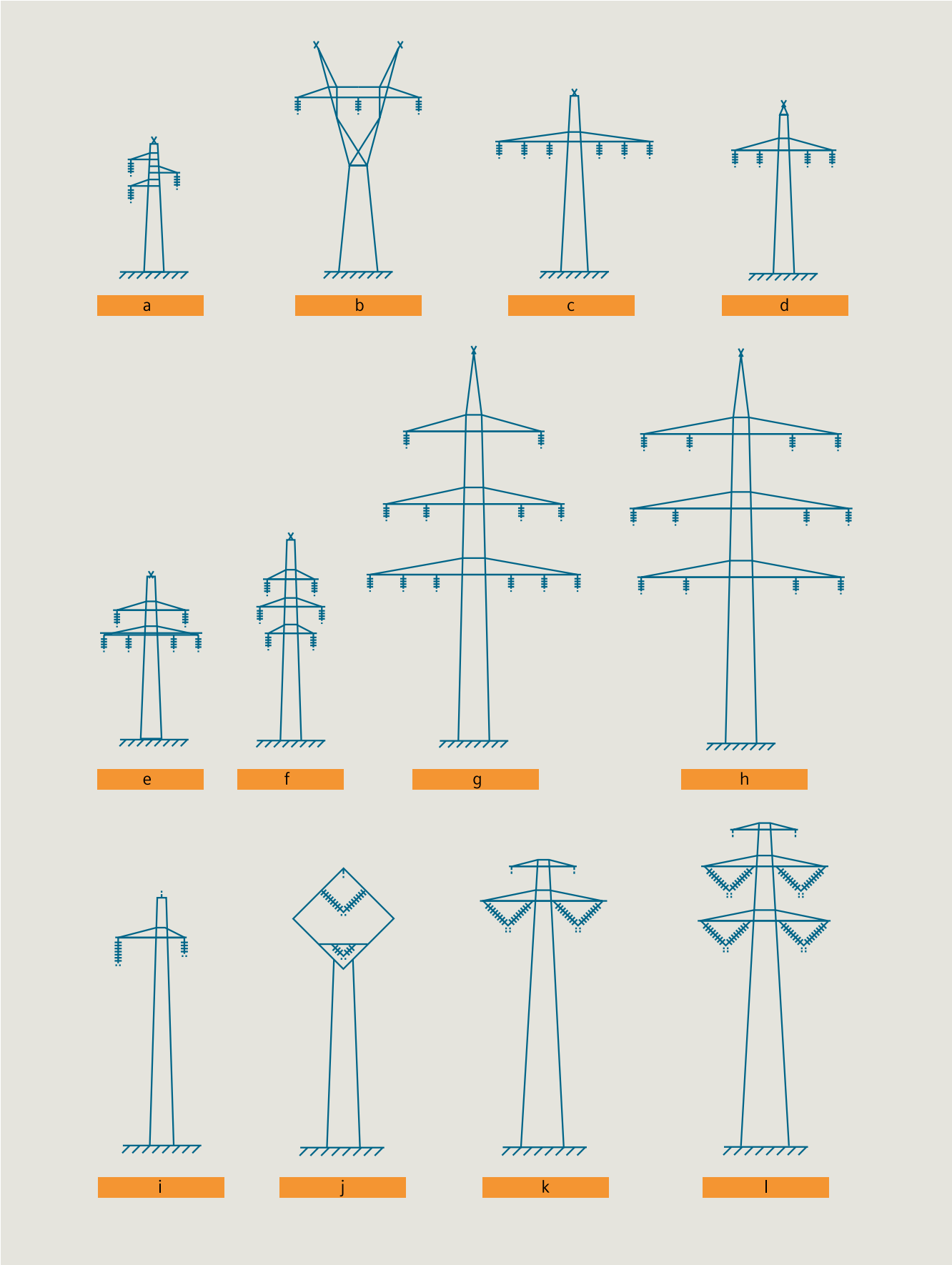

Fig. 2.2-71: (a–h): tower configurations for high-voltage lines (AC); (i–l): tower configurations for high-voltage lines (DC)

1
2
3
4
5
6
7
8
9
10
11
12
?

When designing the support, a number of conditions have to be considered. High wind and ice loads cause the maximum forces to act on suspension towers. In ice-prone areas, unbalanced conductor tensile forces can result in torsional loading. Additionally, special loading conditions are adopted for the purpose of failure containment, that is, to limit the extent of damage. Finally, provisions have to be made for construction and maintenance.

Depending on voltage level and the acting forces of the overhead line, differing designs and materials are adopted. Poles made of wood, concrete or steel are very often used for low-voltage and medium-voltage lines. Towers with lattice steel design, however, prevail at voltage levels of 110 kV and above (fig. 2.2-72). Guyed lattice steel structures are used in some parts of the world for high-voltage AC and DC lines. Such design requires a relatively flat topography and a secure environment where there is no threat from vandalism and theft. Guyed lattice steel structures offer a substantial amount of cost savings with respect to tower weight and foundation quantities. However, a wider right-of-way has to be considered.

Fig. 2.2-72: Typical Central European AC line design with different voltage levels

Foundations for the supports
Overhead power line supports are mounted on concrete foundations. The foundations have to be designed according to the national or international standard applicable for the particular project.

The selection of foundation types and the design is determined by the:
- Loads resulting from the tower design
- Soil conditions on the site
- Accessibility to the line route
- Availability of machinery
- Constraints of the particular country and the site.

Concrete blocks or concrete piers are in use for poles that exert bending moments on the foundation. For towers with four legs, a foundation is provided for each individual leg (fig. 2.2-73). Pad and chimney and concrete block foundations require good bearing soil conditions without groundwater.

Driven or augured piles and piers are adopted for low-bearing soil, for sites with bearing soil at a greater depth and for high groundwater level. In case of groundwater, the soil conditions must permit pile driving. Concrete slabs can be used for good bearing soil, when subsoil and groundwater level prohibit pad and chimney foundations as well as piles.

Route selection and tower spotting
Route selection and planning represent increasingly difficult tasks, because the right-of-way for transmission lines is limited and many aspects and interests have to be considered.

Route selection and approval depend on the statutory conditions and procedures prevailing in the country of the project. Route selection nowadays involves preliminary desktop studies with a variety of route alternatives, environmental impact studies, community communication hearings and acceptance approval from the local authorities.

After the route design stage and approval procedure, the final line route is confirmed. Following this confirmation and approval, the longitudinal profile has to be surveyed, and all crossings over roads, rivers, railways, buildings and other overhead power lines have to be identified. The results are evaluated with a specialized computer program developed by Siemens that calculates and plots the line profile. The towers are spotted by means of the same program, which takes into account the conductor sags under different conditions, the ground clearances, objects crossed by the line, technical data of the available tower family, specific cost for towers and foundations and cost for compensation of landowners.

The result is an economical design of a line that accounts for all the technical, financial and environmental conditions. Line planning forms the basis for material acquisition and line erection. Fig. 2.2-74 shows a line profile established by computer.

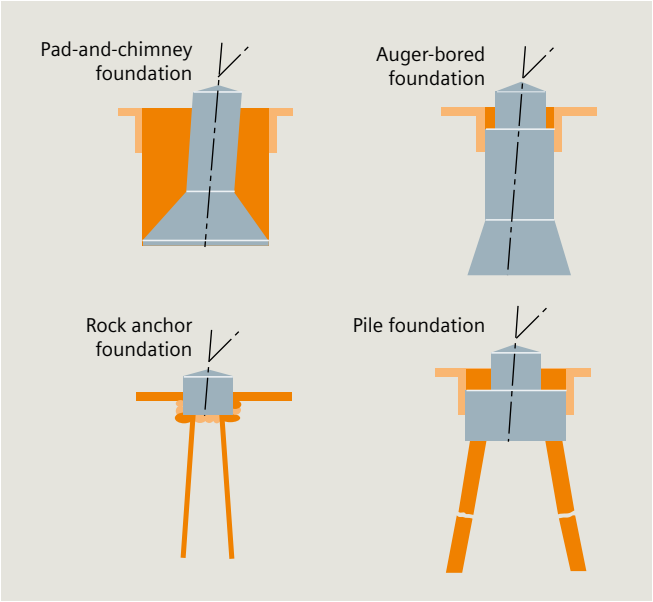

Fig. 2.2-73: Foundations for four-legged towers

Siemens' activities and experience
Siemens has been active in the overhead power line field for more than 100 years. The activities comprise design and construction of rural electrification schemes, low-voltage and medium-voltage distribution lines, high-voltage lines and extra-high-voltage installations.

To give an indication of what has been carried out by Siemens, approximately 20,000 km of high-voltage lines up to 245 kV and 10,000 km of extra-high-voltage lines above 245 kV have been set up so far. Overhead power lines have been erected by Siemens in Germany and Central Europe as well as in the Middle East, Africa, the Far East and South America.

Outstanding AC projects have been:
- The 420 kV transmission lines across the Elbe River in Germany comprising four circuits and requiring 235 m tall towers
- The 420 kV line across the Bosphorus (Crossing II) in Turkey (1983) with a crossing span of approximately 1,800 m (fig. 2.4-37).
- The 500 kV Suez Crossing (1998); height of suspension tower 220 m
- The 420/800 kV Bosporus Crossing III in Turkey (1999).

Furthermore, Siemens has constructed two HVDC interconnectors as turnkey projects that include HVDC overhead transmission lines. The two projects are the 300 kV HVDC interconnector from Thailand to Malaysia (bipole transmission line, fig. 2.2-76) and the 400 kV HVDC Basslink project in Australia (monopole transmission line, fig. 2.2-77a–c).

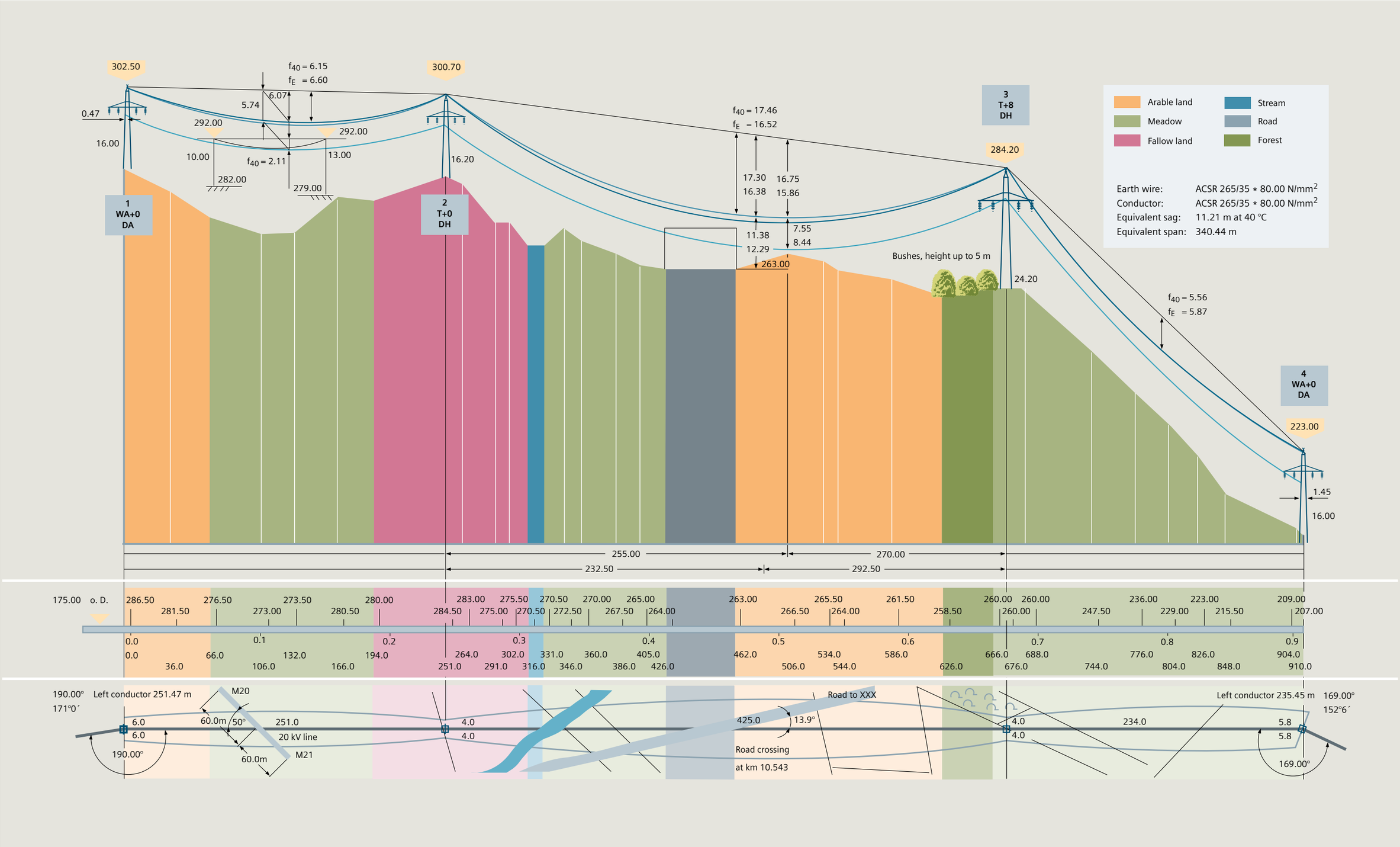

Fig. 2.2-74: Line profile established by computer

1
2
3
4
5
6
7
8
9
10
11
12
?

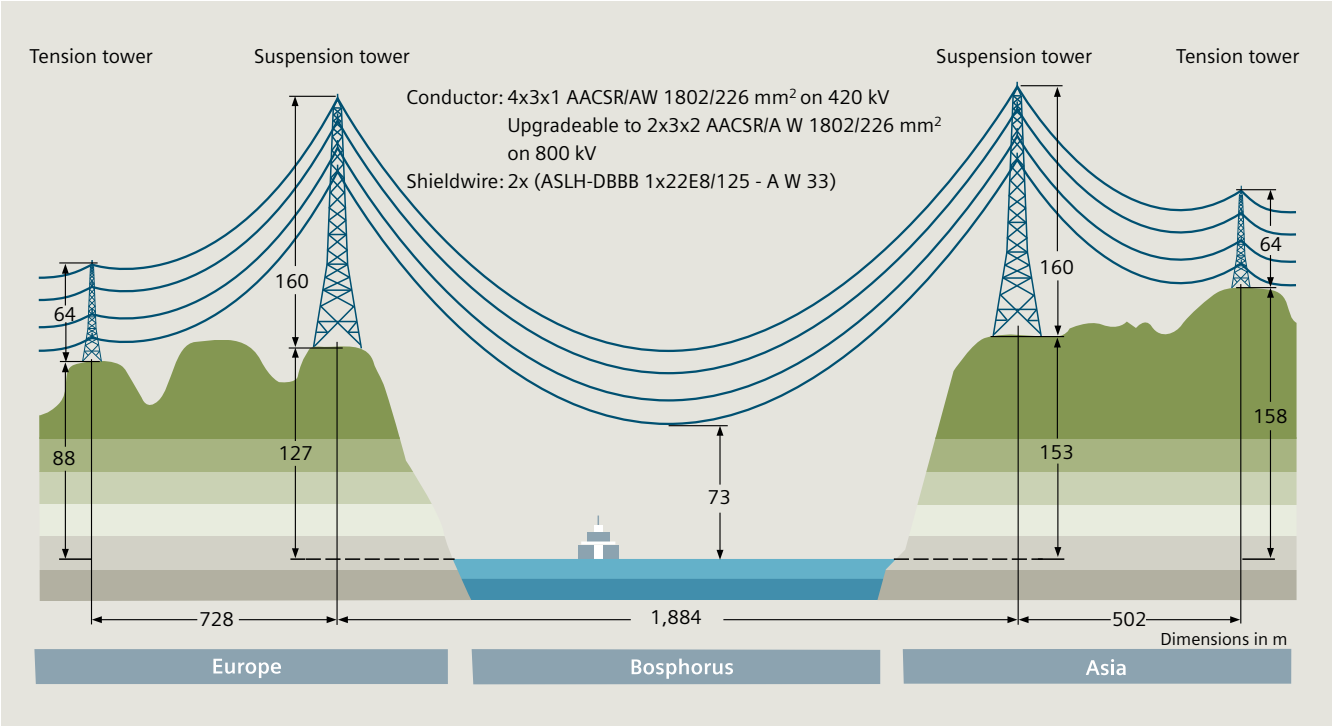

Fig. 2.2-75: 420/800 kV line across the Bosphorus, longitudinal profile

Fig. 2.2-76: 300 kV HVDC interconnector from Thailand to Malaysia (bipole transmission line)

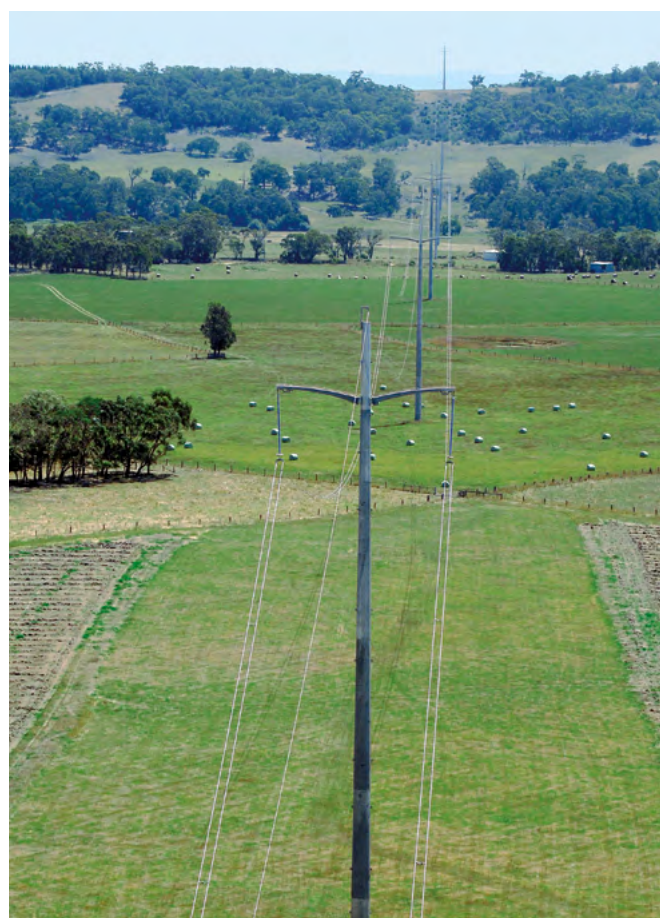

Fig. 2.2-77a: 400 kV HVDC Basslink project in Australia (monopole transmission line)

Fig. 2.2-77b, c: 400 kV HVDC Basslink project in Australia (monopole transmission line)

For further information please contact the Customer Support for Power & Energy:

Tel.: +49 180 524 70 00
E-Mail: support.energy@siemens.com
siemens.com/csc

2.3 Medium-voltage systems

2.3.1 SIESTORAGE – energy storage system

From production to consumption

Demands of a modern eco-friendly grid
The use of renewables on a large scale leads to new challenges for managing grid stability due to the variability of power grids and where they are connected, ever more often to distribution grids designed for unidirectional power flows. The infeed from distributed sources can cause a reverse load flow that may damage traditional grids (fig. 2.3-1 and fig. 2.3-2).

Modern power grids require balancing elements such as SIESTORAGE that store electricity during oversuply and feed it back when needed. This reduces disturbances caused by both variable generation and load, and improves the efficiency of traditional generators.

Making grids fit for the future
Grid operators are looking for new answers to the challenge of delivering a stable electrical power supply. SIESTORAGE is a modern, eco-friendly way to deal with the power balancing tasks that come with connecting grids. It helps to increase stability and asset performance, and play a fundamental role in optimizing the grid by storing and delivering energy all along the power supply chain from generation to consumption. By ensuring constant energy on the transmission grid and on the distribution grid, SIESTORAGE not only contributes to grid relief, but also makes grid extensions unnecessary. Thus, SIESTORAGE is the cost-efficient answer to the challenge of rising demands on both the generation and consumption sides of power grids (fig. 2.3-3).

Fig. 2.3-1: SIESTORAGE offers solutions for distribution grids with a high share of distributed renewable energy sources

Fig. 2.3-2: SIESTORAGE offers solutions for distribution grids with a high share of distributed renewable energy sources

fotolia.com © StockPhotosArt

Key facts
- 472 kW / 360 kWh SIESTORAGE energy storage system
- 8 battery racks, 4 three-phase converters, 1 transformer, and 1 GIS
- Main applications: backup power, voltage regulation, peak shaving
- Fully containerized
- Turnkey solution

Fig. 2.3-3: Reference: EDP, Evora, Portugal

1
2
3
4
5
6
7
8
9
10
11
12
?

Sustainable power microgrids and off-grids
Microgrids are aggregations of electrical and thermal production, storage and load facilities – either geographically delimited as in off-grids, or within an industrial or infrastructure complex. They exist in both forms – with or without a connection to a larger supply grid. Their main tasks are self-sustainability and the ability of independent operation.

On the generation side, renewable sources are usually combined with fossil-fuel powered generatos. Used for balancing out the unsteady input from the renewables, these generators often have to be operated unefficiently, generating more costs and emissions.

SIESTORAGE enables the diesel generators or gas turbines to be run at optimum efficiency, supplying energy and loading the batteries. In low-demand situations, SIESTORAGE takes over the supply duties until the next generator run. Furthermore, SIESTORAGE provides stabilization functions such as frequency and voltage regulation, and emergency functions such as black start in the event of a total grid collapse, thus maximizing grid independence (fig. 2.3-4).

Reliable and safe industrial power supply
Electricity costs are an important factor for large consumers. Rates depend on the time of consumption and if predefined demand schedules are met – with optional penalties and remote shutdown by the utility in the case of overconsumption or in peak hours. With SIESTORAGE, times of higher than usual demand can be bridged, avoiding penalties, and reducing the demand during peak-priced times helps to minimize energy costs.

In order to ensure reliable power supply, industrial consumers often utilize individual power stabilization facilities. The combination of active and reactive power makes SIESTORAGE the perfect solution for the stabilization needs of large consumers. For the industry, SIESTORAGE raises availability and efficiency, while keeping costs under control. With its black start capability, SIESTORAGE helps to furher improve the reliability of electrical supply, thus minimizing costly production losses in the case of a power cut (fig. 2.3-5).

Shuuterstocks

Key facts
500 kW / 600 kWh **SIESTORAGE** battery energy storage system, accompanied by a **microgrid controller** to:
- Control the storage system, increase renewable energy yield, optimize the diesel engine operation for maximum fuel efficiency and longevity of the engines, and minimize O&M.
- Provide grid stabilization by helping to balance supply and demand, and reduce the volatility caused by variations in load and unpredictable fluctuations in power generated by decentralized renewable energy resources.

Fig. 2.3-4: Reference: ENEL, Island of Ventotene, Italy

Gettyimages

Key facts
- 1080 kWh SIESTORAGE energy storage system
- Power output: 2.8 MV / 1.2 MW
- Supply security for the AMEH steel works if the local grid is interrupted
- Independency of the power plant by switching over to a stand-alone grid
- Black start of a gas turbine for grid stabilization
- Intelligent load peak management

Fig. 2.3-5: Reference: VEO, Vulkan Energiewirtschaft Oderbrücke GmbH, Germany

1
2
3
4
5
6
7
8
9
10
11
12
?

Unmatched versatility

SIESTORAGE provides multiple use cases of energy storage for a large field of applications.

Applications		Use cases
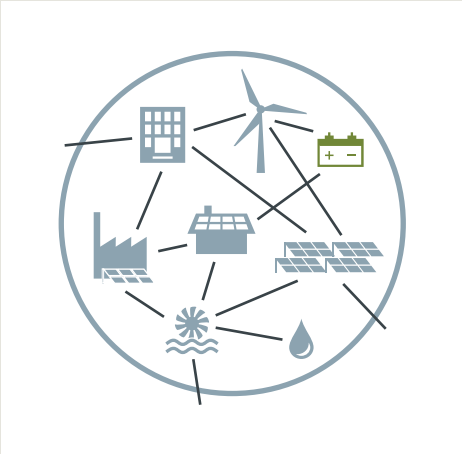	**Electricity supply for stand-alone/off-grids/microgrids** Gettyimages	Black start Ramping control Time shifting Capacity firming Diesel offset Frequency regulation (primary control reserve) Peak load management
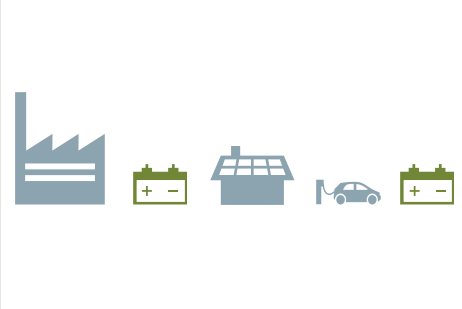	**Electricity supply for industry** fotolia.com © mmmx	Black start Critical power Diesel offset Peak load management
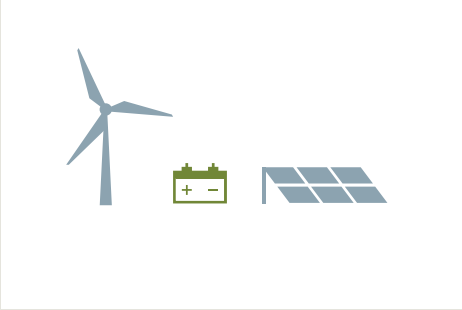	**Integration of renewable energy** 	Ramping control Time shifting Capacity firming
	T&D upgrade deferral 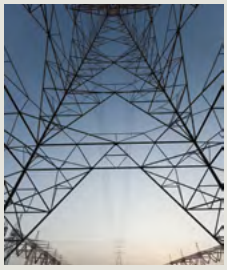	Peak load management Ramping control Frequency regulation

Table 2.3-1: Typical applications and use cases

1
2
3
4
5
6
7
8
9
10
11
12
?

Use cases	Description
Black start	Black start is the process of restoring the operation of an electric power plant or part of a power grid without relying on an external grid. SIESTORAGE is responsible for grid forming through voltage and frequency regulation of the connected grid. It can also run in combination with other generators, such as diesel generators, with the power division being controlled by static droop curves. Generally, power plants or off-grids use small diesel generators to start larger generators, or to provide power references such as voltage and frequency to allow renewable energy generators to reconnect. Due to the response speed of the power conversion technology, the advanced control, and the lithium-ion battery technology, SIESTORAGE is a time-saving and more reliable alternative to black start diesel generators. Furthermore, SIESTORAGE is able to provide the necessary short-circuit power to ensure a given protection sequence.
Ramping control	In order to protect grid stability, many grid codes specify a ramp rate or rate of change (in %) over time for generators connected to the grid. Compliance with ramp rates ensures the grid operator is able to manage variations in load and generation, and to maintain a proper frequency. Due to its reliance on changing weather patterns, renewable energy output is susceptible to rapid rates of change. SIESTORAGE can be used to counteract the variability of renewable energy output by using set points to respond. This can be achieved either by injecting energy into the grid, or by harnessing energy from the plant to ensure compliance with set ramp rates. Therefore, SIESTORAGE feeds the grid with the required controlling energy to maintain frequency and voltage stability.
Time shifting / arbitrage	Often, there is a mismatch between the availability of renewable energy and demand. Wind output is normally at its highest during the night, and solar output at midday, for example. Peak demand is however generally in the mornings or evenings. High demand for electrical power is often reflected by higher purchase prices. In order to maximize the use of renewable energy generators and speed up return on investment, renewable energy developers and operators can time-shift the plant output to offer it to the market when it is most profitable. By storing overcapacity when supply exceeds demand, and by injecting energy when demand exceeds supply, SIESTORAGE provides a means for boosting plant efficiency.
Capacity firming	To ensure grid stability, system operators use forecasts to schedule or match generation and load. This activity is normally carried out in 15-minute time blocks throughout the day, one day in advance. Time intervals can however also be more closely aligned with real time. In order to encourage scheduling accuracy, regulators impose rules for accuracy of forecast vs. schedule vs. dispatch. Power producers are encouraged to reduce deviations between what they are contracted or scheduled to deliver and what they actually deliver. Even with modern forecasting tools, the natural variability of renewable energy means that accurate scheduling is far more difficult compared with conventional generation. SIESTORAGE can be used to balance out the variability of renewable energy output by either injecting energy into the grid, or by harnessing energy from the plant according to the schedules.
Diesel offset	High costs are associated with the purchase, transport and storage of fuel. The insurance needed to run diesel generators adds to the financial pressure on operators of unreliable grids and off-grids. Furthermore, the pollution associated with running diesel generators inefficiently when ramping to match demand is a growing concern, especially in congested cities and areas of natural beauty. SIESTORAGE complements various generation resources by balancing power supply and demand. This enables diesel engines to be run more efficiently and less often, therefore reducing overall reliance on diesel fuel.
Frequency regulation	Grid frequency is an indicator of grid stability, and under ideal conditions will be either 50 or 60 Hz depending on the country. Differences between power generation and power demand cause the grid frequency to fluctuate, and can result in damage to equipment, unwanted tripping, or even a blackout. Grid operators use reserves to maintain grid stability in the event of an anomaly that has not been previously corrected as a result of grid inertia. Primary reserves are the fastest services and are first in line to stabilize frequency deviations or to 'stop the drift'. Thanks to the fast response times of SIESTORAGE technology, it can provide both upward and downward regulation, and can be used as an alternative to the conventional slower responding generators, therefore reducing costs and increasing supply reliability.
Peak load management	Managing variable loads is associated with high costs caused by purchasing peak-load priced-power, high contract demand charges, infrastructure upgrades for assets used part-time, or even technical losses associated with underused assets. At the same time, the customers' expectations for cheap energy puts great pressure on plant and grid operators to optimize the performance of their assets and ultimately reduce operating costs. Using SIESTORAGE to utilize lower cost electricity and support load during peak times helps to reduce both power purchase (OpEx) and infrastructure (CapEx) costs.
Critical power	Voltage dips as a result of transient faults in the grid can cause malfunctions in sensitive process equipment such as variable-speed drives and robots. The nature of transient faults is unpredictable both in magnitude and duration, and those transients outside the ride-through capabilities of sensible devices can result in damage to those devices and, consequently, high production losses. Most dips can be addressed through reactive power compensation such as SVCs and StatComs. However, these devices respond only after about 20 ms. Online active power is therefore required in the form of Dynamic UPS or DUPS to provide support until the slower backup devices respond. SIESTORAGE and FAST SWITCH provide a cost-efficient and fast DUPS solution that is able to keep the deviation in the supply voltage under 10 % for times longer than 10 ms.

Table 2.3-2: Use cases

System description

Battery balancing for grids

SIESTORAGE is a modular energy storage system based on Li-ion battery technology. It provides a flexible solution for increased efficiency, greater asset utilization, and improved power quality in power generation, transmission and distribution.

With the help of SIESTORAGE technology, active power can be exchanged between an energy storage medium and a power grid. In addition, it can be used to provide reactive power to stabilize grid voltage.

Control and governance

The SIESTORAGE converter system (fig. 2.3-6) operates with one central controller, consisting of a real-time system for the fast control of voltage, current, frequency and power. The renowned, safe and reliable SIMATIC S7 provides governance control.

The SIMATIC HMI visualizes the current status, warnings and alarms, and is able to show data trend analysis for several values. All relevant information can be stored for later analysis. Optional Siemens service is available via remote access.

The SIESTORAGE control unit (SCU) is a real-time data acquisition and control system. It measures, records and analyses numerous signals such as AC voltage and power at the Point of Interconnection (POI) to the grid, status of the battery units, temperatures, and positions of switching devices. The SCU runs the control algorithms received from the SIESTORAGE master controller, which is regulated by the customer's SCADA system or an operator.

Configuration

A SIESTORAGE system comprises power converters, the SCU and the master controller, as well as LV / MV transformers and devices for protection, control and switching (fig. 2.3-6).

SIESTORAGE features and advantages

Flexible configuration covering all Battery Energy Storage Systems (BESS) applications

- Power Converter System (PCS) hardware and software developed specifically for BESS applications
- Grid-forming parallel operation with wind, solar and diesel possible
- Black start capability
- High system dynamics: POI voltage regulation within < 10ms
- High short-circuit power (2...3 × rated power)
- Choice of different external communication interfaces (IEC 61850, IEC 60870-5-104, DNP3 and others).

Worldwide operation

- Wide grid voltage range (for LV and MV grids and up to ± 15 % voltage deviation from nominal)
- Wide grid frequency range (45...65 Hz)
- CE-certified and UL/CSA-ready
- IEC- and IEEE-compliant
- Compliant with international grid codes.

High quality

- Best-in-class overall efficiency
- Longevity: design lifetime ≥ 20 yrs
- High reliability and availability
- IT security (remote access) according to IEC 62443-3-3.

Cutting-edge technology

- State of the art Power Conversion System (PCS) and battery technology
- Modular BESS design with wide capacity range.

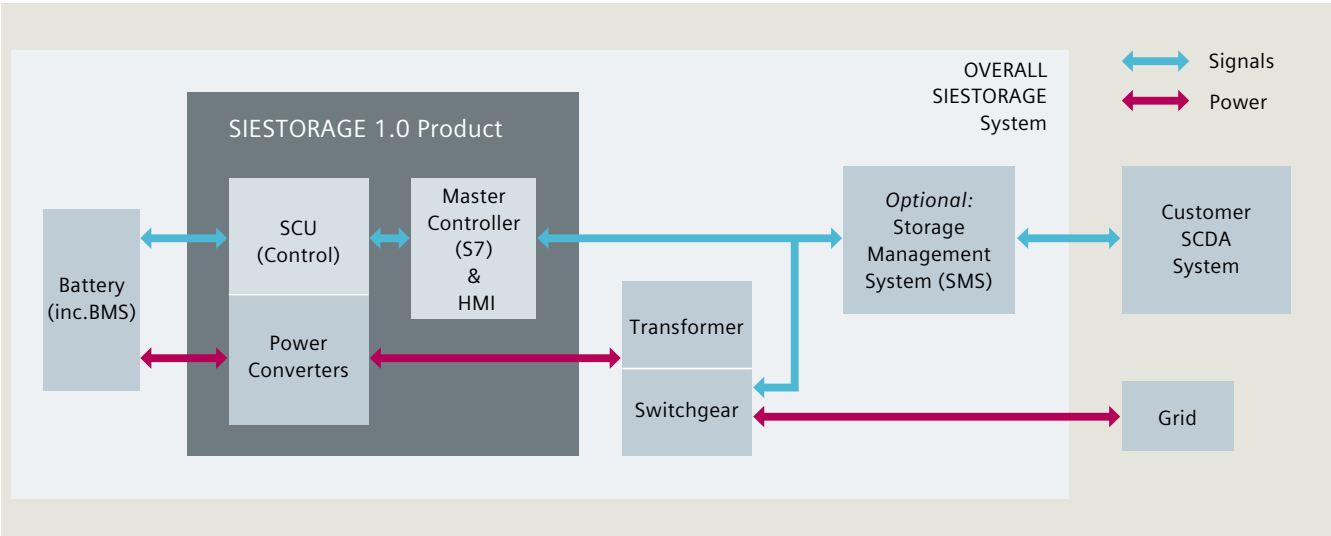

Fig. 2.3-6: Configuration system model

1
2
3
4
5
6
7
8
9
10
11
12
?

SIESTORAGE components

Efficiency through modularity

All the SIESTORAGE components are mounted in standardized cabinets (fig. 2.3-7) for easy setup. This enables quick and efficient configuration of scalable systems by simply adding the required number of each module type. The modules are designed to match one another perfectly in terms of control, operating power supply, and general connectivity.

Grid connection cabinet A *(fig. 2.3-8)*
- Cable terminations for grid connection
- Busbar system
- MV switchgear
  - For gas-insulated switchgear, type 8DJH is recommended
  - For air-insulated switchgear, type NXAIR is recommended.

Converter cabinet B *(fig. 2.3-9)*
- S nominal: 140 kVA or 800 kVA with update
- V nominal: 400 V.

Control cabinet C *(fig. 2.3-10)*
- HMI (Human-Machine Interface)
- SCU (System Control Unit)
- Ethernet switch
- 24 V DC power distribution
- Auxiliary power transformer.

Battery cabinet D *(fig. 2.3-11)*
- Use of various battery suppliers
- Technical data depending on partner technology and application specific.

Fig. 2.3-8: Grid connection cabinet

Fig. 2.3-9: Converter cabinet

Fig. 2.3-10: Control cabinet

Fig. 2.3-11: Battery cabinet

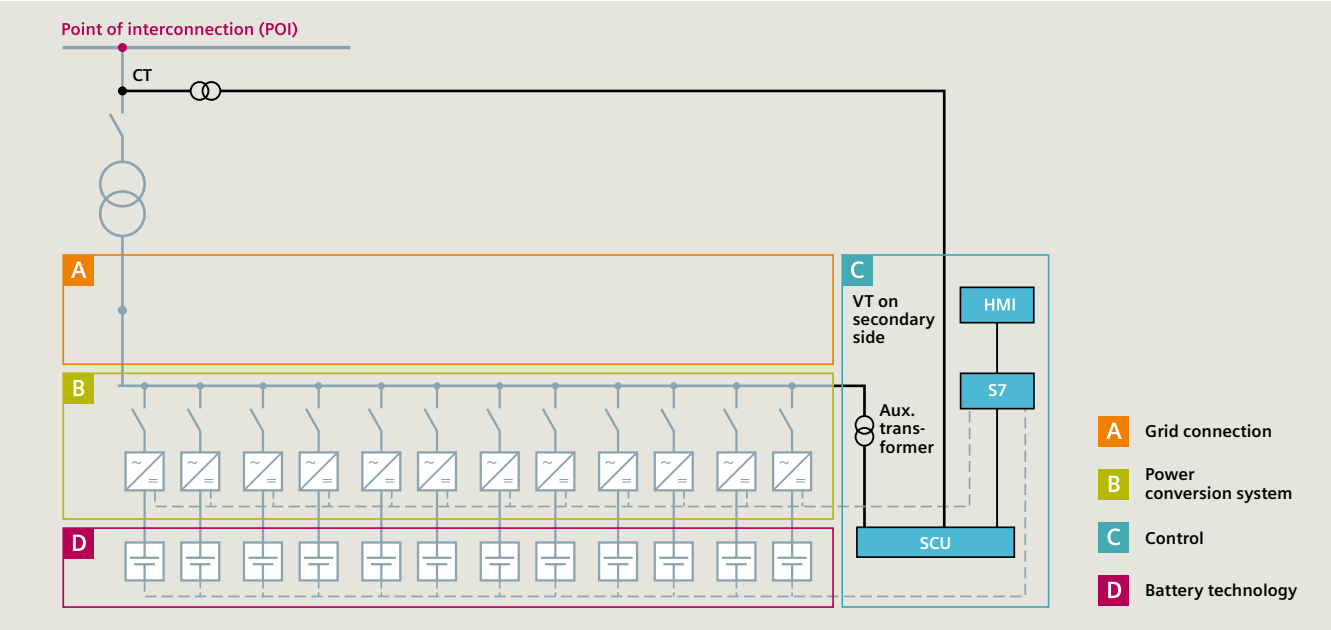

Fig. 2.3-7: Typical arrangement of cabinet modules in the SIESTORAGE system

1
2
3
4
5
6
7
8
9
10
11
12
?

Comprehensive portfolio

Quick setup times

The integration of the cabinets into containerized enclosures that are delivered as pre-tested and pre-commissioned systems helps to reduce expensive and time critical corrections on site. SIESTORAGE modularity provides design flexibility to meet a variety of requirements with regard to power and energy.

Standardized container layout

In general, one container can be divided into a maximum of five rooms with different climate zones. Usually, containers are divided for converters and batteries, as well as one for MV and LV components and transformers (fig 2.3-12).

Technology expertise

- Power electronics and storage system
- Low- and medium-voltage switchgear
- Transformers
- Energy automation and grid integration.

Implementation expertise

- Experience with grid operators
- E-house manufacturing
- Power packaging solution expertise
- One of the leaders in smart systems.

SICAM Microgrid Manager

The SICAM Microgrid Manager from Siemens is a fully developed end-to-end solution to monitor and control microgrids – a smart, user-friendly and versatile tool for energy management needs. It constantly monitors and controls the grid, the power generation, the energy storage, as well as the consumption, and is capable of representing complex structures in the process (fig. 2.3-13).

With the combination of SICAM Microgrid Manager software and the SIESTORAGE primary technology, Siemens provides a seamlessly coordinated portfolio of solutions.

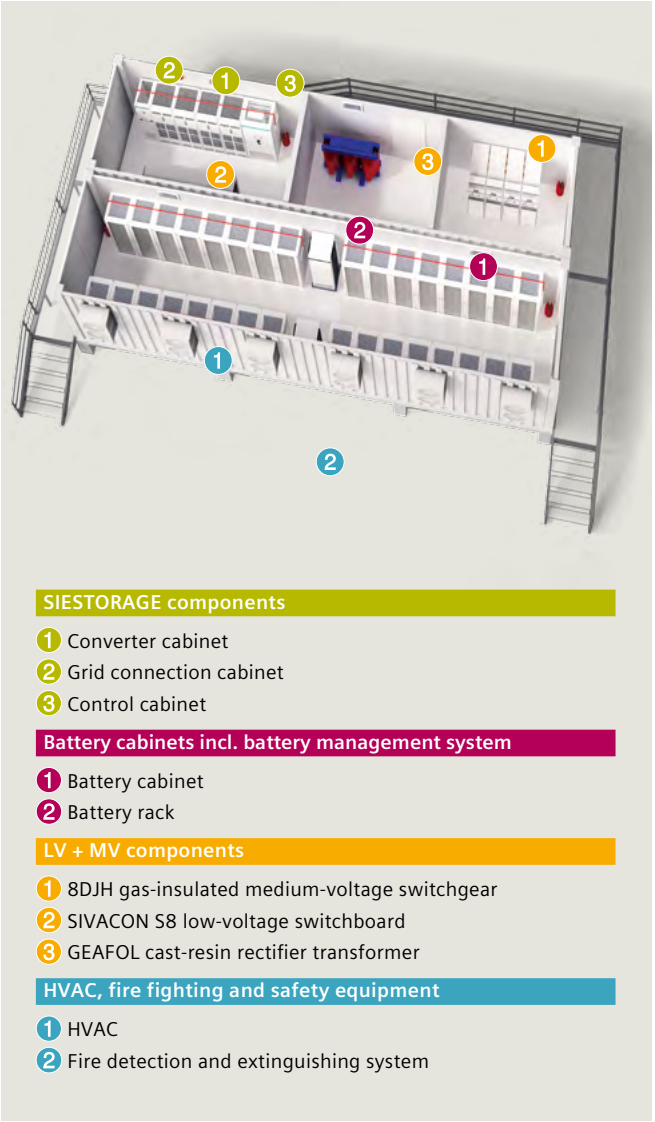

Fig. 2.3-12: Example of a typical containerized comprehensive solution

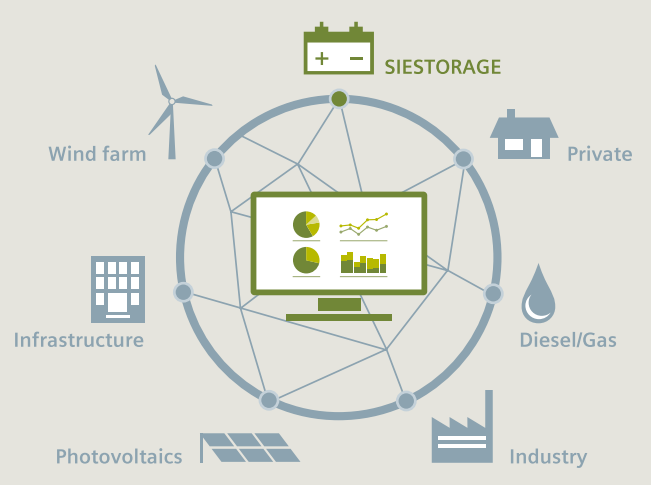

Fig. 2.3-13: SICAM Microgrid Manager

1
2
3
4
5
6
7
8
9
10
11
12
?

Lifecycle optimization

Taking a close look
Everything begins with an analysis of the grid or site to determine the adequate business model. A simulation of potential applications is carried out, including the efficient use of SIESTORAGE. Siemens offers a complete consulting service that includes power flow calculation and reactive power analysis, contingency analysis, short-circuit current calculation, probabilistic reliability analysis, dynamic stability calculation, and protection coordination.

Reducing interfaces
From planning through engineering and project management up to the complete integration, Siemens guides system operators through every step and all phases of the project. Reliable and competent local support is provided right from the planning phase to after-sales service (fig. 2.3-14).

Fully integrated solution
Siemens delivers pre-tested and pre-commisssioned systems wherever needed, either in containerized enclosures (fig. 2-3.15) or in an existing electrical building (fig 2-3.16).

Providing thorough service

Siemens supports local value creation and guarantees competent personnel in close reach of the system operators. The Siemens experts provide their experience in project management, financial services, and lifecycle management to every project. This enables them to help the system operators consider any aspect of safety, logitics, and environmental protection.

Fig. 2.3-15: Turnkey solution, fully containerized, SIESTORAGE at EDP in Portugal

Fig. 2.3-16: SIESTORAGE system installed in an existing electrical building at the steel mill of the AMEH in Eisenhüttenstadt, Germany

For further information please contact the Customer Support for Power & Energy:
Tel.: +49 180 524 70 00
E-Mail: support.energy@siemens.com
siemens.com/csc
siemens.com/siestorage

Analysis
of grid and user requirements

Development
of business cases

Planning
of the complete project

Engineering and project management
of components and system

Construction and integration
of components and systems

Commissioning and installation
in E-houses, existing buildings, or containers

Service
over the entire asset lifecycle

Fig. 2.3-14: One-stop solution

2.3.2 SIHARBOR / SIPLINK

New challenge in ports

Shipping is booming continuously, and more and more ships are docking at ports. Of course, this implies problems for the port operators, because the ship also has to generate power for onboard equipment, shops and air conditioning when berthed. This means that the diesel generators commonly used on board also have to run permanently in the port. This process generates large amounts of CO_2, NO_X and dangerous fine particulate matter. The emissions of a berthed ships can be compared to the environmental pollution of a medium-sized city.

Comprehensive solution with SIHARBOR

Power supply from the public grid – Reliable and clean
SIHARBOR enables the ships to get power from the onshore power grid when berthed, so that it will not be necessary to operate the diesel generators commonly used on board. Thus, SIHARBOR provides numerous benefits not only for port operators, but also for ship owners, local residents, and the port staff.

Safe and easy operation
A cable management system enables a safe and simple connection from the electrical building to the ship (fig. 2.3-17). In order to eliminate the residual risk of arcing in the plug-in connection, the cable connection to the ship is tested at rated voltage with low power before being connected. On a higher level, the SIMATIC S7 control unit with operator panel monitors the state of the whole SIHARBOR system centrally. Thereby, all relevant messages and data can be indicated, and all operating and safety functions can be selected. The control unit ensures that only permissible switching operations according to IEC/ISO/IEEE 80005 are executed. The personnel who operates the plug-in connection on shore and on board is protected by generally double electrical interlocks. Protection is ensured both by the software and by the hardware, independently of each other. The whole shore connection system can be remotely controlled from the ship without additional qualified personnel.

Everything from a single source
On request, SIHARBOR can be designed as a turnkey solution, from planning through system integration (with all LV and MV products and switchgear for connection to the grid) up to commissioning and service. The system can optionally be installed in a container or in already existing buildings.

Your benefit

- **For ships**: Reduction of maintenance costs and fuel consumption of the diesel generators in the port. Discounts for ships using the shore connection power supply system
- **For ports**: New business opportunities for the port operator by providing power supply for ships
- **For local residents and the port staff**: Improved quality of life by reduction of emissions, noise and vibrations

Fig. 2.3-17: Quick and easy connection to the ship via the cable management system

1
2
3
4
5
6
7
8
9
10
11
12
?

The frequency must be converted

In international maritime traffic, around 75 % of all ships are equipped with 60 Hz networks. However, only 25 % of the countries operate their power grids with this frequency. Therefore, the onshore frequency must be adjusted to the onboard frequency in 75 % of the countries. With the SIPLINK converter system and the SINAMICS SM120 CM converters, ships operating at 50 Hz and at 60 Hz can be supplied.

For all voltages and frequencies

With its modular concept, the system is perfectly adapted to all required power ratings, voltages and frequencies. SIHARBOR uses an isolating transformer to galvanically isolate the ship's network from the onshore power grid and other ship networks.

SIPLINK: Siemens Power Link

SIPLINK is a converter system adapted for network applications. It can connect two or more medium-voltage AC networks with different voltages, phase angles and frequencies. With SIPLINK, the voltage is adjusted by transformer tap changing and by modification of the converter output voltage. Thus, any required transfer voltage to the ship can be implemented (fig. 2.3-18).

A comprehensive solution with high efficiency

The SIPLINK system is based on the universally applicable SINAMICS SM120 CM. The system comprises the control system and the HMI (Human-Machine Interface) as well as a medium-voltage switchgear NXPLUS C especially designed for shore connection systems. This switchgear offers a long service life of 10,000 cycles of operation for the functions INTERRUPTING and EARTHING that is even suitable for heavily used shore connections.

The air-insulated MV switchgear type NXAIR is also especially suitable for application on ships due to its compact design, high flexibility, and robustness. Various ship classifications have been granted for NXAIR and the switchgear has been successfully installed on numerous ship types.

The perfectly matched components provide an efficient solution for ports and ships.

For further information please contact the Customer Support for Power & Energy:

Tel.: +49 180 524 70 00
E-Mail: support.energy@siemens.com
siemens.com/csc
siemens.com/siharbor

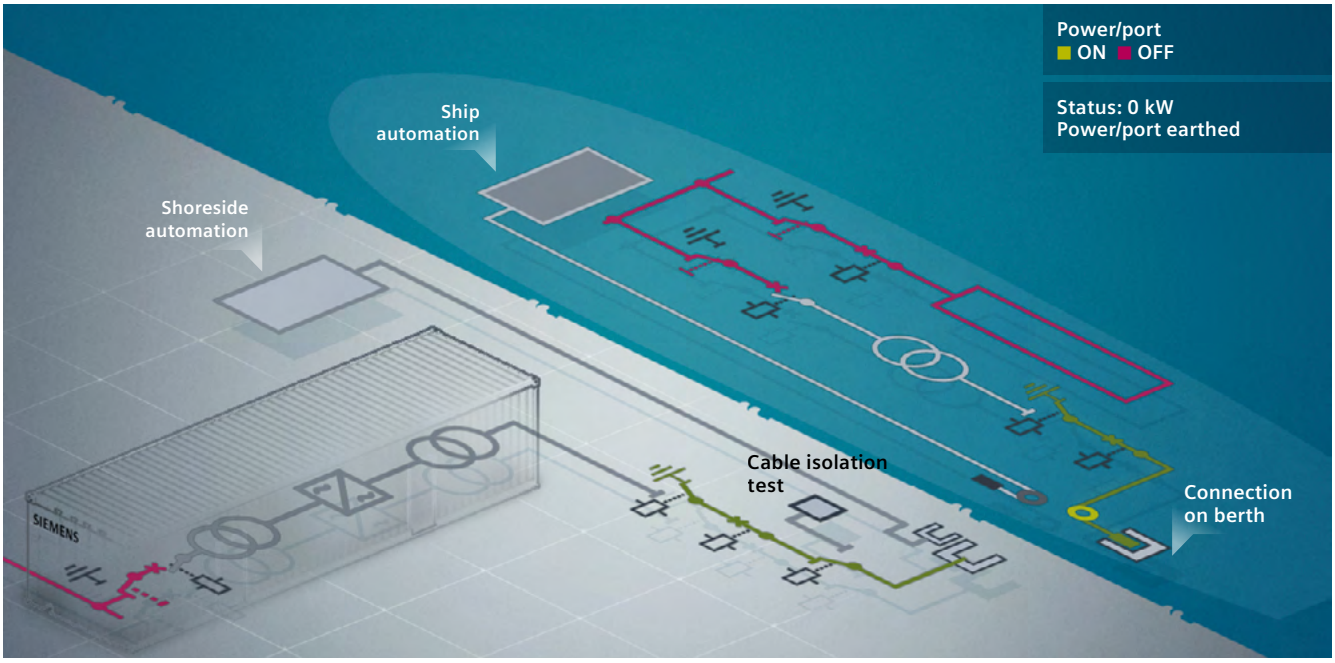

Fig. 2.3-18: SIPLINK converter system for network applications in a SIHARBOR solution

2.4 Portable power solutions and E-house

Plug-and-play power supply / portable power solution

E-houses, skids and mobile substations from 400V to 420kV

E-houses are pre-fabricated electrical buildings (power equipment centers) that are fully equipped and pre-tested for a fast and reliable power supply. They accommodate our comprehensive portfolio of high and medium-voltage switchgear, low-voltage switchboards, telecommunication and busbar trunking systems, control, protection, teleco-mand auxiliary equipment (fig. 2.4-1 – fig. 2.4-3)

The E-houses are completely developed, manufactured, assembled and pre-tested at the factory, connected and put into operation on site (fig. 2.4-4). They are therefore fast and easy to install and can be used as an interim solution. They are easy to upgrade, using available space optimally. This makes them a time-efficient and cost-effective alternative to conventional site-built substations for a broad range of applications.

Benefits of an E-House at a glance

- Cost-effective
- Fast to install
- Flexible
- One-stop solution.

Fig. 2.4-1: E-house Project Nacala (South Africa)

Fig. 2.4-2: High Voltage GIS E-house project for transmission susbstation (France)

Fig. 2.4-3: High Voltage GIS E-house project for a mine, New Caledonia

Fig. 2.4-4: E-House: Completely developed, manufactured, assembled and pre-tested at factory, shipped as one single unit or in splitting sections, installed, connected and commissioned on site

1
2
3
4
5
6
7
8
9
10
11
12
?

Alternative to conventional site-built power substations
E-houses have been a standard solution for power supply in the oil and gas and mining industry for many years. They are used ever more frequently for the installation of equipment in other industries and in infrastructure facilities.

A solid building is often too time-consuming for many projects. In other cases, the project schedule or the attributed restricted space do not allow for site-built construction, and sometimes building permits for conventional buildings are not available. E-houses are consequently the most suitable option to install electrical equipment in the industry, especially in Oil and gas (fig. 2.4-5), Metal industry, Mining industry (fig. 2.4-6) and Chemical industry.

Utilities (fig. 2.4-7), network operators (fig. 2.4-8) and the infrastructure business (fig. 2.4-9) also require a fast and reliable solution for critical or temporary power supply, the extension of transmission and distribution grids, the balance of plant for fossil and renewable power generation, grid coupling or connection of energy storage systems. E-houses are thus a fast and flexible solution for infrastructure (e.g. data centers), utility power plants and substations.

Fig. 2.4-6: E-house for mining in Columbia

Fig. 2.4-7: 245kV E-house for Transmission utility in Siberia

Fig. 2.4-8: E-house for the Georgian State Electric System GSE

Fig. 2.4-5: E-house for Oil&Gas in Qatar

Fig. 2.4-9: E-house for the Nacala-a-Velha port in Mozambique

1
2
3
4
5
6
7
8
9
10
11
12
?

Mobile substations on trailers or skids

Skid or trailer mounted substations are pre assembled modular substations designed to provide maximum flexibility for deployment and relocation. The substation is composed of one or several modules to be inter-connected on site: Power transformer, HV/MV/LV switchgears, HV/MV cables, control, protection, telecommunication, monitoring and auxiliary power systems,etc. The trailer or skid external dimensions are tailor made to comply with local road transportation restrictions. Their base-frame is specifically designed to protect switchgear from structural constraints despite transportation on rough road surface or single lift handling (see fig. 2.4-10 – fig. 2.4-14).

Fig. 2.4-12: 36kV / 12kV 16 MVA mobile substation

Fig. 2.4-10: 245 / 60-30 kV 40MVA mobile substation: Transformer trailer

Fig. 2.4-13: 245kV Mobile substations with HV cable connection

Fig. 2.4-11: 245 / 60-30 kV 40MVA mobile substation: High voltage switchgear trailer

Fig. 2.4-14: 145kV 10MVA skid substation

1
2
3
4
5
6
7
8
9
10
11
12
?

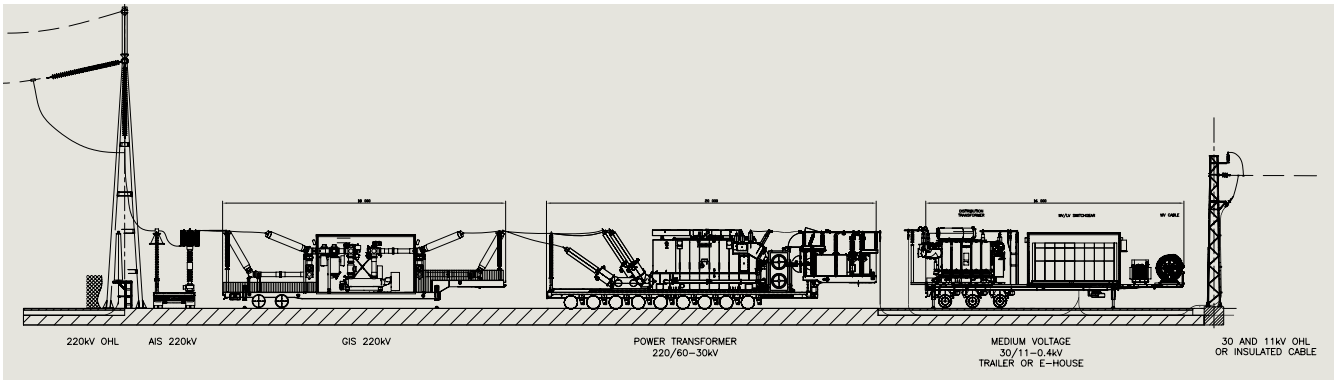

Fig. 2.4-15: Layout for a typical 245 kV in / out Bay configuration

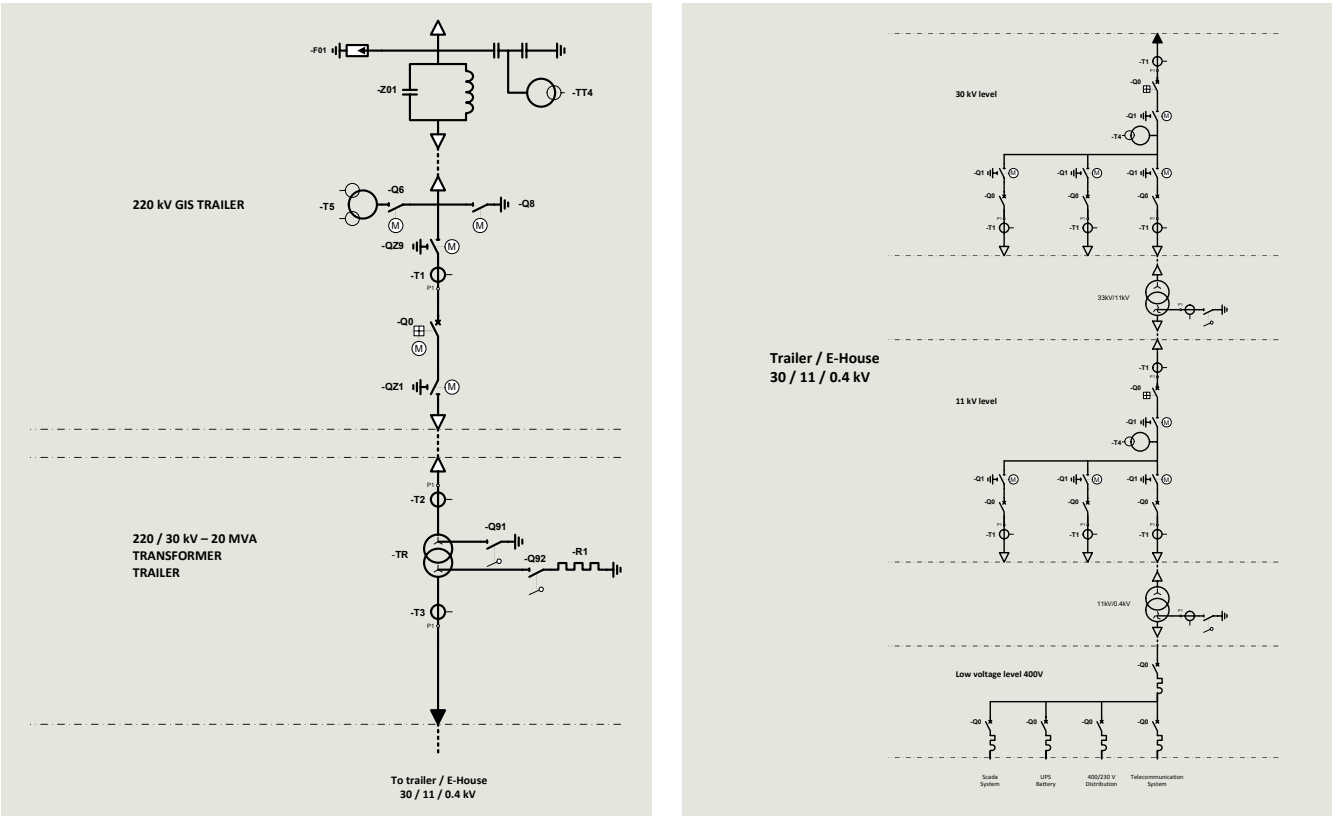

Fig. 2.4-16: Single line diagram for a typical 245kV in / out Bay configuration

Emergency or grid maintenance backup

A mobile substation is the perfect solution to provide a stand-by emergency grid restoration solution. It can be mobilized and set up in less than 48 hours in the event of a grid failure, hence reducing the technical and financial impact of power outage.

Mobile substation can also avoid power disruption during grid extension or rehabilitation works.

The various modules of mobile substations can be assembled one to the other in different configurations to create several configuration (e.g. In / out bays or even H type substation...).

Cost-effective solution

The standardization and the modular design of E-Houses leads to more flexibility and cost-efficiency. The expected saving potential for typical projects with E-Houses in a remote or hazardous area is up to 20 % of the total costs of ownership, comprising:

- Reduced cost in planning (interface management)
- Reduced manpower on-site (pre-fabricated)
- Reduced civil works on-site
- Reduced construction risks for a better HSSE* performance
- Flexible and space saving design
- Possible interim solution and relocation (fig. 2.4-17).

**HSSE: Health, Safety, Security & Environment*

1
2
3
4
5
6
7
8
9
10
11
12
?

Time-efficient solution

E-houses are fast and easy to install. Compared to a conventional site-built construction, the overall lead time related to an E-House is reduced up to 50 %, thanks to:

- Reduced civil works due to pre-fabrication and pre-test
- Reduced installation time through "Plug, commission & play"
- Reduced construction delays (e.g. due to weather or equipment interface management)
- Minimum interference with other on-site activities
- Reduced time in planning thanks to modular design
- Reduced time in planning in case a construction permit is not required (fig. 2.4-18).

High return on investment

Based on the above, prefabricated substation investment can be of high value added in energy critical cases such as:

- Earlier and secured energization of power critical plants, particulary in remote areas
- Temporary grid reinforcement further to seasonal load peaks
- Improvement of grid resilience by reducing the duration of power outage
- Streamlining of grid refurbishement program by the use of temporary backup substation during maintenance works.

Flexible and optimized design

The project and application requirements determine the type of an E-House:

- One module on pre-cast concrete foundation designed for single lift handling
- Modular design (adjacent or stacked) for split shipments (fig. 2.4-19)
- Mobile modules on wheels or skids for relocation with own baseframe.

Transportation constraints are a governing criteria for design:

- Road transportation regulations (dimension and weight) where applicable
- Transportation and handling methods.

Design requirements are also dependent on the environmental conditions:

- Weather (temperature, humidity, rain fall, snow and hail, ice and frost)
- Environment (altitude, radiation, wind loads, atmospheric pollution)
- Hazardous environment/substances (chemicals dangerous gases and vapors, dusts)
- Seismic conditions
- Corrosion classification.

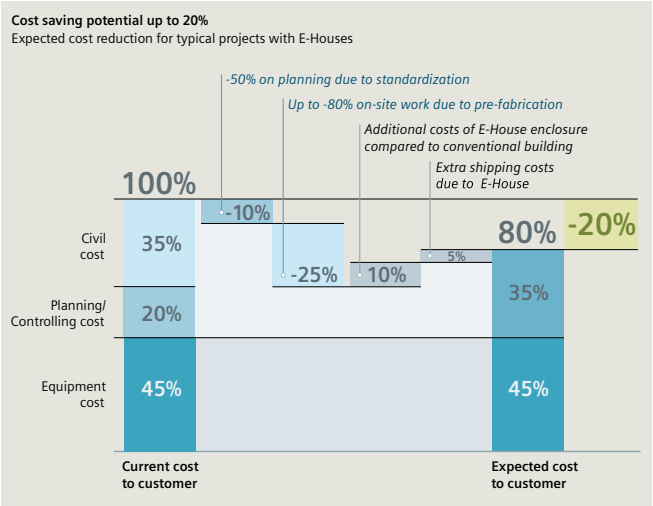

Fig. 2.4-17: Cost saving chart from MV E-house

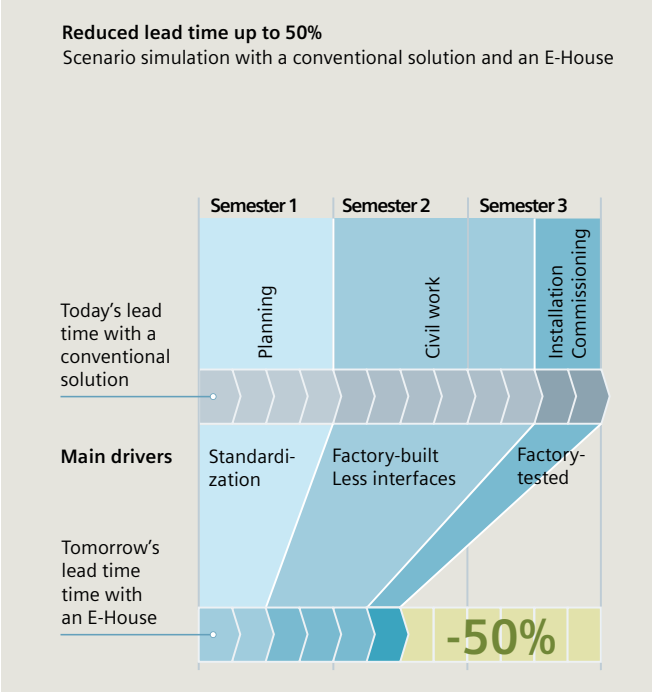

Fig. 2.4-18: Time saving of site work

Fig. 2.4-19: Modular design

1
2
3
4
5
6
7
8
9
10
11
12
?

Optimized design fitted to our HV, MV and LV portfolio
The design of an E-House starts with the overall electrical layout. The equipment list has to be defined as a first step. Every variable is taken into account, from the dimensions, heat dissipation to the weight of the electrical equipment and all the way to the project requirements like e.g. cable layout, external interfaces (fig. 2.4-20).

Pre assembled design starts from the transportation and handling restrictions requirement. This will govern the switchgear arrangement and power transformer tailored design, as well as the number of modules in which the substation will have to be splited.

The structural and mechanical analysis are then performed on the basis of structural and seismic calculations and simulations in 3D. A special design attention is given to mechanical stress sensitive equipment such as gas insulated high voltage switchgears. Combined mechanical efforts on structure and equipment during transportation and handling are analysed to generate a safe design for the entire substation (fig. 2.4-21, fig. 2.4-22).

The manufacturing or procurement of wall, roof and floor panels also depends on the project requirements (environment), on standards and on the weight of the equipment to be installed. Access doors, explosion proof battery rooms with separate ventilation, pressure release system, etc... are essential parts of the design process focusing on maximum personnel and equipment safety.

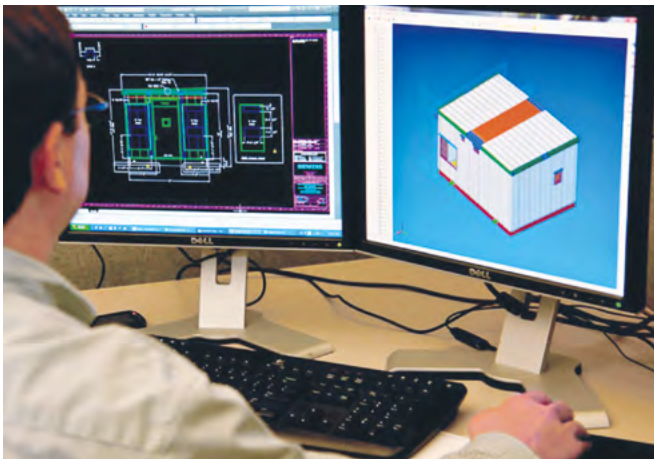

Fig. 2.4-20: The design of an E-House starts with the overall electrical layout

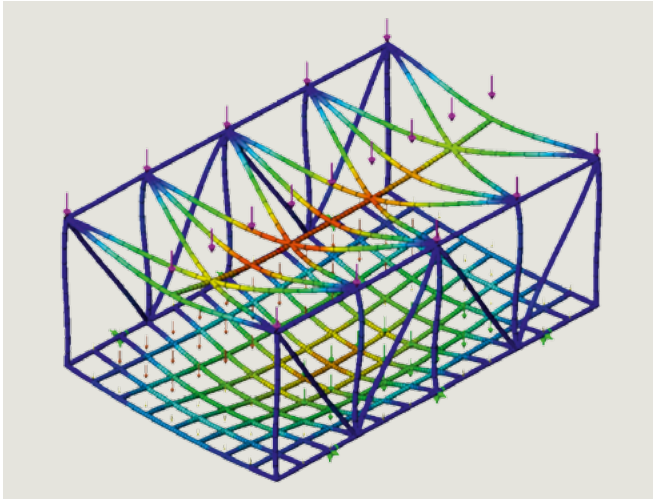

Fig. 2.4-21: Structural mechanical design for E-House: Static and seismic calculation using FEM method

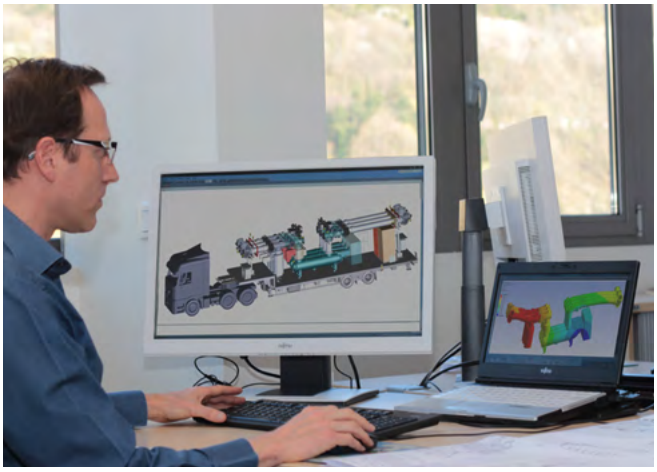

Fig. 2.4-22: Structural mechanical design for mobile substation: combined trailer & HV GIS Mechanical stress analysis during transportation

1
2
3
4
5
6
7
8
9
10
11
12
?

Auxiliary equipment fitted for ambient conditions
Last but not least, there is a wide range of auxiliary equipment that can be selected according to the local, individual HSSE* requirements, standards and regulations. It includes lighting and earthing systems, sockets, distribution boards, cable trays, electrical metallic tubing, and plug accessories.

To ensure safe operation, prefabricated substations can be equipped with, fire and smoke detection systems, fire fighting systems, emergency exits, and access control. A heating, ventilation and air conditioning system (HVAC) for smooth operation at high ambient temperatures, can be installed on the roof, inside or outside of any E-house. Air filtration systems, gas-detection, pressurization and pressure-release systems can be added (e.g. for hazardous areas).

A comprehensive solution
With Siemens prefabricated substations, you benefit from a single interface competence for the overall electrical design, the structural mechanical design and for the procurement of HV, MV, LV portfolio and the auxiliary equipment (fig. 2.4-23, fig. 2.4-24).

Benefits:
- High flexibility due to modular design
- Space saving design (depending on dimensions, weight and heat losses of the equipment)
- Optimized design perfectly-fitting to our HV, MV and LV Portfolio.

**HSSE: Health, Safety, Security & Environment*

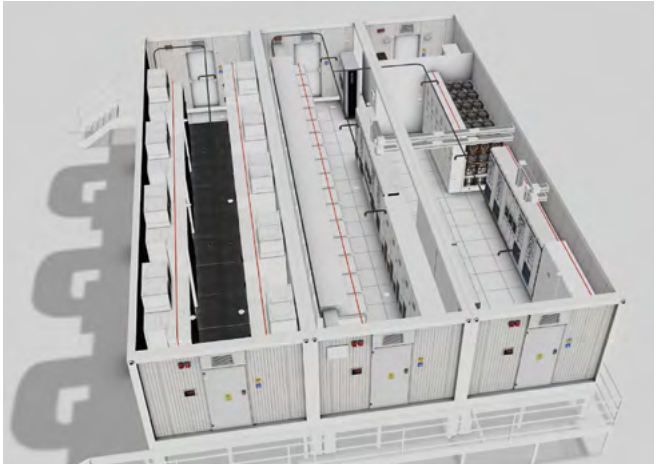

Fig. 2.4-23: Optimized design fitted to our MV and LV portfolio

Fig. 2.4-24: world first 420kV mobile substation

1
2
3
4
5
6
7
8
9
10
11
12
?

One-stop solution

Comprehensive and consistent portfolio

With its comprehensive and consistent porftolio, Siemens contributes to maximizing returns and optimizing energy consumption. Decades of experience and continuous innovation are the basis for this know-how. The results are integrated solutions with state-of-the-art components ranging from:

- Low, medium and High voltage switchgear (GIS and AIS) from 400V up to 420 kV
- Low and medium voltage motor control centers (MCC)
- Variable frequency drives (VFD)
- Oil and dry type transformers
- Control and protection systems,
- SCADA and energy automation systems
- Telecomunication system
- Analysers and monitoring systems
- Busbar trunking systems
- Power compensation devices
- MV and HV power cables on drums including cable terminations.

In addition, prefabricated substations are equipped with batteries, emergency diesel generator, Instrumentation, uninterruptible power supply (UPS) and a wide range of auxiliary equipment. With our E-house, skid or mobile substations, customers benefit from the consistency of Siemens' advanced technology competence in power supply solutions and expertise in implementation. Everything from a single source!

One interface through all phases of the project

Siemens is with its customers every step of the way through all phases of the project, from engineering to installation and commissioning. Reliable and competent local support is provided right from planning to after-sales service. Components and auxiliary equipment are globally sourced, and integrated in the E-House.
Siemens´production facilities and centers of competence are found around the globe. Siemens supports the local creation of value, and guarantees a competent contact person in close reach of every project. Siemens experts bring their experience in project management, financial services, and life cycle management to every project. This enables them to consider any aspect of safety, logistics, and environmental protection (fig. 2.4-25).

Benefits

- All equipment from a single source
- Reliability and safety thanks to proven Siemens products
- Application expertise
- Global experience
- One contact for the entire project
- Financing support.

For further information:

siemens.com/e-house
siemens.com/energy/portable-power-solutions

Fig. 2.4-25: Project life cycle management

2.5 Microgrids

A microgrid is electricity generation and loads, and in some cases storage, managed collectively in a network. Besides electricity, microgrids may include other vectors such as heat, gas and water. Microgrids manage energy resources according to a given set of criteria. They may be operated in off-grid, on-grid, as well as in dual mode to optimize technical (e.g., power quality, frequency) and economic aspects (e.g., optimal use of renewable energy). In an optional emergency mode, the microgrid provides black-start capabilities.

Siemens microgrid management systems (fig. 2.5-2, see next page)

- optimize use of intermittent generation, and increased efficiency by combining heat and electricity generation
- increase stability of supply and grid resilience through on- and off-grid functionality
- optimize energy management for reduced or better controlled energy costs and CO_2 footprint
- optimize economic performance of energy system through peak load management and limitation of grid extensions.

2.5.1 Operation, monitoring, administration, planning – all under one roof

The Siemens microgrid management system monitors and controls grids with large and small distributed energy generators, renewable assets, storage, and loads. The scalable system helps to automate, display, alarm and control all elements in the grid, thus assuring the needed quality of supply at all times. It generates schedules, automatically monitors their observance, and readjusts them in real time. This is enabled by automatic switching sequences based on rules or forecasts that draw on a large number of constantly updated parameters –such as weather forecasts, type of plant or power price. Siemens solutions also help to efficiently incorporate such as cogeneration plants. Intelligent networking of energy infrastructure using Siemens microgrid management systems not only increases the added value of the power supply, but also protects its operation from outages, regardless of whether the microgrid is connected to the supply network or not. Siemens' solutions are flexible and expandable – today and in the future (fig. 2.5-2, see next page).

Intelligently managing microgrids

Siemens microgrid management systems are the ideal solution to ensure the most optimized control of fluctuating electricity generators within a microgrid. The tailored solutions meet the individual challenges of each power scenario with a modular structure and flexible scalability. This means that our system operators receive a software solution exactly tailored to their needs. Microgrid administration comprises a range of intelligent, versatile and user-friendly tools for a wide range of applications. End-to-end SCADA and numerous functions for forecasting, planning and real-time optimization support in:

- Monitoring and controlling the microgrid components
- Monitoring and controlling generation
- Monitoring and controlling consumption
- Providing ancillary services
- Buying and selling power.

It is flexible, direct and progressive.

Benefits

- All equipment from a single source
- Reliability and safety thanks to proven Siemens products
- Application expertise
- Global experience
- One contact for the entire project
- Financing support.

Fig. 2.5-1: Microgrid manager balancing load, generation and storage

1
2
3
4
5
6
7
8
9
10
11
12
?

Trouble-free engineering

The intuitive design tools are a core element in the microgrid management system. Even the most complicated power infrastructures can be represented digitally with just a few clicks of the mouse. This saves time and minimizes the potential for error, thanks to many automatic support functions.

Benefits of a fully integrated microgrid solution

- Modular construction, flexible and scalable
- Reliable microgrid operation
- Intuitive modeling and parameterization
- Intelligent forecasting and planning
- Simple, real-time optimization
- Incorporation of distributed generators, storage units and loads
- No 24/7 operator required.

2.5.2 Microgrid market segments

According to today's experience and publications, there are four major microgrid market segments:

Institutional microgrids – the challenges of renewable energy

Rising energy prices, as well as reliable and resilient energy, are increasingly becoming concerns to large energy consumers. Fundamental business changes such as market deregulation offer new opportunities for corporations, governmental organizations, municipalities, and universities to manage their energy supply optimized for their own use. Siemens delivers tailored solutions to meet energy goals, like energy reliability, sustainability, resiliency, or economic aspects. By adding renewable generation sources and storage to the microgrid, the reliability of energy supply increases, and costs are reduced. As multiple generation sources and energy assets are added to a microgrid, advanced control functionality is required to ensure the system is operating as efficiently as possible (fig. 2.5-3, see next page).

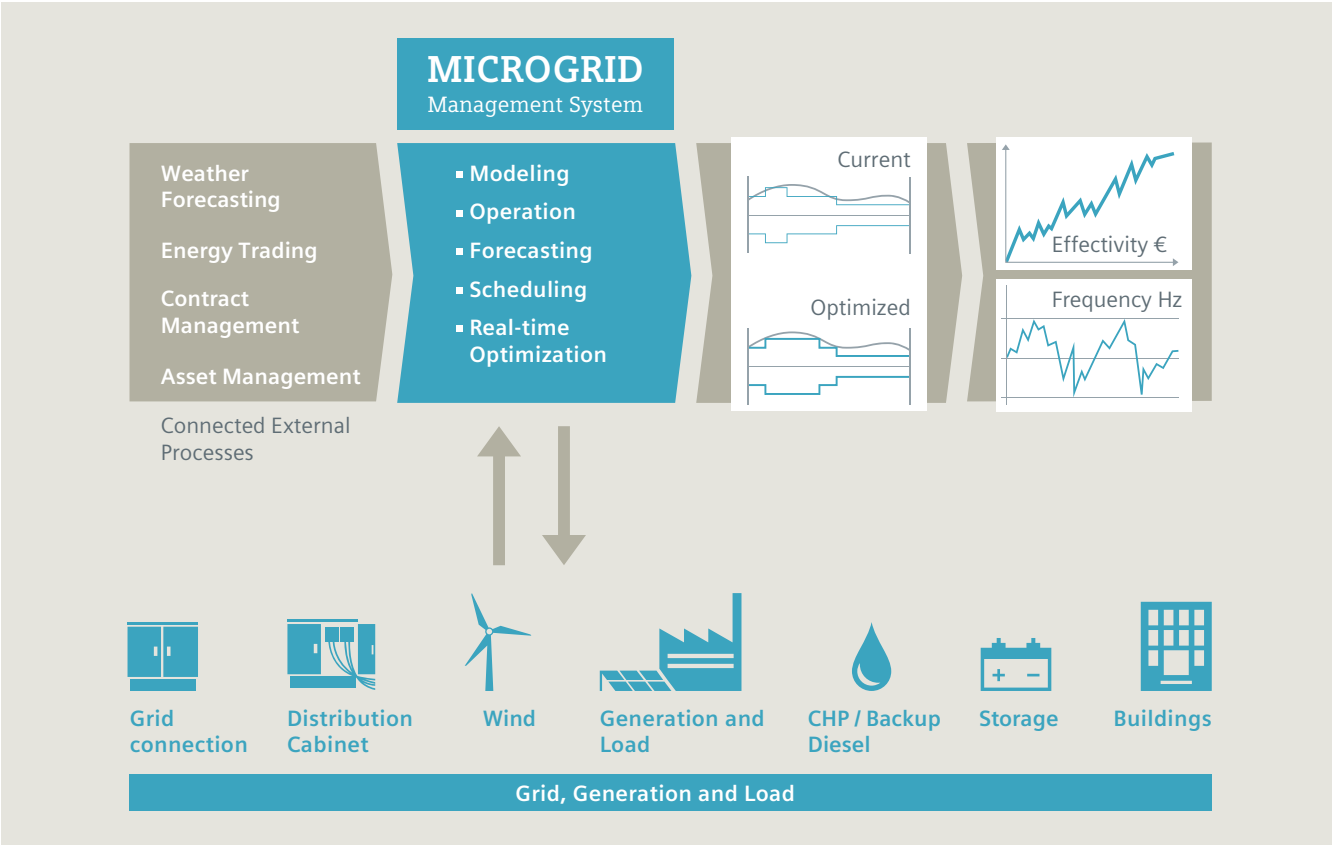

Fig. 2.5-2: Operation, monitoring, administration, planning – all under one roof

1
2
3
4
5
6
7
8
9
10
11
12
?

Critical infrastructures microgrids – renewable energies in critical environments

For operation of critical power grid infrastructures, the increasingly deregulated energy market and the advances in renewable energy sources offer both opportunities and challenges. The use of renewables to supply critical infrastructure increases the independence from grid supply and lowers operating costs, especially since surplus electricity can be sold. If storage systems are used, operations can adopt the form of an electrical island, providing security in case of emergencies such as storms. Fluctuations in electricity generation in a microgrid demand intelligent control mechanisms, reliable forecasts, and – especially in island mode – a balance between available power and power consumed (fig. 2.5-4).

Microgrids in remote locations – stable power supply for weak grids

For the operation of power grids in remote locations, the advances in renewable energy sources offer both opportunities and challenges: By incorporating renewable and storage facilities in the supply systems, operators can cut their power costs dramatically – while increasing grid availability even in poorly supplied areas. Wherever the transportation of fossil fuels over long distances is costly and unreliable, the use of wind or solar plants can take a lasting improvement in terms of both independence and economic efficiency. Fluctuations of electricity generation in a microgrid demand intelligent control mechanisms as well as reliable load and generation forecasts. It is essential to maintain a balance between energy generated and energy consumed (fig. 2.5-5).

Industrial microgrids – modern energy challenges and chances

Operators of industrial power grids face two major challenges: They need to optimize their average production costs – which includes ensuring a secure and reliable power supply to assure production – and at the same time reduce CO_2 emissions. The use of renewables to supply industrial facilities reduces both CO_2 emissions and the requirement for imported electricity. This lowers operating costs, especially since surplus electricity can be sold. If storage systems are used, it allows operations to take the form of an electrical island, ensuring smooth production, regardless of a public power supply that in many locations may be insufficient. Fluctuations in electricity generation in a microgrid demand intelligent control mechanisms, reliable forecasts and – especially in island mode – a balance between available power and power consumed (fig. 2.5-6).

Fig. 2.5-3: Institutional microgrids – the challenges of renewable energy

Fig. 2.5-4: Critical infrastructures microgrids – renewable energies in critical environments

Fig. 2.5-5: Critical infrastructures microgrids – renewable energies in critical environments

Fig. 2.5-6: Industrial microgrids – modern energy challenges and chances

1
2
3
4
5
6
7
8
9
10
11
12
?

2.5.3 Siemens microgrid management systems

To meet decentralized infrastructure development needs and provide advanced functionality to maximize value, Siemens supplies scalable microgrid management systems and solutions based on automation equipment in the SICAM series, and software solutions based on the leading Spectrum Power™ platform. These systems provide solutions for microgrids covering energy and optionally heat. Depending on the case of use, the solution can range from field devices for equipment control over decentralized automation to a fully functional microgrid manager.

For small to medium-sized microgrids covering energy and optionally heat, the Microgrid Manager is focused on 24/7 autonomous control with minimum operator intervention (fig. 2.5-7).

Functionality

- Grid monitoring and control
- Small and large distributed generator control (electrical power, heat)
- Storage control
- Load control
- Generation forecast
- Load forecast
- Schedule optimization.

For medium- to large-sized microgrids covering electricity and optionally heat, the Microgrid Manager offers advanced application functionality, market interface, as well as enhanced consideration of grid constraints, and can be enriched with applications up to a full distribution management system.

Functionality

- Grid monitoring and control
- Small and large distributed generator control (electrical power, heat)
- Storage control
- Load control
- Generation forecast
- Load forecast
- Schedule optimization
- Online control.

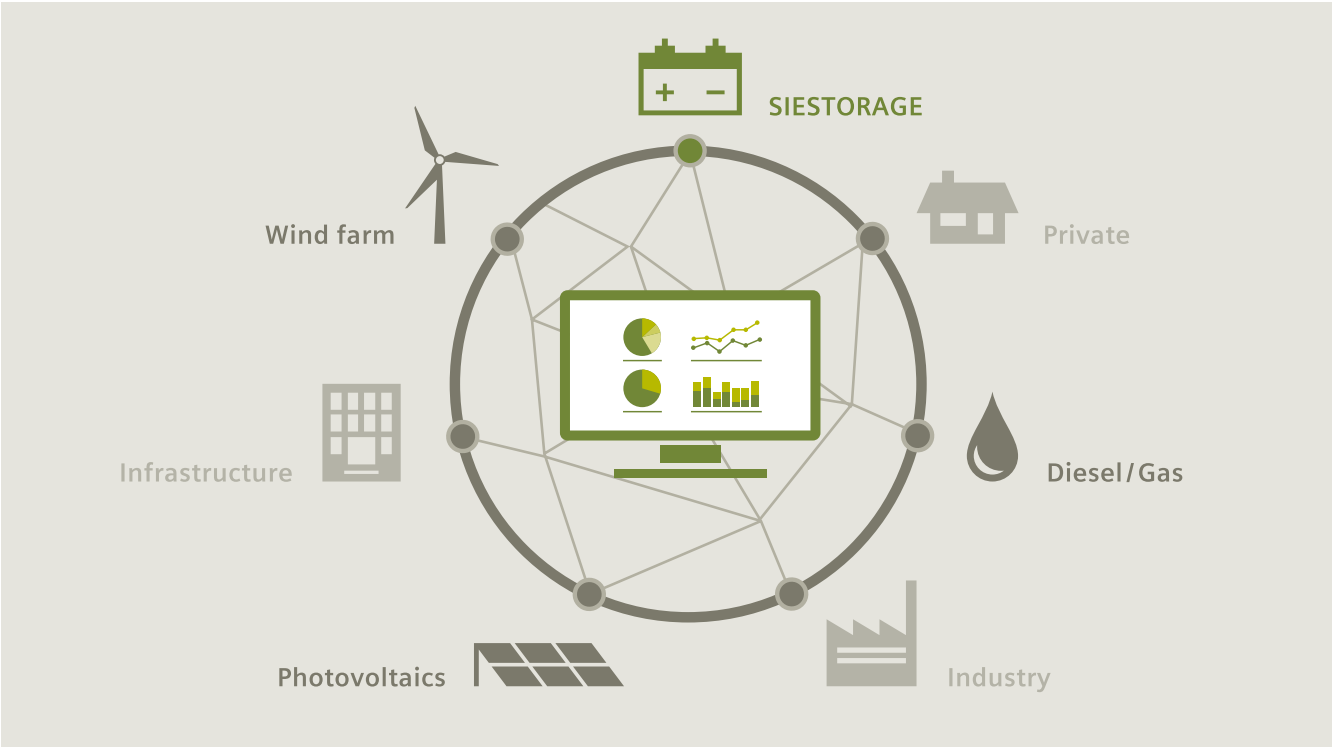

Fig. 2.5-7: Schematic diagram of the layout of a Microgrid Manager

2.6 Intelligent transformer substations

The requirements on power distribution and therefore on medium- and low-voltage grids are increasing continuously. Changing directions of power flow, load and voltage fluctuations, which are caused especially by the strongly growing number of power supplies from volatile power sources, e.g., photovoltaic/biogas plants and wind farms, make the distribution grids of today go to their capacity limits.

Always well supplied – no chance for blackouts

Many of today's transformer substations, originally designed for a merely unidirectional energy flow and equipped with conventional transformers, are no longer capable of coping with the effects of volatile power sources. The consequences are more and more frequent supply breakdowns in the classical distribution grid, with ever increasing downtimes. In order to reduce such downtimes notably and to limit the associated blackout costs, quick adjustments to the changed load conditions must be possible.

Active distribution grid with intelligent transformer substations for a smooth infeed of renewable energies

While the additional load capacity required due to the expansion of renewable energies can be provided by means of grid expansion, the effects resulting from the alternating direction of power flow, load fluctuations, and voltage range limitation can only be handled with intelligent solutions. The answer is an active distribution grid with intelligent transformer substations as key components. These contribute to an active load management in the distribution grid, and enabels an automatic and fast fault clearance in case of blackouts. In this way, system operators are always well supplied.

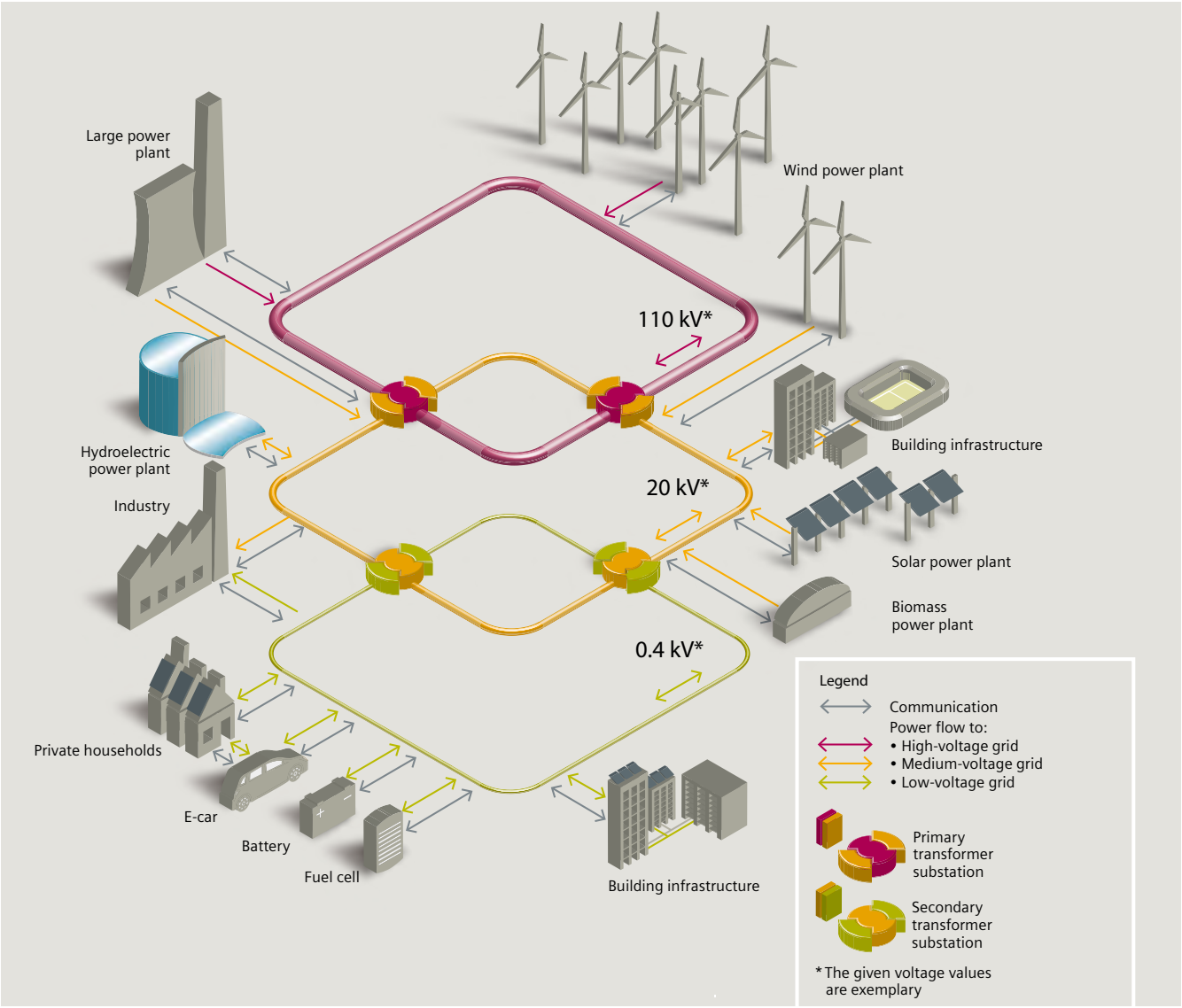

Fig. 2.6-1: Active distribution grid with intelligent transformer substations

Benefits of intelligent transformer substations

- Monitoring and assurance of power quality
- Controlling of overload situations
- Minimization of loss of power grid revenue by notably reduced interruption times
- Optimization of grid expansion
- Object monitoring of the transformer substation.

Components for the different tasks

Modular design

The following components can be integrated in an intelligent transformer substation:

- Remote terminal units SICAM A8000
- Uninterruptible power supplies SITOP
- Communication solutions with TCP/IP, GSM, UMTS, LTE, WiMAX, BPL, etc., e.g., with SCALANCE or RUGGEDCOM
- Short-circuit/earth-fault direction indicators SICAM FCM, SICAM FPI
- Current and voltage sensors.
- Regulated distribution transformers FITformer® REG
- Power meter/power quality recorder SICAM P850/855
- Medium-voltage switchgear from the 8DJH family
- Decentralized energy management DEMS
- Control center system for utility companies SICAM 230
- Switchgear visualization SICAM SCC
- Connection to:
  network control system SINAUT PowerCC
- Substation automation SICAM PAS/AK 3
- Electronic meters AMIS
- Protection and switching devices from the SENTRON portfolio for protection of the low-voltage power distribution.

Solutions out of one hand make the distribution grids ready for the challenges created by the growing integration of renewable energies. In addition, they allow utilities a more efficient operation of their infrastructure, thus offering important competitive advantages.

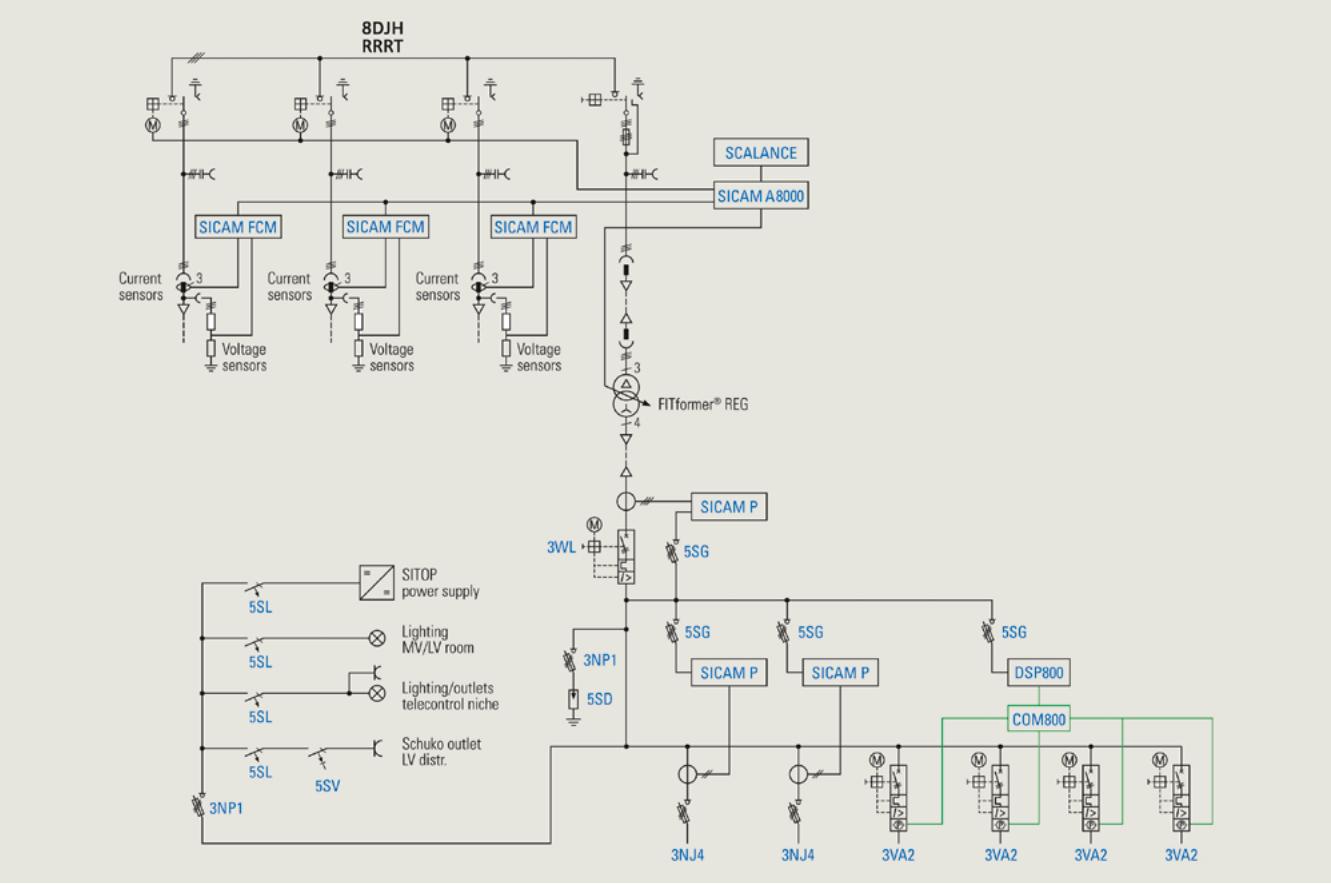

Fig. 2.6-2: Suitable components for an intelligent transformer substation

1
2
3
4
5
6
7
8
9
10
11
12
?

Conceptual design of an intelligent transformer substation

The above illustration shows the conceptual design of an intelligent transformer substation

1 Medium-voltage switchgear
Equipped with motor operating mechanisms to actuate the switch-disconnectors or circuit-breakers from external switching points (e.g., network control center), sensors to measure currents and voltages, and intelligent short-circuit/ earth-fault direction indicators.

2 Transformer
Standard transformer or regulated distribution transformer.

3 Low voltage
Protection with integrated measuring functions, motor operation, and communication for power monitoring and energy management of the individual low-voltage feeders.

4 Telecontrol unit
RTU*, communication device, uninterruptible power supply.

** Remote Terminal Unit*

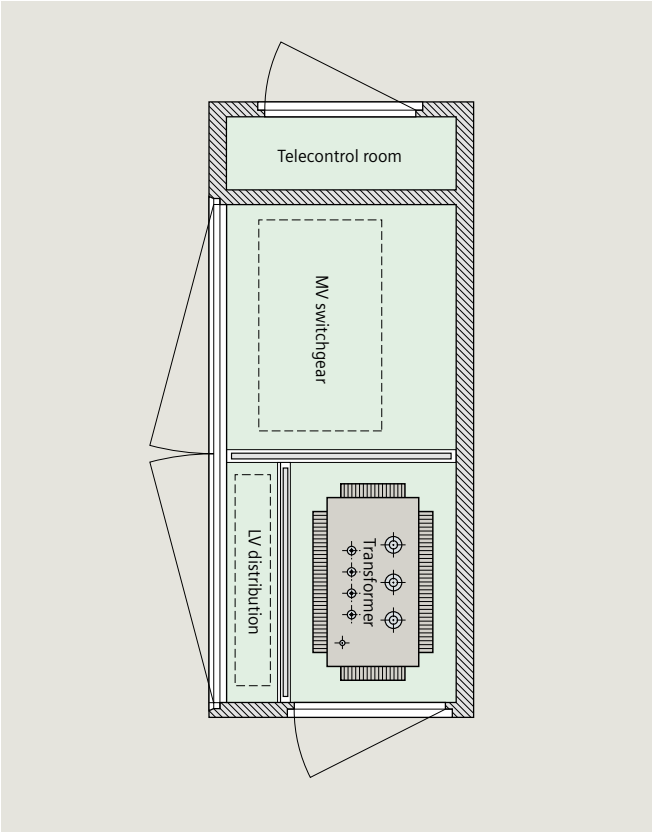

Fig. 2.6-4: Typical room planning of a transformer substation

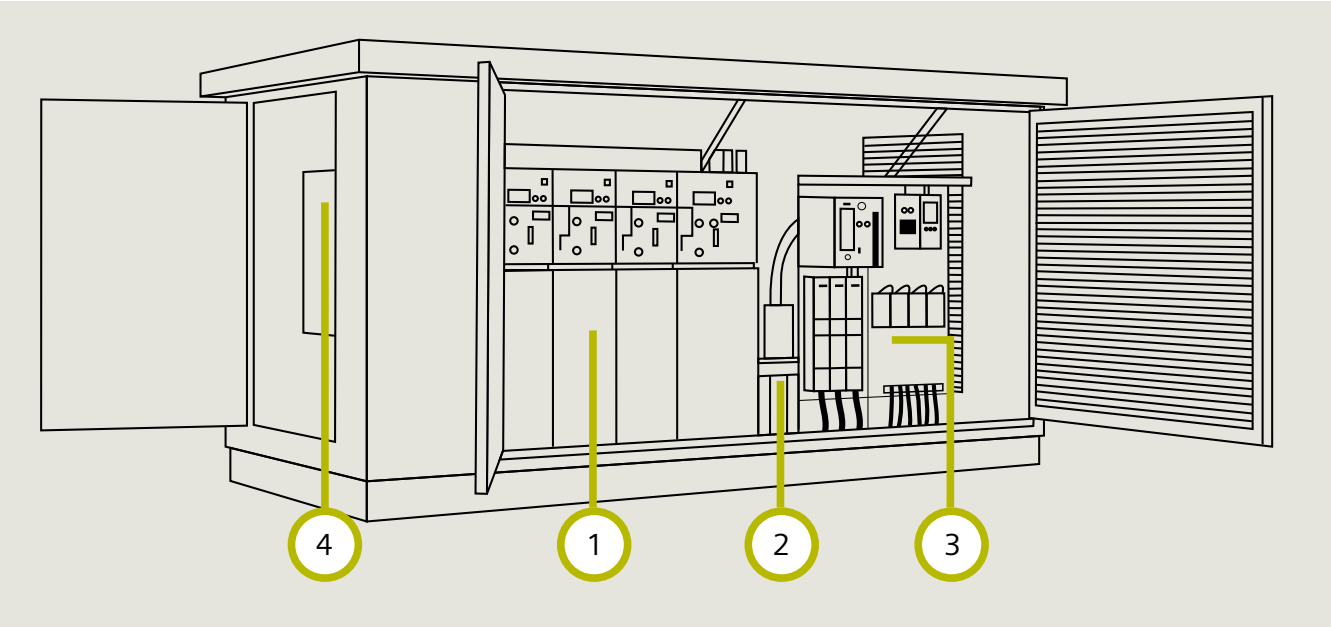

Fig. 2.6-3: Intelligent transformer substation

1
2
3
4
5
6
7
8
9
10
11
12
?

The key components in the grid

Planning, design and maintenance of a smart distribution grid are complex tasks for municipalities and distribution grid operators. The ability to seamlessly integrate sensors, actuators, communication, and IT systems into the existing infrastructure significantly reduces these challenges. Intelligent transformer substations – with switchgear, transformers, protection devices, as well as telecontrol and automation solutions – allow applications for higher reliability of supply.

Intelligent transformer substations as key components of the modern distribution grid

In the future, transformer substations will become a key component in the distribution grid.

Intelligent transformer substations allow for:

- Management of the low-voltage distribution grid for each outgoing feeder with handling of meter data, compensation of reactive power and harmonics, regulation of the distribution transformer, as well as the coordination of supply and load.
- Supervision and control of the transformer substation on the medium-voltage side regarding fault location and automatic recovery of supply.
- Provision and transmission of measured values and indications from the medium- and low-voltage system.

Fig. 2.6-5: Intelligent transformer substation

1
2
3
4
5
6
7
8
9
10
11
12
?

Three levels of intelligence

In order to conform to the increased requirements also in the future, three levels of intelligence can be implemented.

In the first level, the focus is on substation monitoring, in order to increase the availability and to allow for a fast fault localization.

The second level contains, besides monitoring, also the possibility to telecontrol the switchgear, thus allowing the minimization of downtimes.

In the third level, the effects of decentralized power supplies are managed via automation. Grid losses can thus be notably reduced.

By installation of intelligent control, measurement and regulation systems, conventional transformer substations can be upgraded step by step. In this way, they are perfectly prepared for their integration into Smart Grids. Depending on the desired expansion level, the necessary components must be configured.

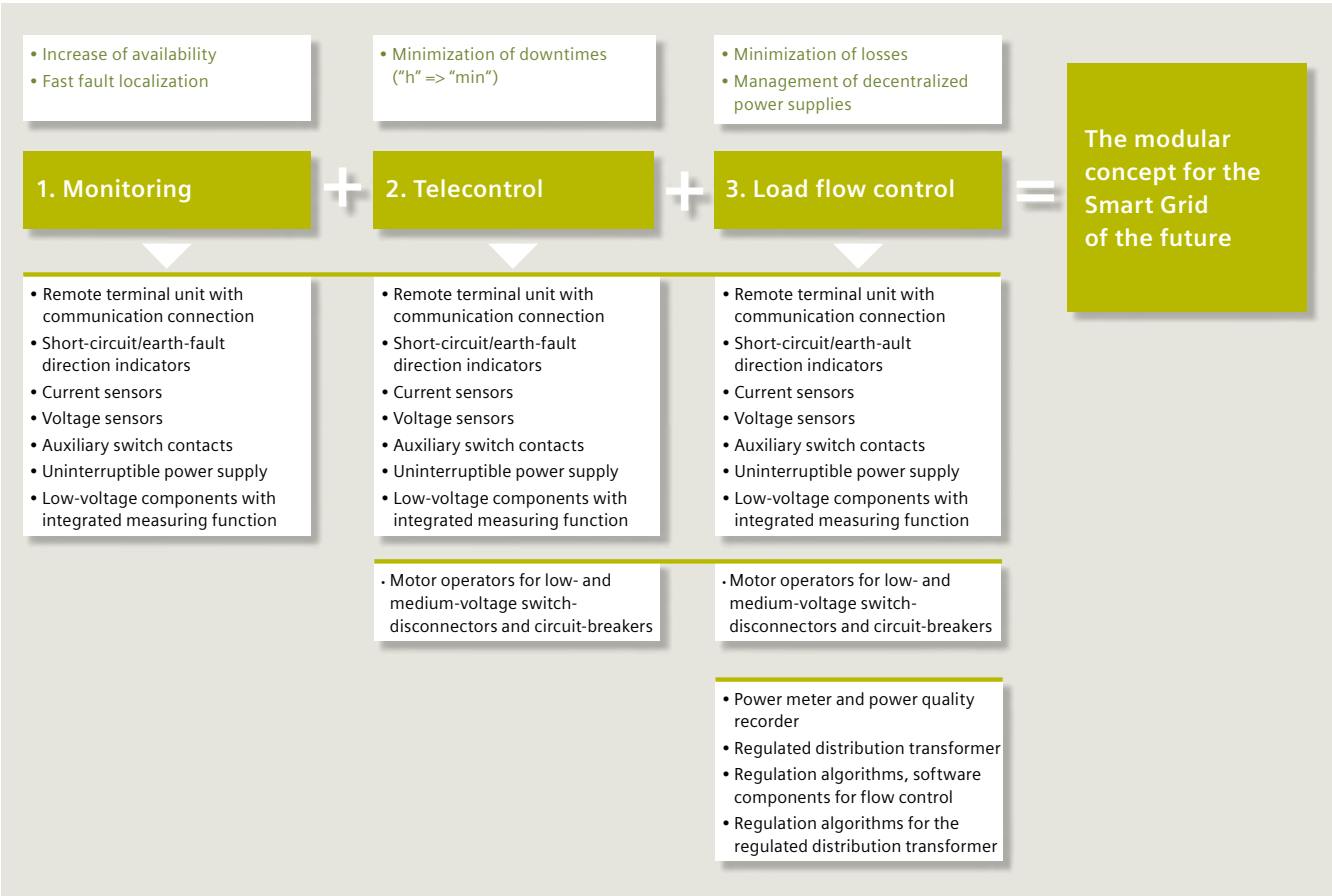

Fig. 2.6-6: The illustration shows the stepwise expansion levels: monitoring, telecontrol and load flow control

2.7 Cyber security

2.7.1 Cyber security in energy management

Providing a cost-efficient, secure and reliable energy supply is the core business of electric utilities that operate critical infrastructure. The way grids are operated and managed has changed dramatically due to the integration of renewable and decentralized energy resources, the need for network optimization, the interaction with prosumers and consumers, and the participation of new market entrants. With information and communication technology penetrating down to the distribution network and even households, the growing interconnections create more points for potential attacks to critical infrastructure. Consequently, cyber security is top of mind for power system operators today.

As shown in fig. 2.7-1, one key target of a power system operator is security of supply, i.e. to ensure a stable supply of power at any time, at competitive costs and while considering regulations. From that perspective cyber threats are perceived as risks jeopardizing the security of supply. Cyber security encompasses all the measures dealing with mitigating such risks, following industry standards, and where relevant, meeting local regulation related to cyber security. To achieve this target, the power system operator:

- Must comply to related cyber regulations which describe 'What must be done'
- Should conform to related cyber standards that describe 'How it needs to be done'
- Shall mitigate cyber risks.

Cyber security controls can be implemented in the area of people and organization, processes, and products and systems. This reflects the so called '3'P's' relevant for a holistic cyber security approach.

Siemens products and solutions enable operators to be compliant with cyber regulations. Furthermore, the products adhere to international standards in order to support interoperability with third-party components. Siemens provides cyber security consultancy services that cover assessments for regulatory compliance and establishment of protection concepts for mitigating cyber risks in energy automation.

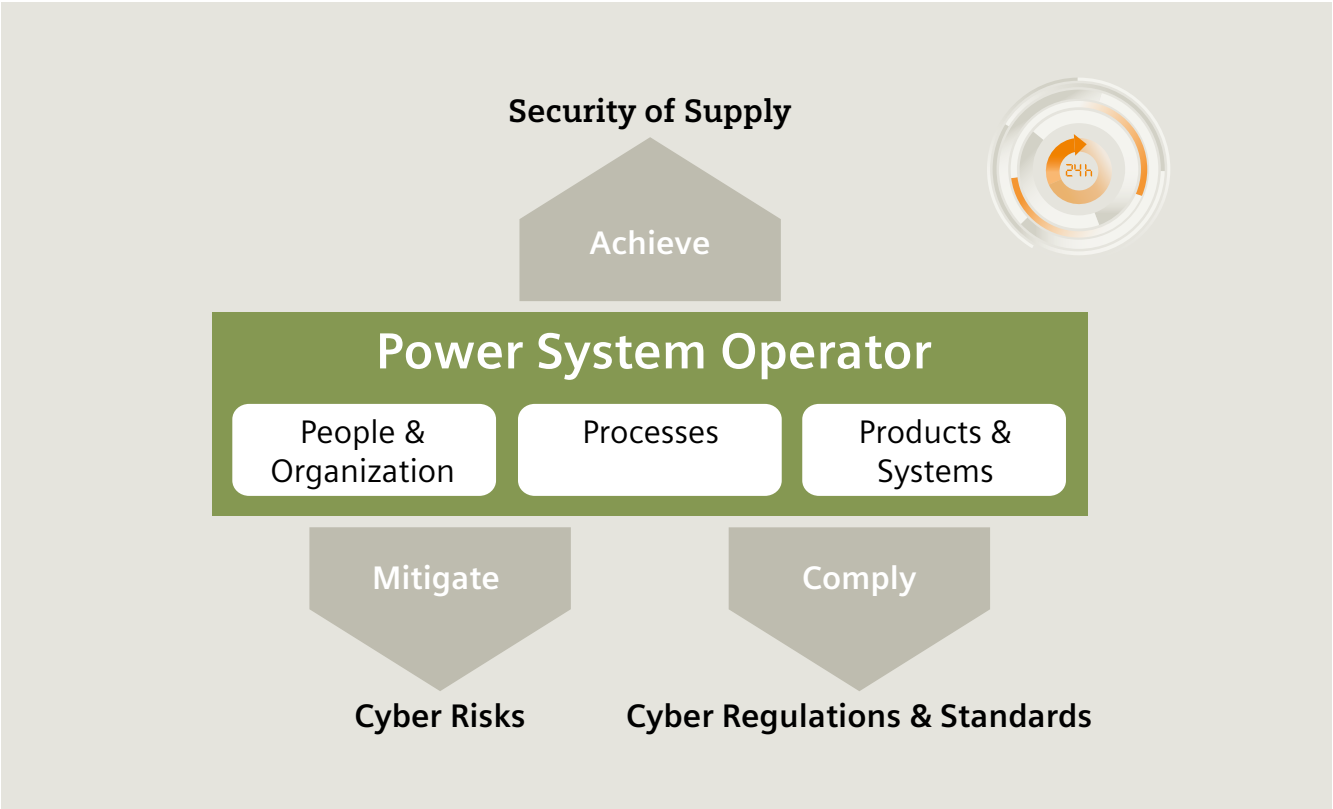

Fig. 2.7-1: Cyber security targets for a power system operator

2.7.2 Cyber security framework

The cyber security framework defines the way how cyber security has to be addressed by the various actors in the energy value chain. It is based on the following:

1. Cyber security regulation
   Cyber security regulations must be supported by all actors within the energy value chain.
2. Cyber security standards
   Existing international standards describe cyber security ranging from governance to specific realization options in products. The three key standards in energy automation are ISO/IEC 27001, IEC 62443 and IEC 62351.
3. Cyber security guidelines
   Guidelines give recommendations on cyber security implementation. The most common and recognized guidelines are: NERC CIP, BDEW whitepaper.

As part of the guidelines, Siemens defines 14 categories of security measures, see fig. 2.7-2. Reflecting a holistic approach to cyber security, these categories encompass the so called '3 P's':

- People and organizations: those who are running the company
- Processes: those used by the people and organizations to fulfill the business needs
- Products and systems: the underlying infrastructure to support the business needs.

Categories of security measures related to organization and processes are indicated in the gray boxes in fig. 2.7-2.

Security measures related to products and systems are categorized over the green boxes in fig. 2.7-2.

The categories of security measures are described here:

1. Organizational preparedness
Establish security measures to develop, integrate and maintain secure products and solutions. This impacts the whole organization in the form of defined roles, clear responsibilities, adequate qualification, policies, processes, tools, and communication. The information security policies at Siemens are in accordance with ISO/IEC 27001.

2. Secure development
Secure development is a systematic approach to integrate cyber security into the product and solution development lifecycle. It is part of the complete process chain, from cyber security requirements to cyber security validation. It also covers the securing of the IT infrastructure that is needed for the development organization.

3. Secure integration and service
Cyber security is an integral part of Siemens' processes to deliver solutions to the customer, who receives solutions with design, integration and commissioning executed according to cyber security best practices, ensuring optimal support for secure operations.

4. Vulnerability and incident handling
Vulnerability and incident handling is the process defining how an organization reacts to and handles security vulnerabilities and incidents, including the related internal and external communication. The process also interfaces as required with the regular vulnerability monitoring and patch development process of the product or solution development.

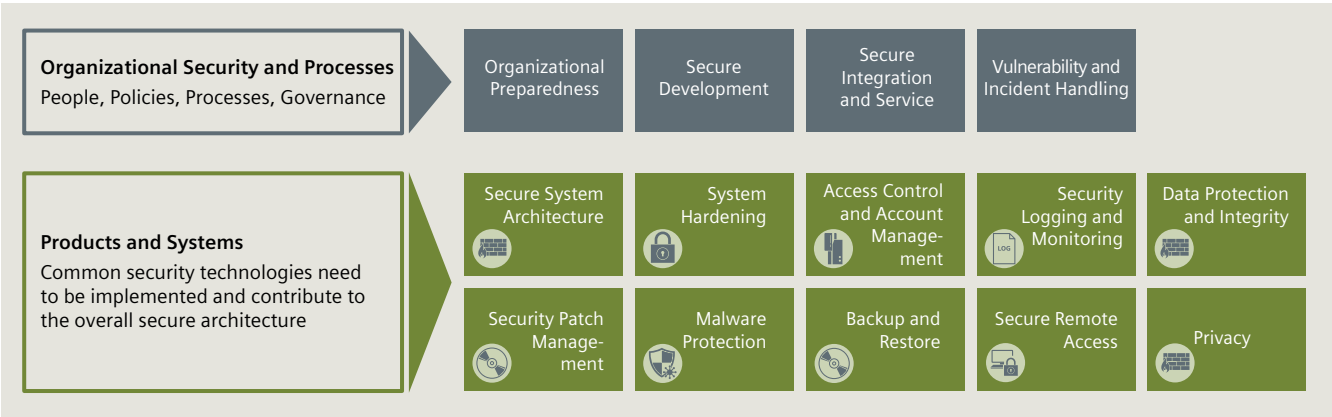

Fig. 2.7-2: Siemens categories of cyber security measures

Siemens has its own in-house Computer Emergency Response Team (CERT). The Siemens ProductCERT team is mandated with monitoring and analyzing security issues and publishes product related advisories on vulnerabilities and associated mitigation recommendations in conjunction with the respective Siemens organizational units. Additionally, with its recognized expertise in penetration testing Siemens ProductCERT checks Siemens products and third-party components used within the Siemens portfolio for weak points by means of selective hacker attacks, resulting in recommendations on implementation guidances to the respective Siemens organizational units.

5. Secure system architecture

A cyber security architecture must not only support the regulatory requirements, but should provide security by design, too. Protecting the power system requires a defence-in-depth approach, addressing cyber risks and supporting secure operations through people, processes and technologies.

Fig. 2.7-3 outlines a typical network architecture. The basis is a clear segmentation of the network into manageable zones equipped with appropriate cyber security measures in order to enable a secure and cost-efficient operation.

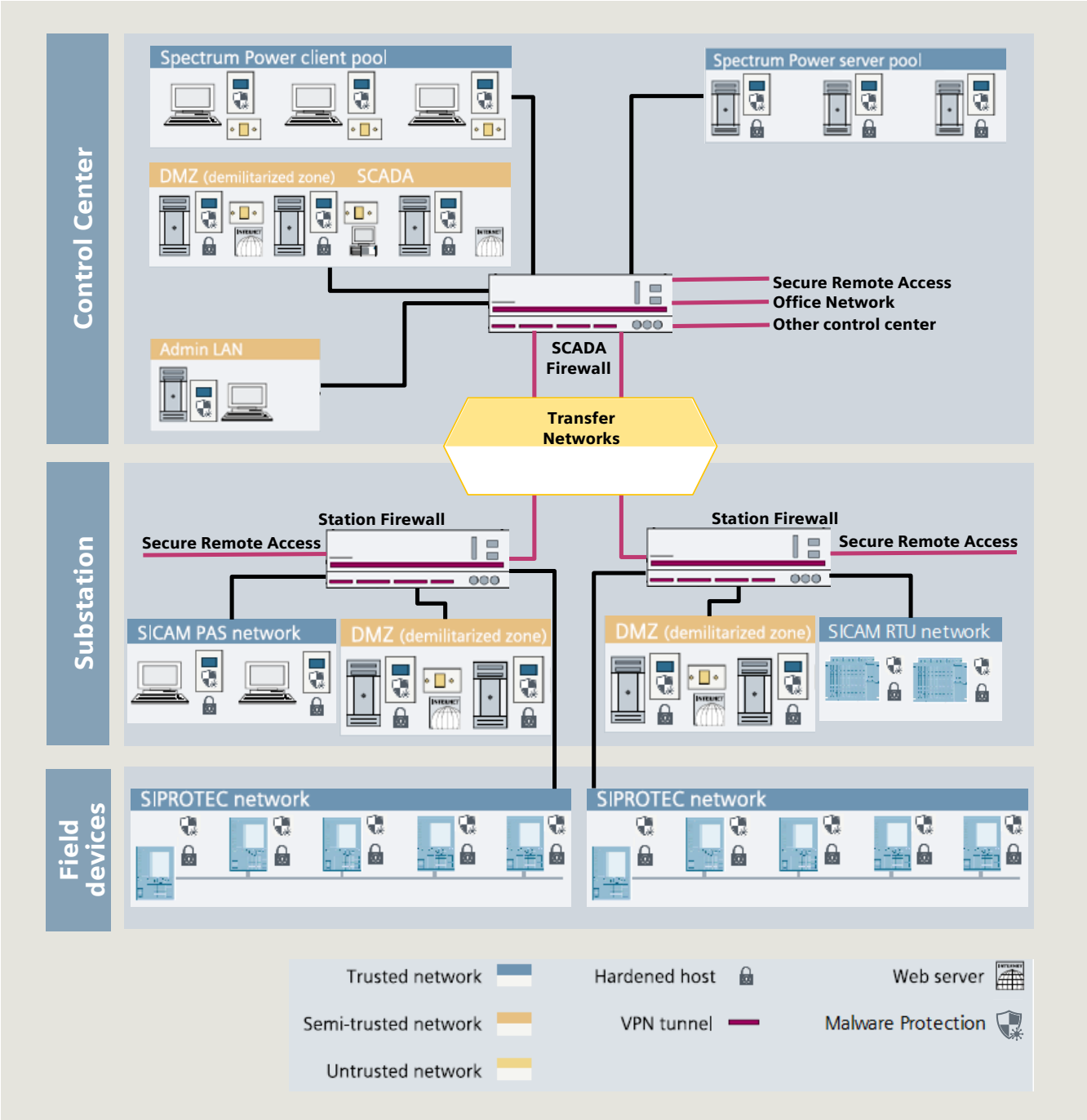

Fig. 2.7-3: Cyber security architecture

The architecture is the most visible part of a comprehensive cyber security approach. It forms the basis for applying further measures in people, processes and products as defined covering this cyber security framework.

6. System hardening

Hardening reduces the attack surface of the products and solutions by means of secure configuration. This is reached, e.g., by removal of unnecessary software, unnecessary usernames or logins, disabling of unused ports, or OS hardening. Siemens provides guidelines for products and systems on hardening and can support operators in hardening of their infrastructure.

7. Access control and account management

Access control is the selective restriction of access to products, solutions, or infrastructure, by authenticating users (and systems) and authorizing them by granting appropriate permissions. Account management is the definition of different user accounts with suitable privileges that is best performed in a centralized way with unified security policies. Siemens can support system operators in design and implementation of an access control and account management system. Power system operators can integrate Siemens energy management products seamlessly into their central user management solutions alongside products from other vendors.

8. Security logging / monitoring

Security logging / monitoring means to capture and monitor all security related activities performed across the system, including user account activities such as login/logout, or failed login attempts. Alarms are reported for further follow-up accordingly. Siemens products and solutions support centralized logging of security events and alarms by means of the syslog messaging standard, thereby providing the basis for sophisticated Security Information and Event Management (SIEM) solutions.

9. Security patching

Security patch management includes vulnerability monitoring for all software components (own and third-party) used in a product or solution, classification of the vulnerabilities and available patches, security patch compatibility tests and, if needed, the development of additional security patches to address incompatibilities. For a solution, this includes the delivery and maintenance of a system with up-to-date security patch level installed. Siemens offers comprehensive patch management services to energy automation operators.

10. Malware protection

Protection of a product or solution against malware is ensured through the support of appropriate malware protection solutions (e.g., classical antivirus, application whitelisting, or software signing) and appropriate procedures to ensure that all systems are protected against latest malware. Siemens has malware protection available for key components used in the energy automation, offers technical solutions for malware protection and supports customer to establish a secure update process for antivirus patterns.

11. Backup and restore

Backup is the process of copying and archiving of software, configuration data, and operational data, such that a product or solution can be restored, e.g., after a data loss event. This includes appropriate measures and procedures for disaster recovery. Siemens has backup and restore concepts available, and supports system operators to assess and establish respective process.

12. Secure remote access

Secure remote access in context of substation automation systems is the encrypted, authenticated and authorized access to substation assets from remote sites through potentially untrusted networks. Siemens offers a certified secure remote access solution optimized to the needs of power system operators.

13. Data protection and integrity

Data protection ensures the protection of all sensitive data across the system both in rest and in transit. Such data must be accessible only to authorized persons or processes. In addition, also the integrity of data and communication across the system, and the availability of the data needs to be ensured through appropriate methods. Siemens components support the required functionality to meet data protection and integrity needs, while processes implemented within Siemens ensure that customer data are managed with due care at all phases of customer projects.

14. Privacy

This ensures the users' ability to control when, how, and to what extent information about themselves will be collected, used, and shared with others. Information privacy is a particularly sensitive matter where personally identifiable information is collected, e.g. such as in Smart Metering application. The Siemens portfolio helps operators to comply with the associated regulatory requirements.

1
2
3
4
5
6
7
8
9
10
11
12
?

2.7.3 Operational security

In operational security, the interplay of the '3 P's' becomes obvious: products and systems, people and organizations need to work together according to the defined processes. In operational security, key functionalities include measures such as security patch management, access control and account management, security logging and monitoring, and malware protection. These measures are necessary to establish a protective and detective environment, where accountability and traceability of all actions involved in operation of an energy grid become relevant and support the possibility to take corrective control within the operational environment. Siemens has the target to support operational security by relying on international standards.

1. Vulnerability and incident handling

Handling vulnerabilities and incidents is one of the mandatory requirements to protect the energy network.

Vulnerability handling includes the definition of counter-measures, if required, and the communication towards the operator in order to inform appropriately about critical vulnerabilities, work-arounds, and available patches, see fig. 2.7-4.

On the other hand, power system operators need to be able to analyze provided security advisories, and to define and apply counter-measures effectively.

Just as vulnerability handling supports to protect the business, incident handling addresses the needs to respond to, and recover from, cyber incidents in an effective manner. The security measures needed for incident handling are the same as for vulnerability handling, but require additional measures in organizational preparedness to be covered, particular in the area of process handling.

2. Security patch management

One of the most crucial activities in cyber security is patch management. Due to the increased interconnectivity, the threat that attackers utilize known vulnerabilities has increased tremendously.

Standards such ISO / IEC 27002 and IEC 62443-2-3 give guidance to operators about how to implement adequate measures for a patch management process. A summary of the recommended process steps for operators are:

- Taking a complete asset inventory
- Checking available patches
- Checking compatibility
- Testing in an environment that reflects the production environment
- Scheduling the patch installation
- Installing patches or mitigation measures
- Updating the asset database.

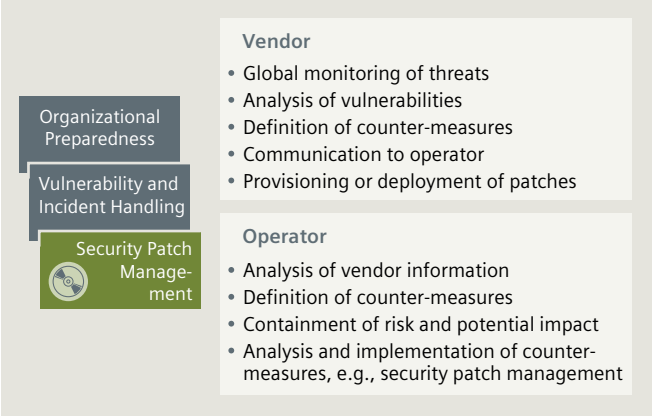

Fig. 2.7-4: Tasks and security measures needed in vulnerability handling

Equally, defined requirements for system vendor on patch management are defined in standards such as IEC 62443-2-3 and IEC 62443-2-4:

- Providing documentation concerning patch management policies for components and systems
- Verification of patches concerning compatibility and applicability for own and third-party components
- Providing the patch information and patches to the operator
- Providing lifecycle information for products and systems including end-of-life information.

Siemens meets these requirements with a comprehensive patch management process for products and systems. This includes a regular patch test for own and third-party components, and the provision of the test results to customers. Hereby, Siemens in-house CERT is used for a comprehensive vulnerability scanning and communication of vulnerabilities and advisories for all Siemens products, see section 2.7.2 item 4. Additionally, as a prerequisite for a patch management process, Siemens provides 'back-up and restore' documentation on product and system level.

1
2
3
4
5
6
7
8
9
10
11
12
?

A simplified process is shown in fig. 2.7-5, with the initial activities and the cyclic activities of a complete patch management process from the operator's point of view.

The initial activities includes the migration to a secure system (step 0 in fig. 2.7-5), the definition of the assets to be taken into scope, and prepare the asset data as required in order to be able to perform patch management (steps 1 and 2).

The recurring activities start with the collection of patch information based on the asset inventory (step 3) and a decision, what, whether and when patches have to be installed (step 4); the patch validation (step 5) and the patch installation (step 6) follows accordingly. Finally, the asset data needs to be updated (step 7).

Siemens offers comprehensive patch management services for products and systems to meet the regulatory requirements derived from ISO/IEC 27001 based on all process steps.

3. User management and access control

The basic principle of access control is shown in fig. 2.7-6. Access control ensures that users (and systems) can only interact with resources as intended. This is only possible if the user is authenticated, i.e., if it is verified that the user is who he claims to be, and also authorized, i.e. it is verified that the user is permitted to perform the operation he intends to perform with/on the resources. Identity management is the trust base in this pyramid, as it manages the users and credentials to be controlled. For completeness, access control does not only consider the users, but also any resources such as devices or applications.

Access control is relevant in all lifecycle phases (from commissioning, operation and renovation to decommissioning) of systems and networks. The most crucial phase for cyber security is during the daily operations. Typical access control scenarios include physical access, HMI access, IED access, remote access, etc. Additionally, due to safety reasons, emergency access routes are defined in order to bypass the regular access control mechanism.

There are several options to realize access control in the power grid with different levels of depth and security. A typical for a centralized approach is the usage of LDAP or RADIUS servers in order to manage identities. Authentication and authorization can be established by means of password verification or by using a public key infrastructure (PKI) based handling of X.509 certificates. The access rights are defined by the system or device, as these are specific to those devices based on the operational function provided.

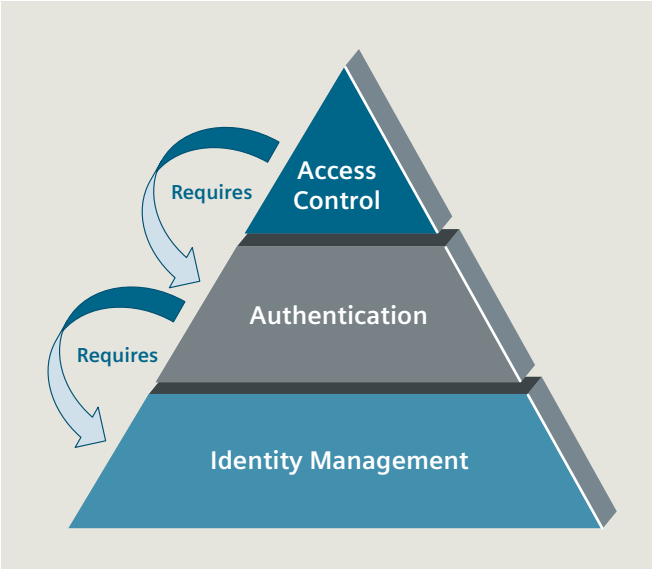

Fig. 2.7-6: Identity and access management – the basic principle

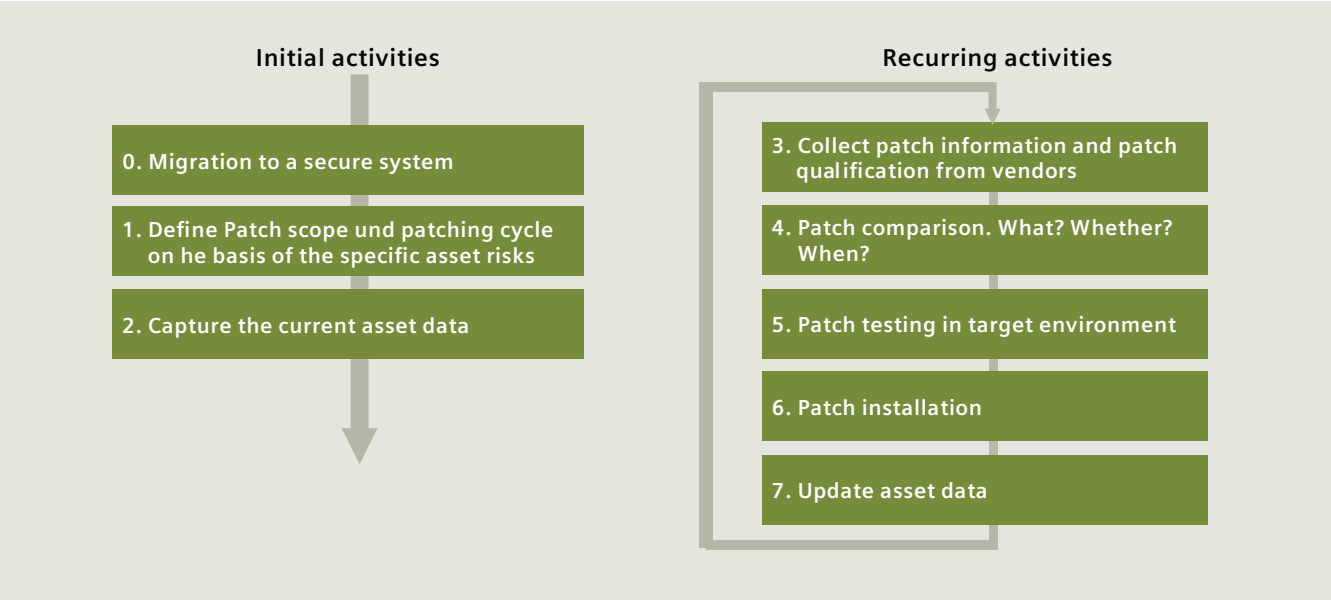

Fig. 2.7-5: Simplified patch management process

1
2
3
4
5
6
7
8
9
10
11
12
?

Fig. 2.7-7 shows a role based access control (RBAC) example. A user is requesting access to an IED via a device management tool (1). The IED is sending this request to an Active Directory (AD) domain controller for authentication of the user (2). AD replies with the result of the authentication. If the user has been successfully authenticated by the IED, it retrieves the role information of the user by AD, which indicates the authorization level of the user (3). The IED then initiates the role-based user session (4).

Due to the multi-vendor environment of power grids, a standardized approach based on IEC 62351 is most crucial for an effective access control implementation in order to support interoperability.

It is important to consider transitionary technologies and tools that address the restrictions of the generation-old secondary equipment that will continue to represent the majority installed base along the years to come. Centralized access management solutions like the Siemens CrossBow can close the gap by managing the users and rights for both, old- and newer generation secondary equipment.

4. Centralized logging

In order to get visibility of activities and events in the power grid, monitoring is essential. A basic functionality of monitoring is the centralized logging. Centralized logging means to collect information about events and activities in the energy grid on a central spot for further analysis. The base of centralized logging is the syslog functionality.

Centralized logging is defined in standards such as RFC 5424/5/6 (syslog), and the applications thereof in the energy-sector-covering standards such as IEEE 1686 and IEC 62351. Furthermore, guidelines like BDEW whitepaper or NERC CIP give guidance on what needs to be monitored.

Siemens supports centralized logging and offers system operators centralized logging solutions.

5. Malware protection

Malware protection emphasizes measures and concepts implemented in order to protect systems against malware iinfection, which is required for all system components. In other words, systems used in process networks and control systems shall feature protection concepts against malware infection. The potential sources of malware infection could be infected portable media ((e.g., USB flash drive, CD, etc), network shares or infected PCs (e.g., service PC).

Different technical solutions against malware are possible. Classical antivirus and application whitelisting for PC-based systems, and software signing for embedded devices. Antivirus patterns shall be regularly updated without using a direct connection to update-servers located in external networks, e.g., Internet. Possible approaches are realized with an internal update server or with a documented secure manual process (e.g., through external secure devices). In order to ensure compatibility with new anti-virus patterns, Siemens regularly tests the compatibility of new antivirus patterns against the Siemens application.

In this context, Siemens provides technical solutions for malware protection and supports customer to establish a secure update process for antivirus patterns.

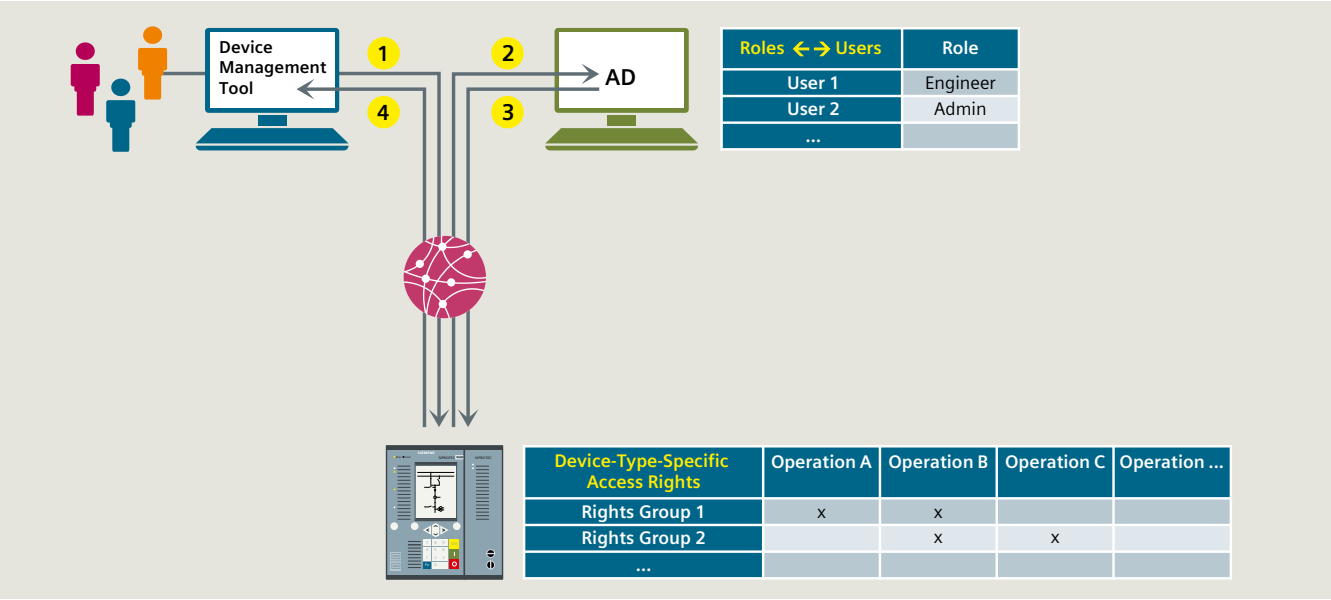

Fig. 2.7-7: Example for role-based access control

1
2
3
4
5
6
7
8
9
10
11
12
?

2.7.4 Applied cyber security

An effective cyber security requires addressing cyber security on various levels. This section will provide best-practice examples in which the methodology and security measures described above have been applied in order to protect products and systems.

The implementation of cyber security requires to consider the requirements as defined in the cyber security framework (section 2.7.2), and to support operational cyber security requirements (section 2.7.3).

1. Product security

Siemens has taken a holistic approach for the energy automation portfolio including processes, communication, employees and technologies. First, cyber security is established in the organization by defined roles, rules and processes; a governance structure has been implemented according to ISO/IEC 27001. Second, secure product development is part of the product lifecycle management that satisfies the stringent demands on cyber security and incorporates a secure product architecture.

Product development includes the secure design starting with security requirements, the implementation of software, and the execution of systematic cyber security tests. Cyber security of Siemens' own infrastructure also plays a major role. Internal design documentation and the source code have to be protected against unauthorized access and tampering in order to secure the integrity needs.

Security-enabled energy automation products are the foundation of a secure energy automation system. Cyber security requirements for the products depend on various factors, including the intended function (protection, control, operation or monitoring) and the spatial layout of the products. Security functions in modern energy automation products follow the general goals of cyber security: availability, integrity and confidentiality, and meet the industry specific standards. State-of-the-art protection devices are capable of satisfying these needs, see fig. 2.7-8. Secure communication between the engineering software and the device is crucial for secure operation. The encrypted connection is only established after mutual authentication. A connection password is used and managed in this process that complies with the BDEW whitepaper and NERC CIP recommendations. All security-relevant events are logged in a non-erasable security log. The protection device is equipped with a crypto chip that assures the cryptographic functions, including an integrity check of the device firmware in a protected environment.

For more information on vulnerabilities and updates of products and solutions:

Siemens Internet:

siemens.com/cert/advisories

ICS-CERT:

https://ics-cert.us-cert.gov/advisories

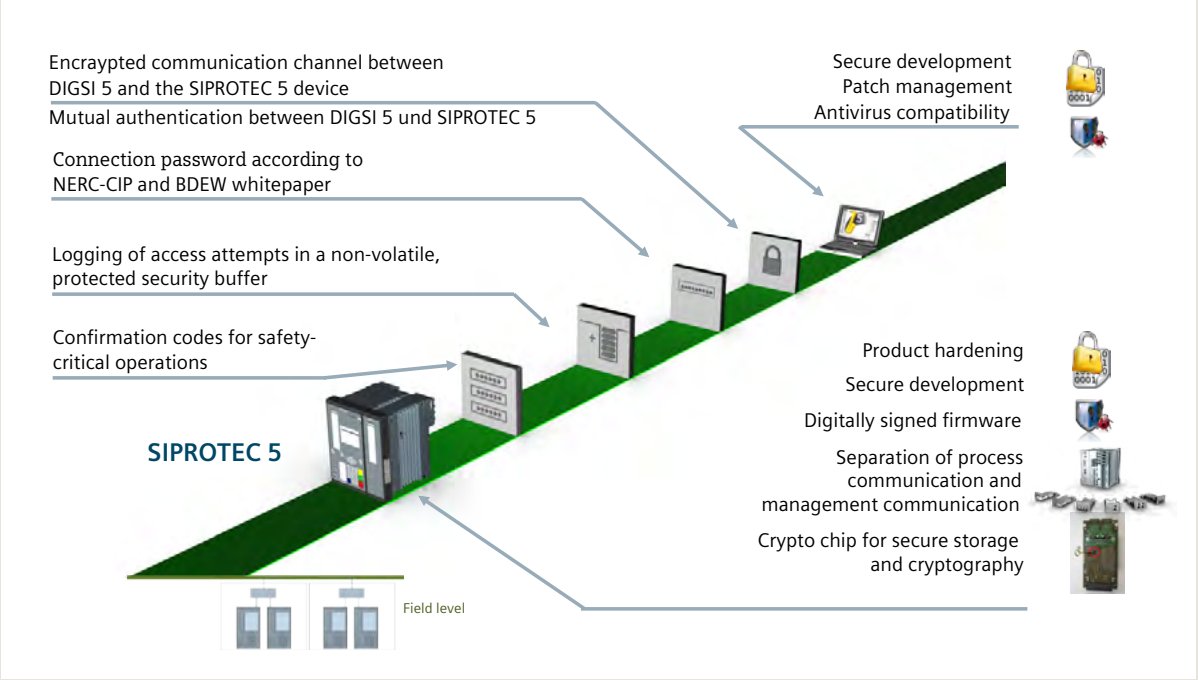

Fig. 2.7-8: Security features of a state-of-the-art protection device

During software production, the firmware is provided with a digital signature which the device can authenticate in order to ascertain that the firmware has not been tampered on its transit from the production facilities to the device itself. Furthermore, the device enables a physical separation of process and management communication. Devices communicating outside of a physically protected zone have to satisfy higher communication security requirements than devices communicating within a physically protected area.

For distribution automation scenarios, where it is not always possible to establish adequate physical security measures to protect automation equipment from process communication manipulation, Siemens RTU products support end-to-site encryption of the process communication to the control centers, see fig. 2.7-9.

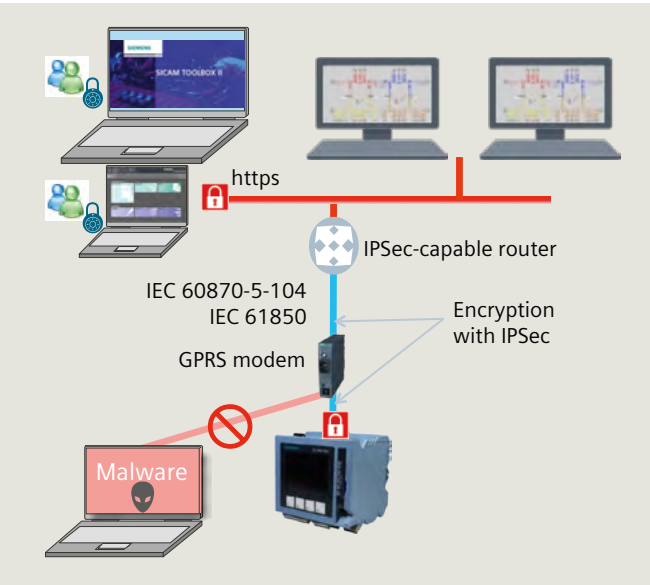

Fig. 2.7-9: Example for a secure telecommunication

Siemens test security patches and virus patterns on reference system in order to verify that regular installations of operating system do not affect the availability of energy automation functions.

2. System security – digital substation example

As a system integrator, Siemens is responsible for integrating products in a secure way. This task, too, requires dedicated process descriptions, guidelines, and technical descriptions to ensure secure integration. The system configuration is subsequently carried out according to the technical descriptions. Security measures are validated during the Factory Acceptance Test (FAT) and Site Acceptance Test (SAT) based on defined test cases.

For substation automation systems, the realization of security functions is subject to a number of constraints like the requirement of availability, expected 24/7 operation without interruption. A substation is typically a mixture of PC-based and embedded systems from various vendors with life spans of up to 40 years. Hence, an energy automation system is frequently made up of various components from different vendors, different technologies, and different technological generations. Many of the established office IT measures prioritize protection goals differently, or inadequately account for the special boundary conditions. This calls for the implementation of strategies tailored to the needs of energy automation.

In fig. 2.7-10, the security measures applied to a digital substation are shown. All cyber security measures basically follow at least the security design principles “Defense in depth principle”, “Least privilege principle”, and “Network Segmentation”.

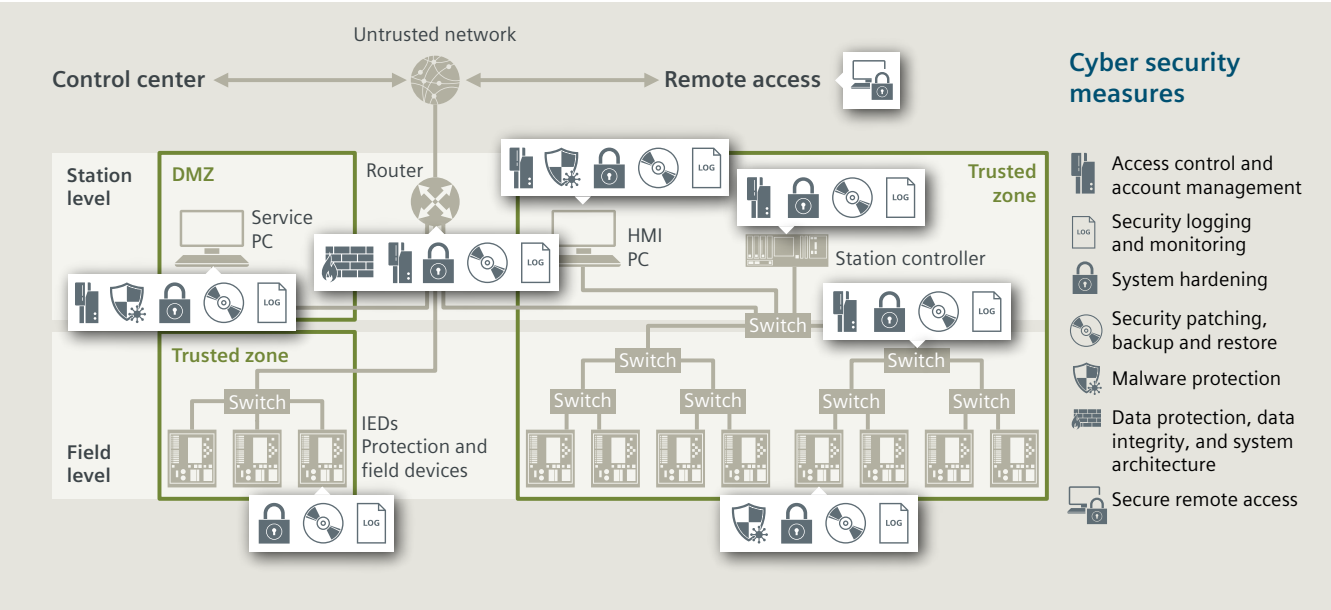

Fig. 2.7-10: Digital substation

Network segmentation is a powerful protection mechanism. The fundamental idea is to group network elements with sensitive communication needs and similar level of protection into the same subnet. Firewalls filter inbound and outbound traffic. These zones also called "trusted zones". It is not allowed to bypass the firewalls. The trusted zone is not accessible from outside, from untrusted networks. To get access to the trusted zone from outside, Siemens uses a "buffer" zone, the Demilitarized Zone (DMZ). With this approach, the security requirements for "trusted zone" internal communication can be often reduced to a feasible level for typical industrial components, compared to a larger network that does not rely on security zones.

The principle of least privilege is the practice of limiting access to the minimal level that will allow desired functionality. Applied to human users, the principle of least privilege means that the user has the lowest level of user rights to be able to execute the desired tasks. The principle is also applied to all other "members" of a system like devices, software applications, services, and processes. The principle is designed to limit the potential damage of any security breach, whether intended or unintended.

Defense in depth is the coordinated use of multiple security controls to protect a system. The goal is to provide redundancy in case one security control fails or vulnerability in one security control is exploited. Components of defense in depth include, for example, the security controls such as firewalls, account management, malware protection, and secure hardening.

All security measures are implemented under considerations of the general limitations of substation automation systems and the security design guidelines. The cyber security measures are (cf. fig. 2.7-2 and section 2.7.2 on security categories):

- Access control and account management
- Security logging and monitoring
- System hardening
- Security patching, backup and restore
- Malware protection
- Data protection, data integrity, and system architecture
- Secure remote access.

Looking into malware protection as one cyber security measure example, the implementation offers different options (see also section 2.7.3 part 5).

Blacklisting / antivirus
Classical antivirus solutions that compare the content of the PC file system with patterns of known viruses. In case of a positive match, the antivirus software alerts the user.

Application whitelisting
An application whitelisting solution works according to a whitelisting mechanism. This is a protection mechanism that allows only trusted programs and applications to run on a system. After installation of the system software and applications, additional whitelisting software is installed on the virus-free system. After installation is complete, a whitelist of programs, applications and services will be generated by the whitelisting solution. All applications/programs/services on the list will be signed or secured by a checksum. This ensures that only approved software will be executed. Downloaded software or viruses that might potentially have infected the system after activation of the whitelisting protection will be prevented from executing.

All Windows-based PC systems are equipped with appropriate malware protection. The advantage of the application whitelisting is that it is not necessary to install regular pattern updates for newly developed malware immediately.

The decision on which solution fits best to the system operator's requirements and operational management has to be taken on a project- or system-specific basis.

Siemens offers comprehensive services and technology to support operators in defining protection concepts for digital substation and migration towards a modern architecture and defense-in-depth approach.

2.7.5 Cyber security consultancy

Cyber security in the energy sector is a broad topic where a lot of domain-specific knowledge and expertise is required in order to define appropriate measures. Siemens supports operators regarding the verification, definition and implementation of cyber security in systems, services and processes.

Siemens' cyber security consulting approach is based on the well-proven Smart Grid Compass® model, which has been developed by leading experts at Siemens and has since then been used to successfully transform a wide variety of system operators worldwide into an 'utility of the future'.

As shown in fig. 2.7-11, cyber security consultancy offered by Siemens is structured into 4 phases:

- **Orientation:** Comprehensive and objective analysis of the current cyber security status in the technology, process and organizational environments.
- **Destination:** Definition of the aspired security levels also with regard to the relevant regulatory requirements and standards, and derivation of concrete security measures
- **Routing:** Development of holistic cyber security. implementation roadmap based on derived measures, and including recommendations for implementation.
- **Navigation:** Continuous customer support during the implementation of security measures.

Systems with a high degree of protection against cyber security attacks are feasible when cyber security methods and functionality are implemented consequently. Siemens can support power system operators during assessment, definition and implementation of cyber security.

Siemens recommends and provides consultation while carrying out a risk assessment of an organization or infrastructure in order to obtain a comprehensive sight into existing risks, derive appropriate measures, and thus mitigate the risks identified.

2.7.6 Final remarks

An effective cyber security requires addressing cyber security holistically. Cyber security requires a continues effort to protect against existing and upcoming threats and risks. This is valid concerning processes, technologies and people such as ongoing competence management to keep the knowledge up-to-date, process improvements following international standards like ISO/IEC 27001 and maintenance for the technology to keep the security level up-to-date. This is valid for all stakeholders in the energy value chain, the operators, the vendors, system integrators and consultants.

Therefore, Siemens is addressing cyber security systematically in the complete lifecycle of his products & solutions based on international standards. Furthermore, Siemens has the policy to work according ISO/IEC 27001.

With our portfolio and services, and together with the Siemens CERT, Siemens is uniquely positioned as a strong and trusted partner for his customer.

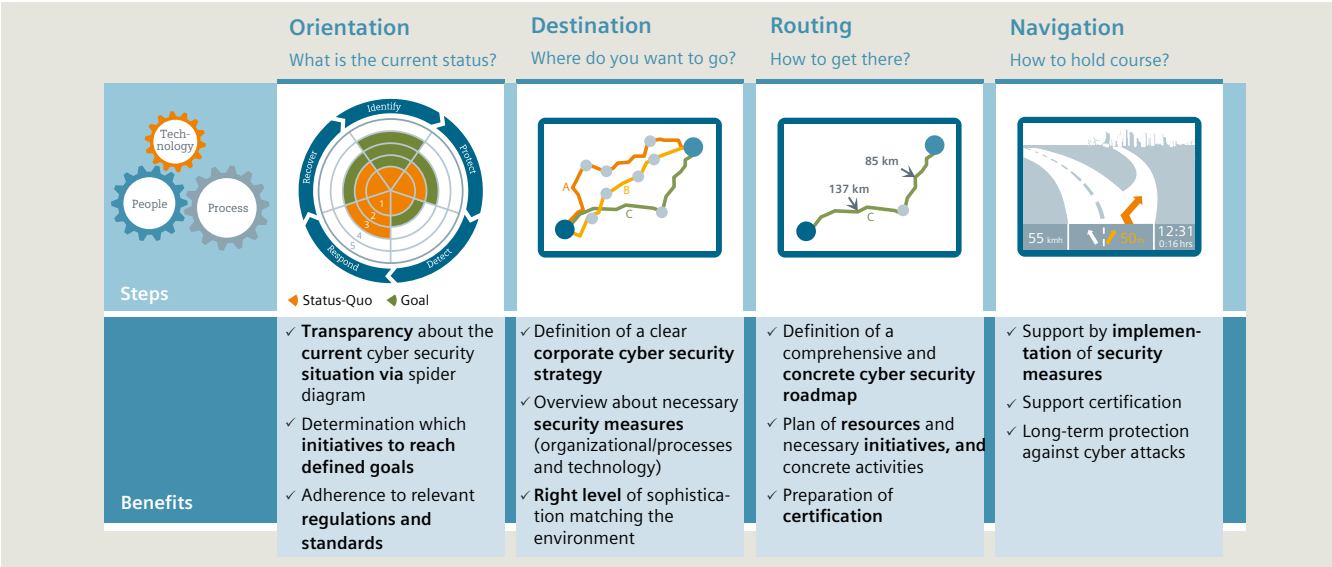

Fig. 2.7-11: Cyber security consultancy phases

3 Substations and switchgear

3.1	**High-voltage substations and switchgear**	**94**
3.1.1	Turnkey substations	94
3.1.2	High-voltage switchgear – overview	95
3.1.3	Circuit configuration	96
3.1.4	Air-insulated substations	99
3.1.5	Mixed technology (Compact / hybrid solutions)	107
3.1.6	Gas-insulated switchgear for substations	111
3.2	**Medium-voltage substations and switchgear**	**122**
3.2.1	Introduction	122
3.2.2	Basics of switching devices	123
3.2.3	Requirements of medium-voltage switchgear	127
3.2.4	Medium-voltage switchgear	129
3.2.5	High-current and generator switchgear	144
3.2.6	Industrial load center substation	147
3.3	**Low-voltage systems**	**151**
3.3.1	Requirements for electrical power systems in buildings	151
3.3.2	Dimensioning of power distribution systems	154
3.3.3	Low-voltage switchboards	157
3.3.4	Planning notes for low-voltage switchboards	160
3.3.5	Low-voltage switchboard – cubicle types and examples	164
3.3.6	Subdistribution systems	165
3.3.7	Busbar trunking systems	166
3.3.8	Benefits and data of the busbar trunking systems	169

3.1 High-voltage substations and switchgear

3.1.1 Turnkey substations

High-voltage substations are interconnection points within the power transmission and distribution grids between regions and countries. Different applications of substations lead to high-voltage substations with and without power transformers:

- Step up from a generator-voltage level to a high-voltage system (MV/HV)
  - Power plants (in load centers)
  - Renewable power plants (e.g., windfarms)
- Transform voltage levels within the high-voltage grid (HV/HV)
- Step down to a medium-voltage level of a distribution system (HV/MV)
- Interconnection in the same voltage level.

Scope

High-voltage substations comprise not only the high-voltage equipment which is relevant for the functionality in the power grid. Siemens plans and constructs high-voltage substations comprising high-voltage switchgear, medium-voltage switchgear, major components such as high-voltage equipment and transformers, as well as all ancillary equipment such as auxiliaries, control systems, protective equipment and so on, on a turnkey basis or even as general contractor. The installations supplied worldwide range from basic substations with a single busbar to interconnection substations with multiple busbars, or a breaker-and-a-half arrangement for rated voltages up to 800 kV, rated currents up to 8,000 A and short-circuit currents up to 100 kA. The services offered range from system planning to commissioning and after-sales service, including training of customer personnel.

Project management

The process of handling such a turnkey installation starts with preparation of a quotation, and proceeds through clarification of the order, design, manufacture, supply and cost-accounting until the project is finally billed. Processing such an order hinges on methodical data processing that in turn contributes to systematic project handling.

Engineering

All these high-voltage installations have in common their high standard of engineering which covers all system aspects such as power systems, steel structures, civil engineering, fire precautions, environmental protection and control systems (fig. 3.1-1). Every aspect of technology and each work stage is handled by experienced engineers. With the aid of high-performance computer programs, e.g., the finite element method (FEM), installations can be reliably designed even for extreme stresses, such as those encountered in earthquake zones.

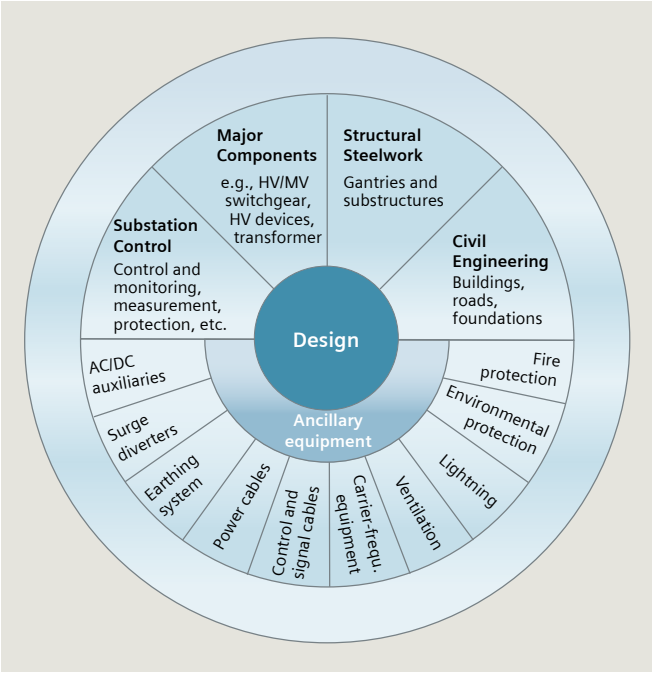

Fig. 3.1-1: Engineering of high-voltage switchgear

All planning documentation is produced on modern CAD / CAE systems; data exchange with other CAD systems is possible via interfaces. By virtue of their active involvement in national and international associations and standardization bodies, the Siemens engineers are always fully informed of the state of the art, even before a new standard or specification is published.

Certification of the integrated quality management system

At the beginning of the 1980s, a documented QM system was already introduced. The basis of the management system is the documentation of all processes relevant for quality, occupational safety and environmental protection.

The environment protection was implemented on the basis of the existing QM system and was certified in accordance with DIN ISO 14001 in 1996. Occupational safety and health have always played an important role for Siemens AG and for the respective Business Units. When the BS OHSAS 18001 standard was introduced, the conditions for a certification analogous to the existing management systems were created.

Know-how, experience and worldwide presence

A worldwide network of liaisons and sales offices, along with the specialist departments in Germany, support and advise system operators in all matters of high-voltage substations technology.

1
2
3
4
5
6
7
8
9
10
11
12
?

3.1.2 High-voltage switchgear – overview

High-voltage substations comprising high-voltage switchgear and devices with different insulating systems: air or gas (SF_6). When planning high-voltage substations, some basic questions have to be answered to define the type of high-voltage switchgear:

What is the function and location within the power grid?
What are the climatic and environmental conditions?
Are there specific requirements regarding locations?
Are there space/cost restrictions?

Depending on the answers, either AIS or GIS can be the right choice, or even a compact or hybrid solution.

Air-insulated switchgear (AIS)

AIS are favorably priced high-voltage substations for rated voltages up to 800 kV, which are popular wherever space restrictions and environmental circumstances are not severe. The individual electrical and mechanical components of an AIS installation are assembled on site. Air-insulated outdoor substations of open design are not completely safe to touch, and are directly exposed to the effects of the climate and the environment (fig. 3.1-2).

Gas-insulated switchgear (GIS)

The compact design and small dimensions of GIS make it possible to install substations of up to 550 kV right in the middle of load centers of urban or industrial areas. Each switchgear bay is factory-assembled and includes the full complement of disconnecting switches, earthing switches (regular or make-proof), instrument transformers, control and protection equipment, and interlocking and monitoring facilities commonly used for this type of installation. The earthed metal enclosures of GIS assure not only insensitivity to contamination but also safety from electric shock (fig. 3.1-3).

Mixed technology (compact/hybrid solutions)

Beside the two basic (conventional) designs, there are also compact solutions available that can be realized with air-insulated and/or gas-insulated components.

Fig. 3.1-2: Air-insulated outdoor switchgear

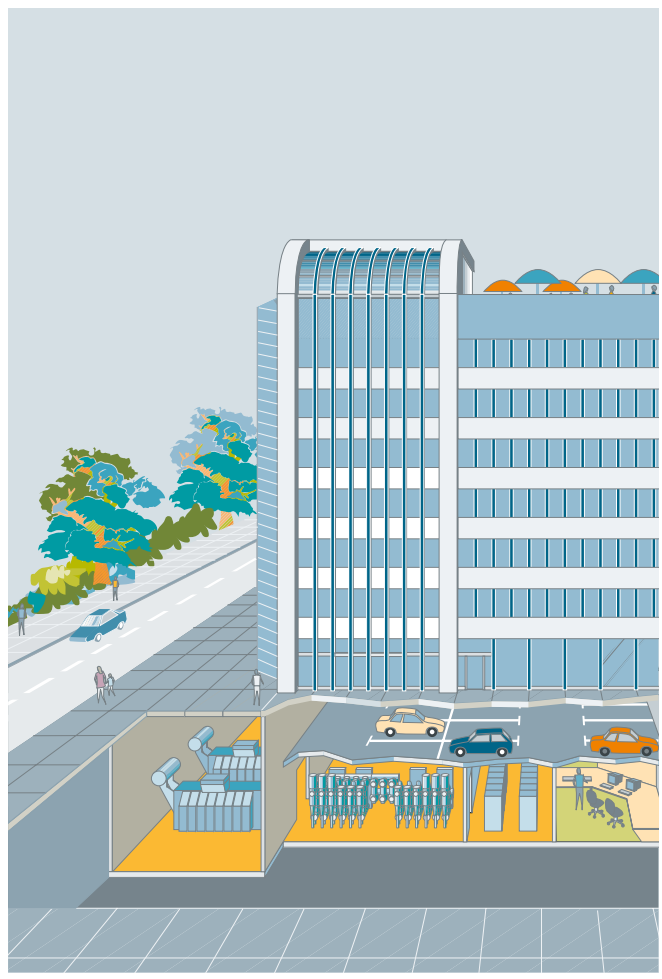

Fig. 3.1-3: GIS substations in metropolitan areas

3.1.3 Circuit configuration

High-voltage substations are points in the power grid where power can be pooled from generating sources, distributed and transformed, and delivered to the load points. Substations are interconnected with each other, so that the power grid becomes a meshed network. This increases reliability of the power supply system by providing alternate paths for flow of power to take care of any contingency, so that power delivery to the loads is maintained and the generators do not face any outage. The high-voltage substation is a critical component in the power grid, and the reliability of the power grid depends upon the substation. Therefore, the circuit configuration of the high-voltage substation has to be selected carefully.

Busbars are the part of the substation where all the power is concentrated from the incoming feeders, and distributed to the outgoing feeders. That means that the reliability of any high-voltage substation depends on the reliability of the busbars present in the power grid. An outage of any busbar can have dramatic effects on the power grid. An outage of a busbar leads to the outage of the transmission lines connected to it. As a result, the power flow shifts to the surviving healthy lines that are now carrying more power than they are capable of. This leads to tripping of these lines, and the cascading effect goes on until there is a blackout or similar situation. The importance of busbar reliability should be kept in mind when taking a look at the different busbar systems that are prevalent.

Single-busbar scheme (1 BB)

The applications of this simple scheme are distribution and transformer substations, and feeding industrial areas (fig. 3.1-4). Because it has only one busbar and the minimum amount of equipment, this scheme is a low-cost solution that provides only limited availability. In the event of a busbar failure and during maintenance periods, there will be an outage of the complete substation. To increase the reliability, a second busbar has to be added.

Double-busbar scheme (2 BB)

The more complex scheme of a double-busbar system gives much more flexibility and reliability during operation of the substation (fig. 3.1-5). For this reason, this scheme is used for distribution and transformer substations at the nodes of the power grid. It is possible to control the power flow by using the busbars independently, and by switching a feeder from one busbar to the other. Because the busbar disconnectors are not able to break the rated current of the feeder, there will be a short disruption in power flow.

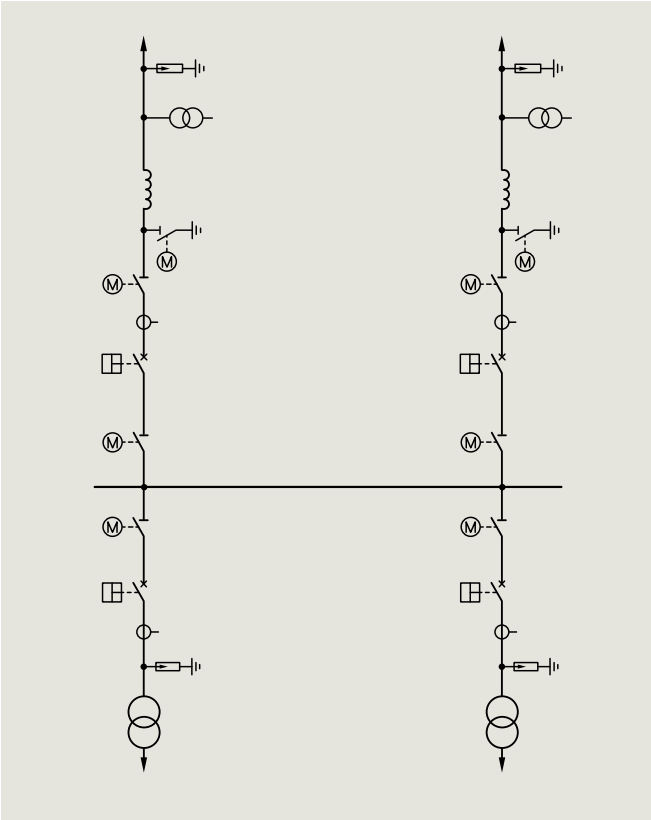

Fig. 3.1-4: Special single busbar, H-scheme (1 BB)

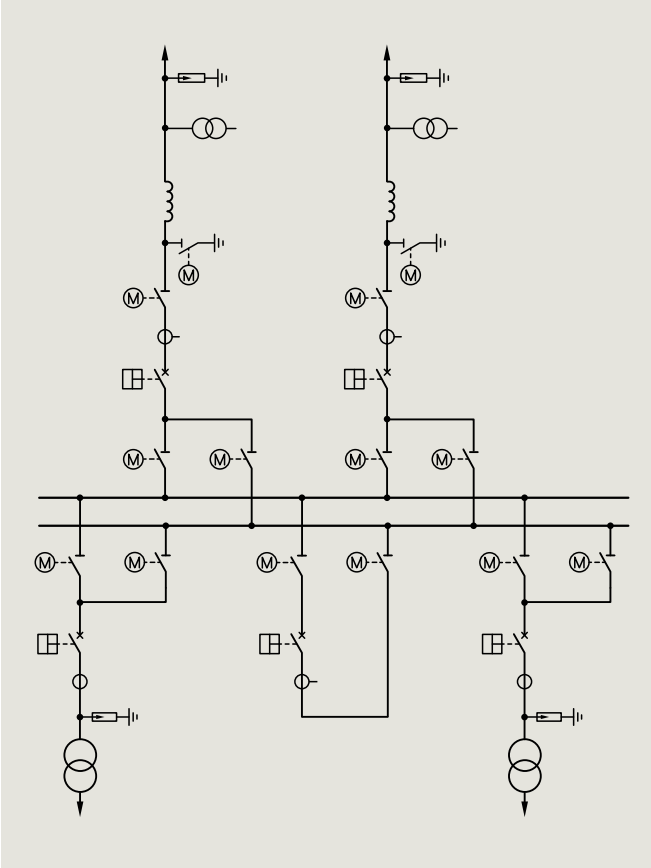

Fig. 3.1-5: Double-busbar scheme (2 BB)

Double circuit-breaker scheme (2 CB)

To have a load change without disruption, a second circuit-breaker per feeder has to be used. This is the most expensive way to solve this problem. In very important feeders, the 2 CB solution will be used (fig. 3.1-6).

One-breaker-and-a-half scheme (1.5 CB)

The one-breaker-and-a-half is a compromise between the 2 BB and the 2 CB scheme. This scheme improves the reliability and flexibility because, even in case of loss of a complete busbar, there is no disruption in the power supply of the feeders (fig. 3.1-7).

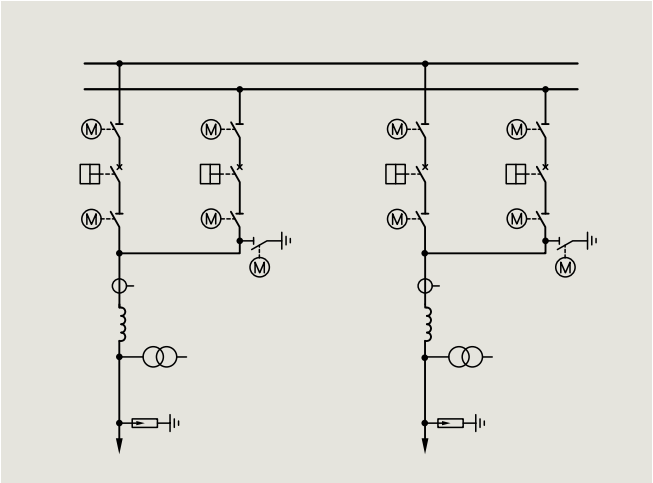

Fig. 3.1-6: Double circuit-breaker scheme (2 CB)

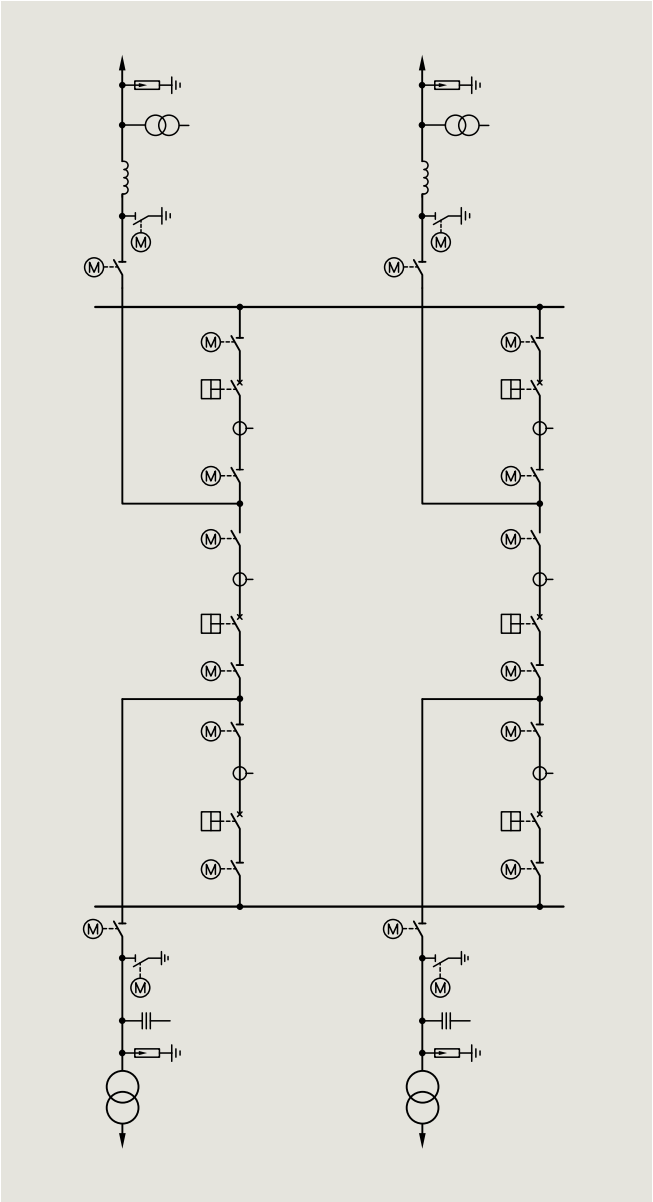

Fig. 3.1-7: One-breaker-and-a-half scheme (1.5 CB)

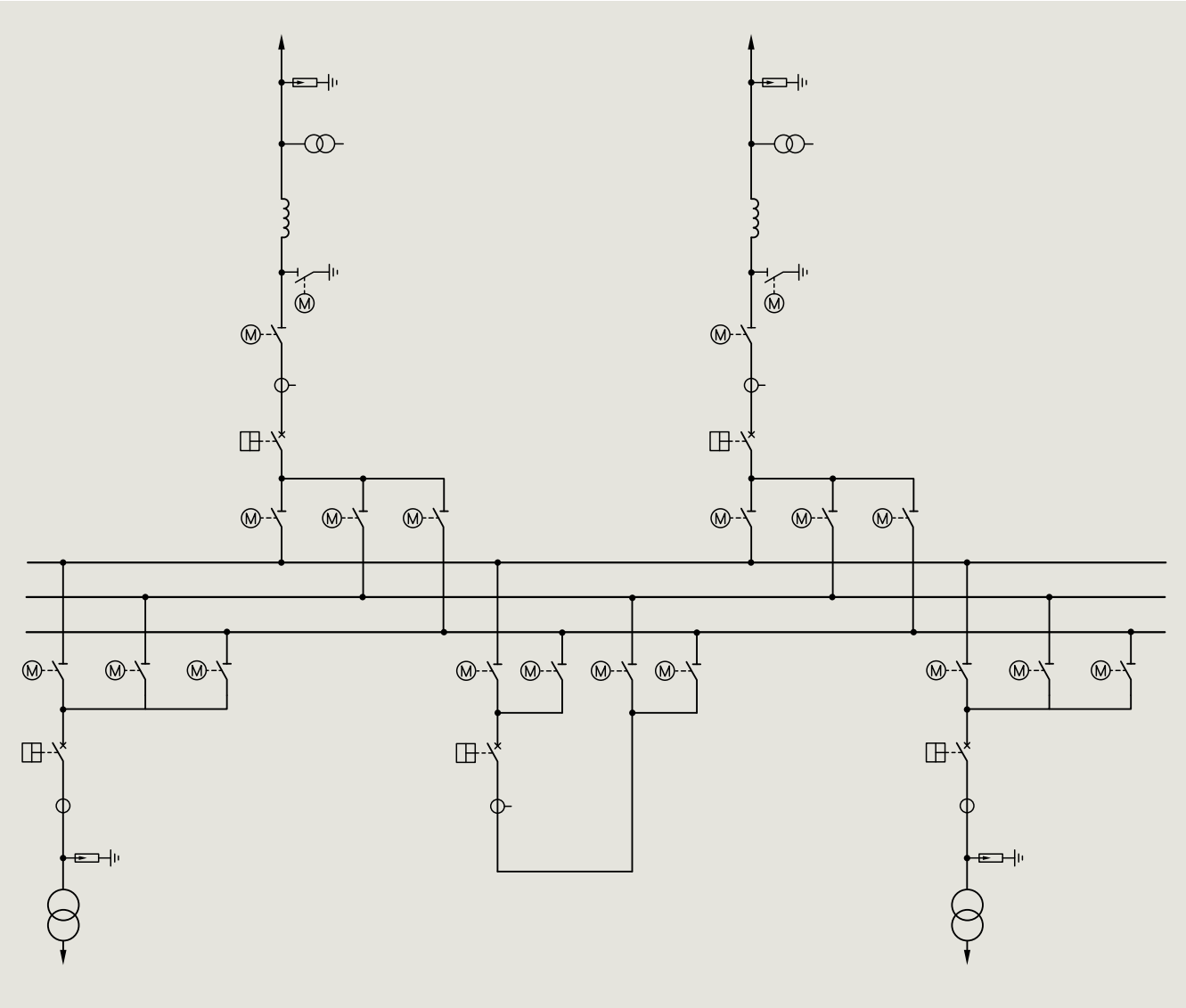

Fig. 3.1-8: Triple-busbar scheme (3 BB)

Triple-busbar scheme (3 BB)

For important substations at the nodes of transmission systems for higher voltage levels, the triple-busbar scheme is used. It is a common scheme in Germany, utilized at the 380 kV level (fig. 3.1-8).

3.1.4 Air-insulated substations

In outdoor installations of open design, all live parts are insulated by air and not covered. Therefore, air-insulated substations (AIS) are always set up in a fenced area. Only authorized personnel have access to this operational area. Relevant national and international specifications that apply to outdoor substations and equipment have to be considered. The IEC 61936 standard is valid for European countries. Insulation coordination, including minimum phase-to-phase and phase-to-earth clearances, is effected in accordance with IEC 60071.

Outdoor switchgear is directly exposed to the effects of the environmental conditions. Therefore, they have to be designed both for electrical and environmental specifications. There is currently no common international standard covering the setup of air-insulated outdoor substations of open design. Siemens designs AIS in accordance with IEC standards, in addition to national standards or customer specifications. The standard IEC 61936-1, "Erection of power installations with rated voltages above 1 kV," demonstrates the typical protective measures and stresses that have to be taken into consideration for air-insulated switchyards.

Protective measures

The protective measures can be categorized as personal protection and functional protection of substations (S/S).

- Personal protection
  - Protective measures against direct contact, i.e., through appropriate covering, obstruction, through sufficient clearance, appropriately positioned protective devices, and minimum height.
  - Protective measures against indirect touching by means of relevant earthing measures in accordance with IEC 61936/DIN VDE 0101 or other required standards.
  - Protective measures during work on equipment, i.e., installation must be planned so that the specifications of DIN EN 50110 (VDE 0105) (e.g., five safety rules) are observed.
- Functional protection
  - Protective measures during operation, e.g., use of switchgear interlocking equipment
  - Protective measures against voltage surges and lightning strikes
  - Protective measures against fire, water and, if applicable, noise
- Stresses
  - Electrical stresses, e.g., rated current, short-circuit current, adequate creepage distances and clearances
  - Mechanical stresses (normal stressing), e.g., weight, static and dynamic loads, ice, wind
  - Mechanical stresses (exceptional stresses), e.g., weight and constant loads in simultaneous combination with maximum switching forces or short-circuit forces, etc.
  - Special stresses, e.g., caused by installation altitudes of more than 1,000 m above sea level, or by earthquakes.

Variables affecting switchgear installation

The switchyard design is significantly influenced by:

- Minimum clearances (depending on rated voltages) between various active parts and between active parts and earth
- Rated and short-circuit currents
- Clarity for operating staff
- Availability during maintenance work; redundancy
- Availability of land and topography
- Type and arrangement of the busbar disconnectors.

The design of a substation determines its accessibility, availability and clarity. It must therefore be coordinated in close cooperation with the system operator. The following basic principles apply: Accessibility and availability increase with the number of busbars. At the same time, however, clarity decreases. Installations involving single busbars require minimum investment, but they offer only limited flexibility for operation management and maintenance. Designs involving one-breaker-and-a-half and double-circuit-breaker arrangements ensure a high redundancy, but they also entail the highest costs.

Systems with auxiliary or bypass busbars have proved to be economical. The circuit-breaker of the coupling feeder for the auxiliary bus allows uninterrupted replacement of each feeder circuit-breaker. For busbars and feeder lines, mostly standard aluminum conductors are used. Bundle conductors are required where currents are high. Because of the additional short-circuit forces between the subconductors (the pinch effect), however, bundle conductors cause higher mechanical stresses at the terminal points. When conductors (particularly standard bundle conductors) are used, higher short-circuit currents cause a rise not only in the aforementioned pinch effect, also in further force maxima in the event of swinging and dropping of the conductor bundle (cable pull). This in turn results in higher mechanical stresses on the switchyard components. These effects can be calculated in an FEM (finite element method) simulation (fig. 3.1-9).

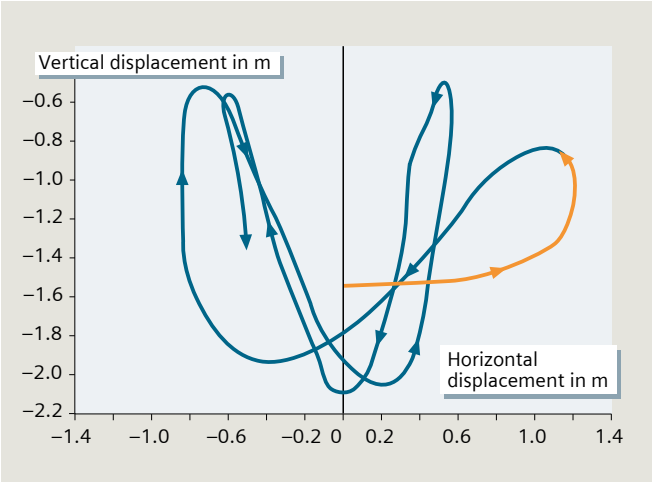

Fig. 3.1-9: FEM calculation of deflection of wire conductors in the event of short circuit

1
2
3
4
5
6
7
8
9
10
11
12
?

Computer-aided engineering/design (CAE / CAD)

A variety of items influence the design of air-insulated substations. In the daily engineering work, database-supported CAE tools are used for the primary and secondary engineering of the substations. The database speeds up all the engineering processes by using predefined solutions and improves the quality (fig. 3.1-10).

Design of air-insulated substations

When rated and short-circuit currents are high, aluminum tubes are increasingly used to replace wire conductors for busbars and feeder lines. They can handle rated currents up to 8,000 A and short-circuit currents up to 80 kA without difficulty. Other influences on the switchyard design are the availability of land, the lie of the land, the accessibility and location of incoming and outgoing overhead-lines, and the number of transformers and voltage levels. A one-line or two-line arrangement, and possibly a U-arrangement, may be the proper solution. Each outdoor switchgear installation, especially for step-up substations in connection with power plants and large transformer substations in the extra-high-voltage transmission system, is therefore unique, depending on the local conditions. HV/MV transformer substations of the distribution system, with repeatedly used equipment and a scheme of one incoming and one outgoing line as well as two transformers together with medium-voltage switchgear and auxiliary equipment, are usually subject to a standardized design.

Preferred designs

Conceivable designs include certain preferred versions that are often dependent on the type and arrangement of the busbar disconnectors.

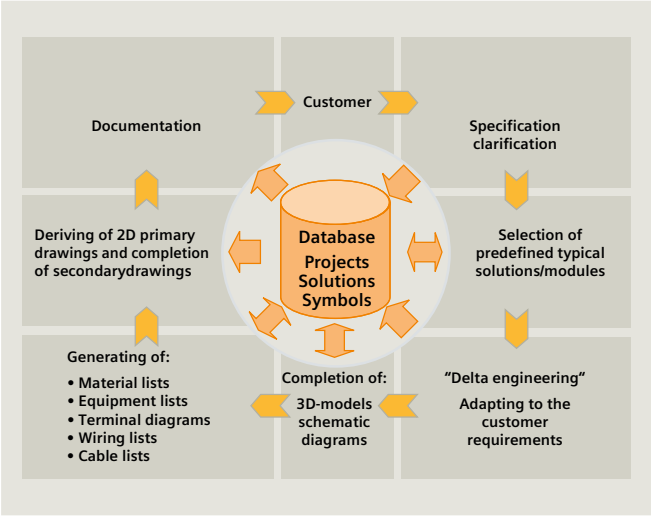

Fig. 3.1-10: Database-supported engineering

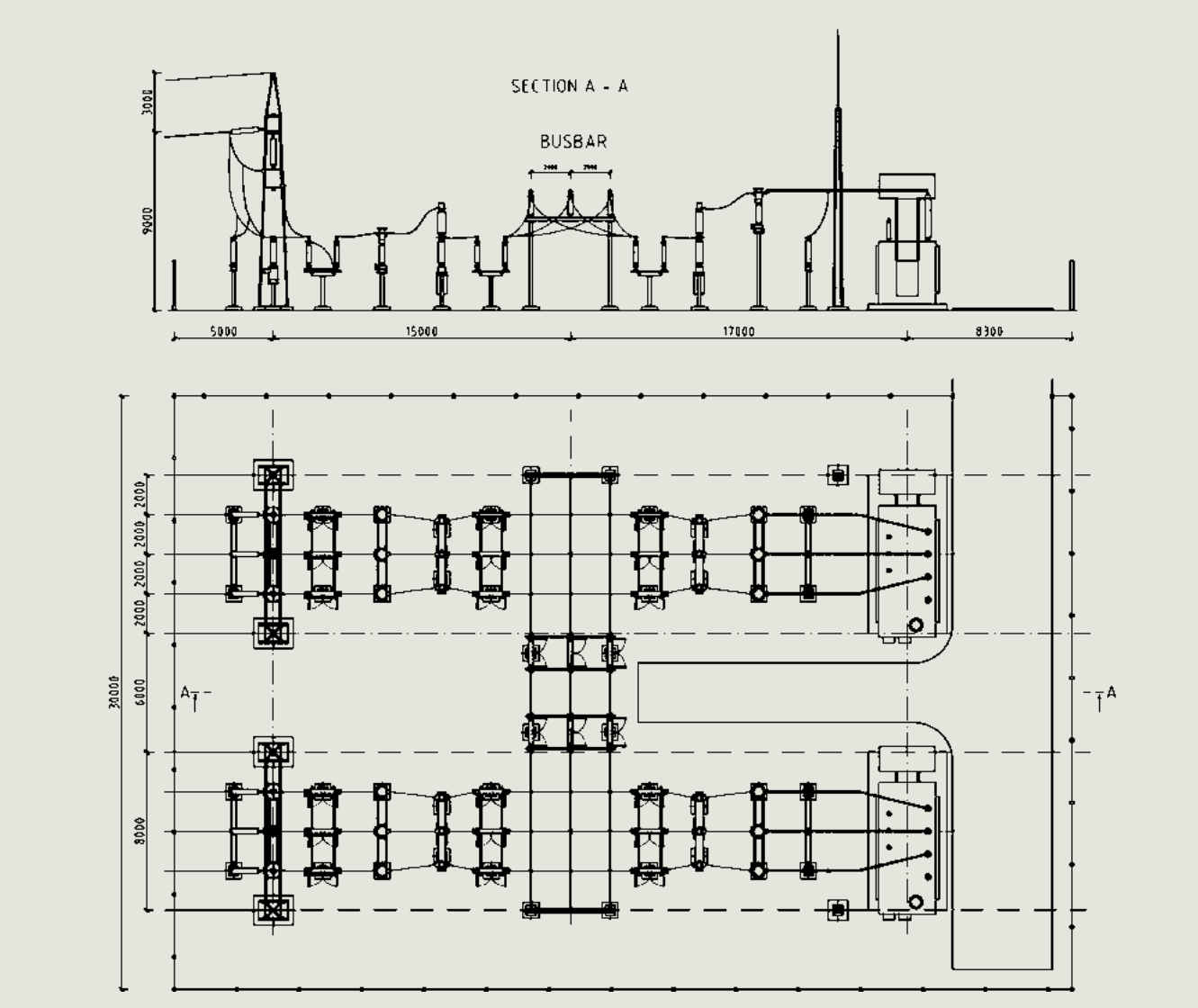

Fig. 3.1-11: H-arrangement 110 kV

H-arrangement
The H-arrangement is preferred for use in applications for feeding industrial consumers. Two overhead-lines are connected with two transformers and interlinked by a double-bus sectionalizer. Thus, each feeder of the switchyard can be maintained without disturbance of the other feeders (fig. 3.1-11, fig. 3.1-12).

Fig. 3.1-12: H-arrangement, 110 kV, Germany

1
2
3
4
5
6
7
8
9
10
11
12
?

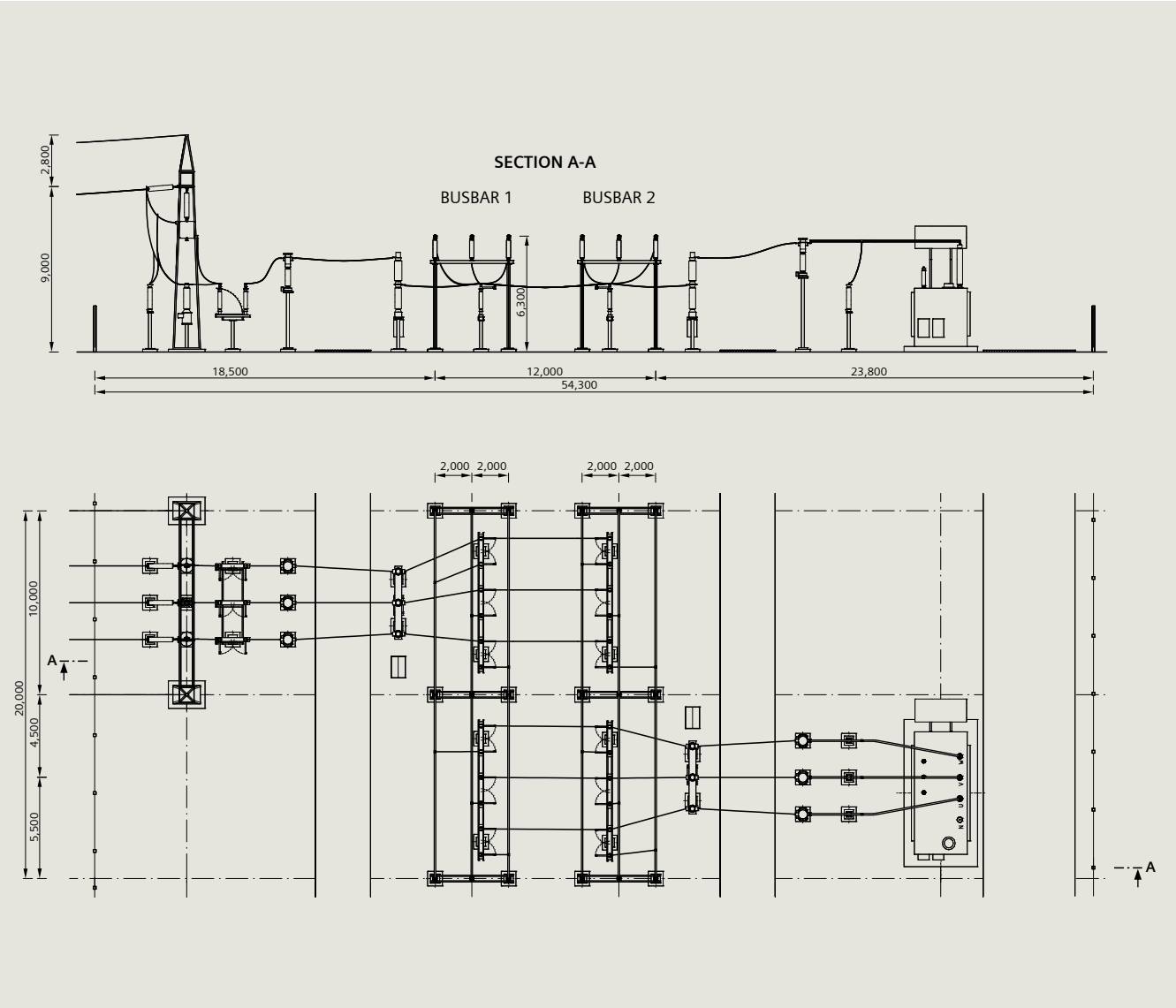

Fig. 3.1-13: In-line arrangement, 110 kV

In-line longitudinal arrangement (Kiellinie®), with center-break disconnectors, preferably 110 to 220 kV
The busbar disconnectors are lined up one behind the other and parallel to the longitudinal axis of the busbar. It is preferable to have either wire-type or tubular busbars. Where tubular busbars are used, gantries are required for the outgoing overhead lines only. The system design requires only two conductor levels and is therefore clear. The bay width is quite large (in-line arrangement of disconnectors), but the bay length is small (fig. 3.1-13, fig. 3.1-14).

Fig. 3.1-14: Busbar disconnectors "in line", 110 kV, Germany

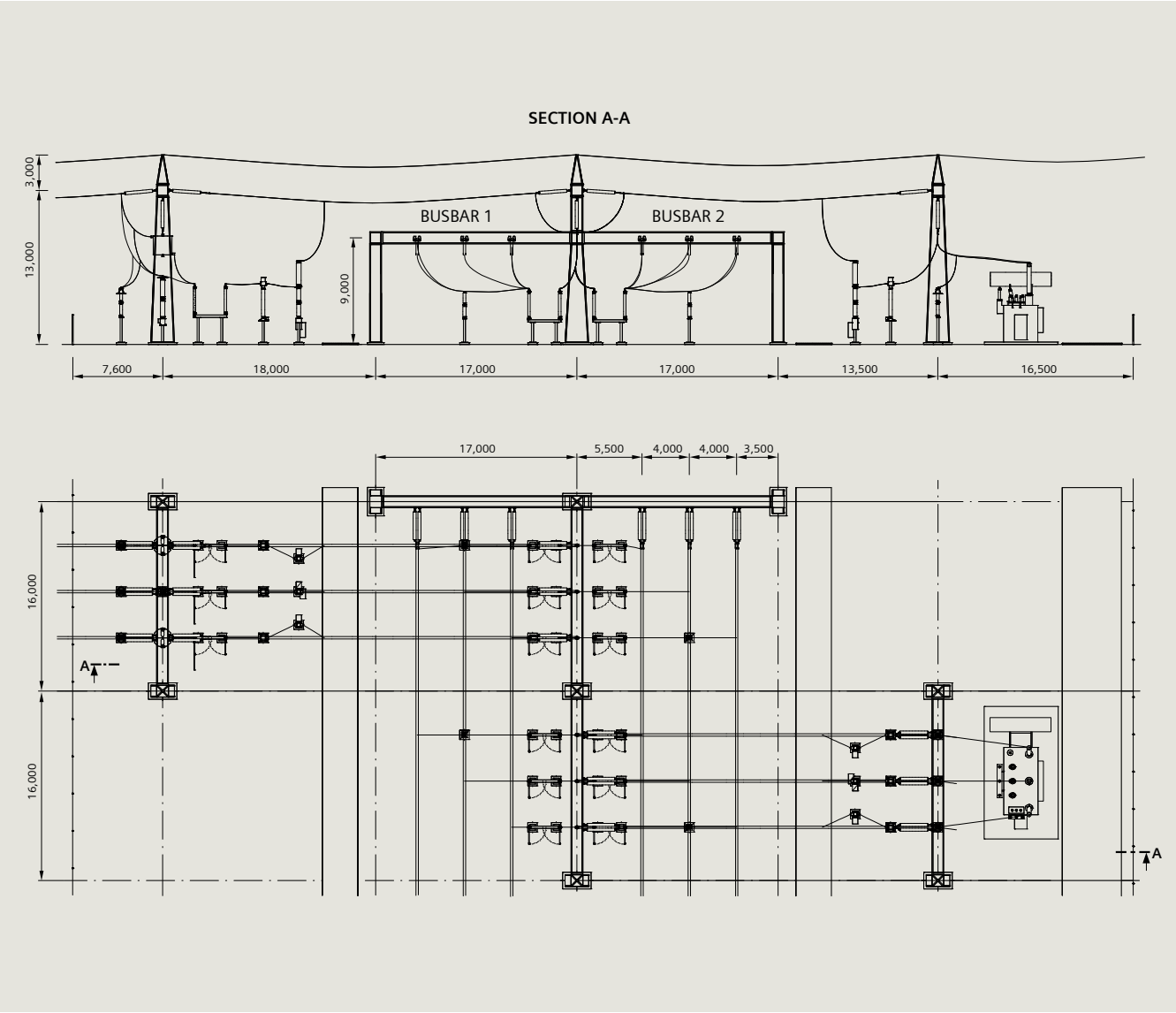

Fig. 3.1-15: Central / center tower arrangement, 220 kV

Central / center arrangement (classical arrangement) layout with center-break disconnectors, normally only for 245 kV

The busbar disconnectors are arranged side-by-side and parallel to the longitudinal axis of the feeder. Wire-type busbars located at the top are commonly used; tubular busbars are also possible. This arrangement enables the conductors to be easily jumpered over the circuit-breakers, and the bay width to be made smaller than that of in-line designs. With three conductor levels, the system is relatively clear, but the cost of the gantries is high (fig. 3.1-15, fig. 3.1-16).

Fig. 3.1-16: Central/center tower arrangement, 220 kV, Egypt

1
2
3
4
5
6
7
8
9
10
11
12

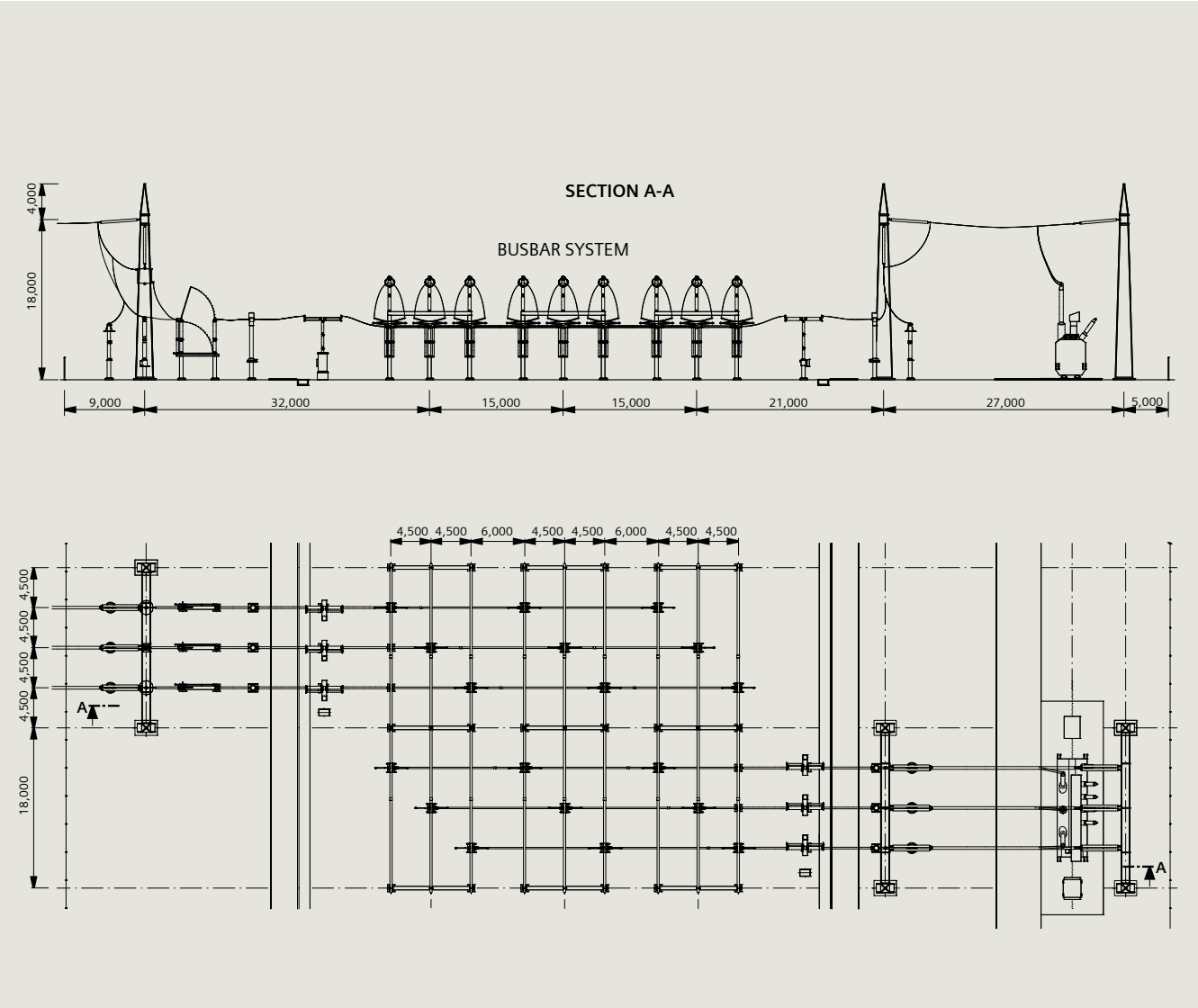

Fig. 3.1-17: Diagonal arrangement, 380 kV

Diagonal layout with pantograph disconnectors, preferably 110 to 420 kV

The pantograph disconnectors are placed diagonally to the axis of the busbars and feeder. This results in a very clear and most space-saving arrangement. Wire and tubular conductors are customary. The busbars can be located above or below the feeder conductors (fig. 3.1-17, fig. 3.1-18).

Fig. 3.1-18: Busbar disconnectors in diagonal arrangement, 380 kV, Germany

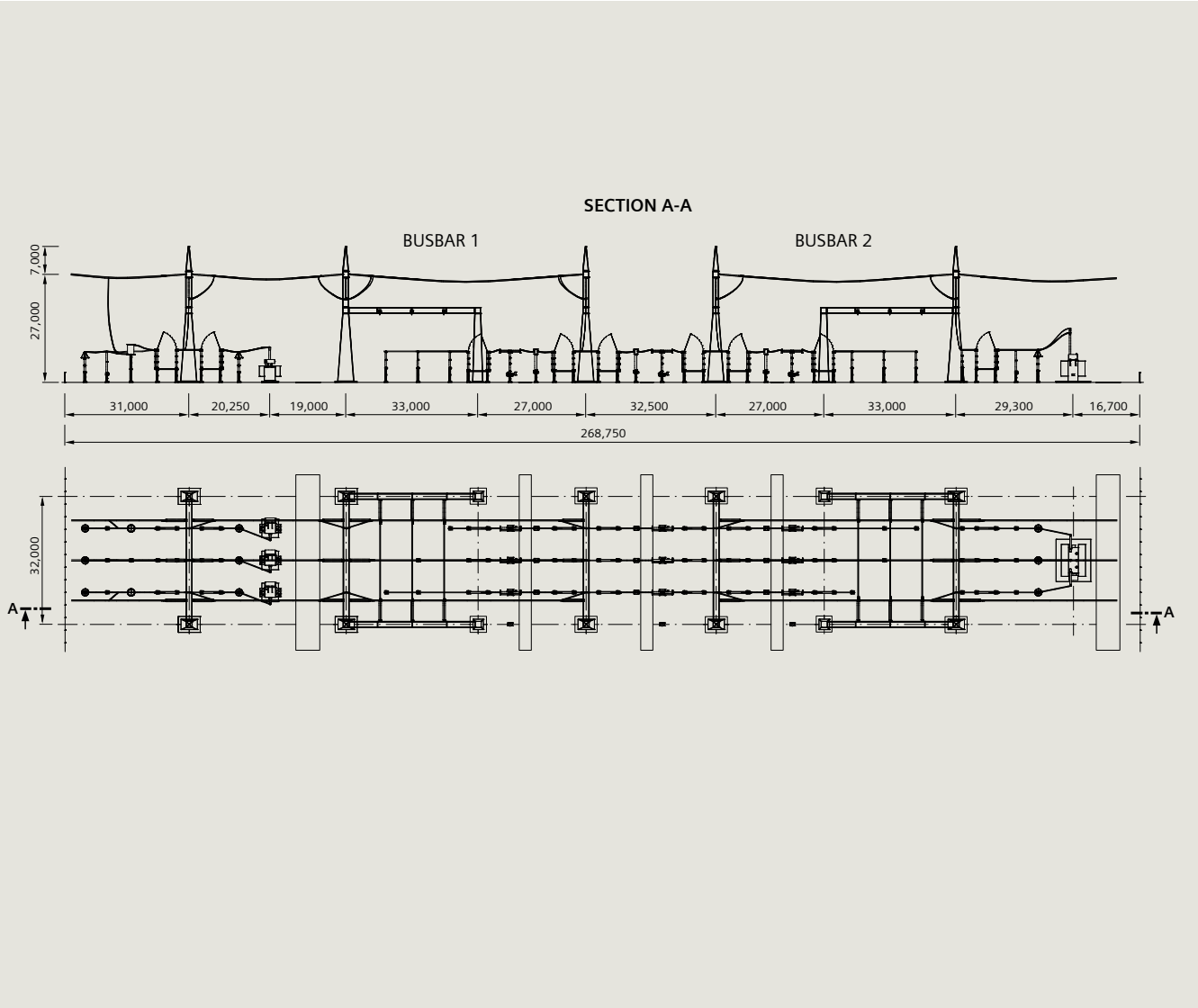

Fig. 3.1-19: One-breaker-and-a-half arrangement, 500 kV

One-breaker-and-a-half layout, preferably up to 220 to 800 kV

The one-breaker-and-a-half arrangement ensures high supply reliability; however, the expenditure for equipment is high as well. The busbar disconnectors are of the pantograph, rotary or vertical-break type. Vertical-break disconnectors are preferred for the feeders. The busbars located at the top can be either the wire or tubular type. Two arrangements are customary:

- Internal busbar, feeders in H-arrangement with two conductor levels
- External busbar, feeders in-line with three conductor levels (fig. 3.1-19, fig. 3.1-20).

Fig. 3.1-20: One-breaker-and-a-half arrangement, 500 kV, Pakistan

1
2
3
4
5
6
7
8
9
10
11
12

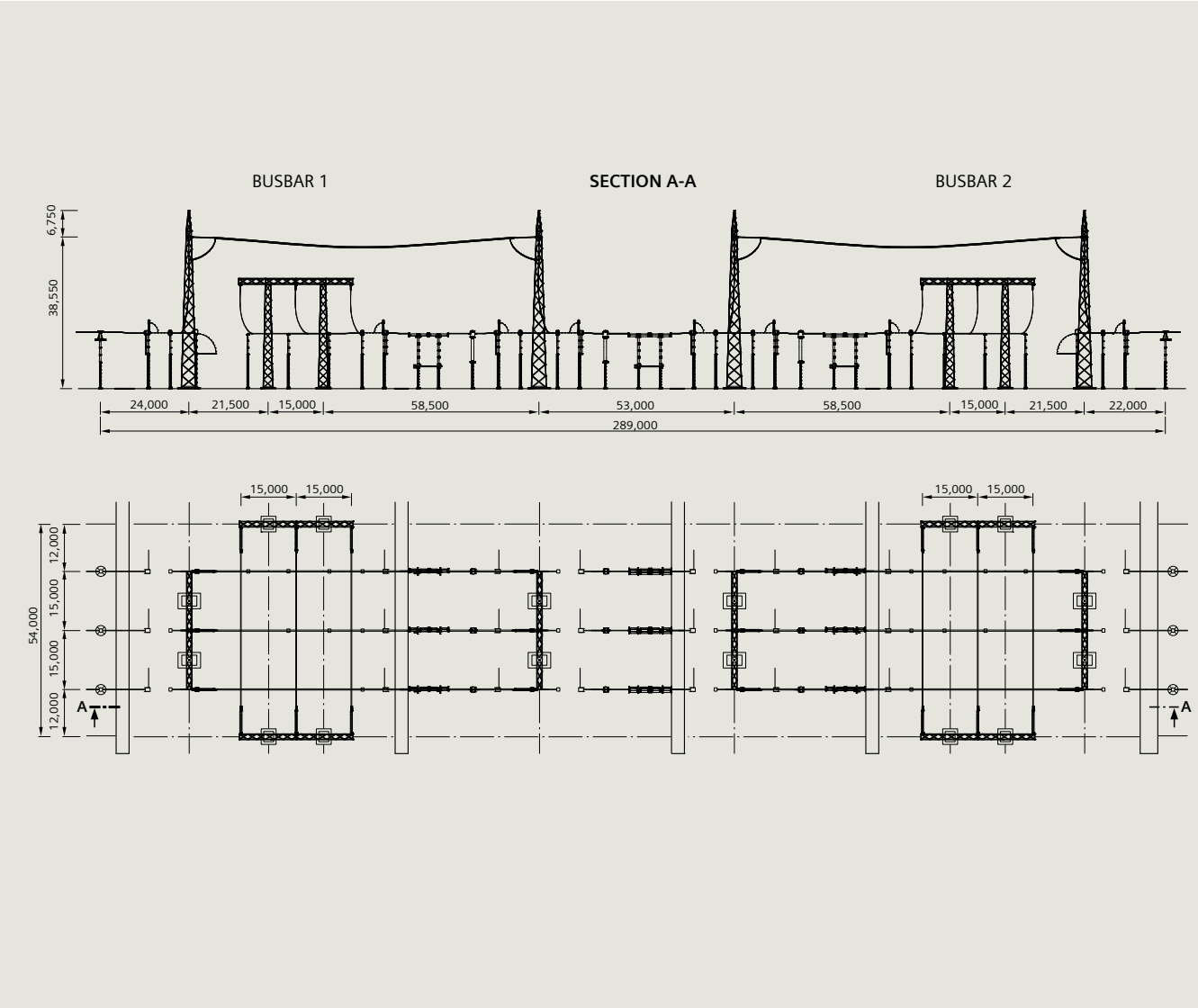

Fig. 3.1-21: One-breaker-and-a-half arrangement, 800 kV

One-breaker-and-a-half layout, preferably 220 to 800 kV
The one-breaker-and-a-half arrangement ensures high supply reliability; however, the expenditure for equipment is high as well. The busbar disconnectors are of the pantograph, rotary or vertical-break type. Vertical-break disconnectors are preferred for the feeders. The busbars located at the top can be either the wire or tubular type. Two arrangements are customary:

- Internal busbar, feeders in H-arrangement with two conductor levels
- External busbar, feeders in-line with three conductor (fig. 3.1-21, fig. 3.1-22).

Fig. 3.1-22: One-breaker-and-a-half arrangement, 800 kV, India

3.1.5 Mixed technology (Compact / hybrid solutions)

Wherever there is a lack of space, system operators have to rely on space-saving outdoor switchgear, especially in regions where smaller-scale transformer substations prevail and in industrial plants. For rated voltages from 72.5 to 170 kV, Siemens offers two different conventional switchgear versions for a reliable and cost-efficient power supply:

- SIMOBREAKER, outdoor switchyard featuring a side-break disconnector
- SIMOVER, outdoor switchyard featuring a pivoting circuit-breaker
- HIS, highly integrated switchgear
- DTC, dead-tank compact.

SIMOBREAKER – Substation with rotary disconnector

The design principle of SIMOBREAKER provides for the side-break disconnector blade to be located on the rotating post insulator, which establishes the connection between the circuit-breaker and the transformer. Because the circuit-breaker, the disconnector, the earthing switch and the instrument transformer are integrated into SIMOBREAKER, there is no need for a complex connection with cables and pipes, or for separate foundations, steel, or earthing terminals for each individual device. This means that the system operator gets a cost-efficient and standardized overall setup from one source and has no need to provide any items. Coordination work is substantially reduced, and interface problems do not even arise.

SIMOBREAKER can also be used as indoor switchgear. Installation inside a building ensures protection against the elements. This can be an enormous advantage, particularly in regions with extreme climates, but it is also relevant in industrial installations exposed to excessive pollution, e.g., in many industrial plants (fig. 3.1-23, fig. 3.1-24).

Fig. 3.1-23: SIMOBREAKER module

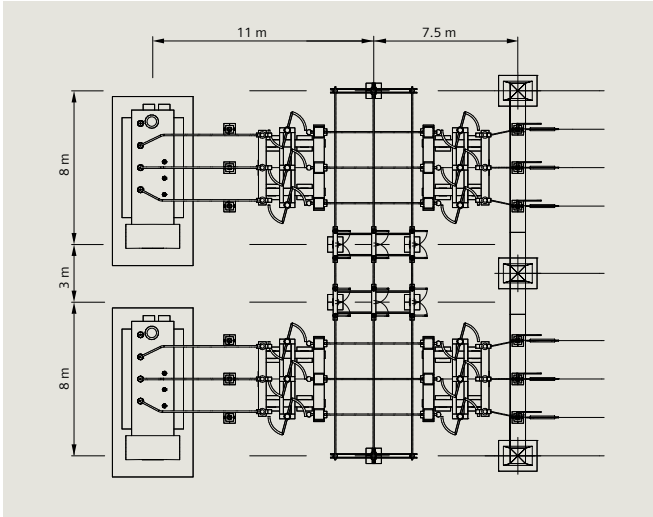

Fig. 3.1-24: SIMOBREAKER (schematic)

1
2
3
4
5
6
7
8
9
10
11
12
?

SIMOVER – Switchgear with withdrawable circuit-breaker

The compact SIMOVER switchgear, specially conceived for substations with single busbars, features a pivoting circuit-breaker. It is excellent for use in small transformer substations such as windfarms or any plants where space is restricted. It integrates all components of a high-voltage bay. There are no busbar and outgoing disconnectors for the feeders. The cabling is simple, and the switching status is clear. Drive technology is improved and the drive unit is weatherproofed. Pre-assembled components reduce installation times. In SIMOVER, all components of a high-voltage outdoor switchgear bay, including the isolating distances, are integrated in one unit. The instrument transformers and the local control cubicle are part of this substation design.

The concept behind SIMOVER is based on customary type-tested standard components. This ensures high reliability. Thanks to economizing on the disconnectors, and to the integration of the instrument transformers and the local control cubicle, implementation costs are considerably reduced. All components needed for the full scope of functioning of the movable circuit-breaker can be obtained from a single source, so there is no need for customer-provided items, coordination work is greatly reduced and interface problems do not even arise (fig. 3.1-25, fig. 3.1-26).

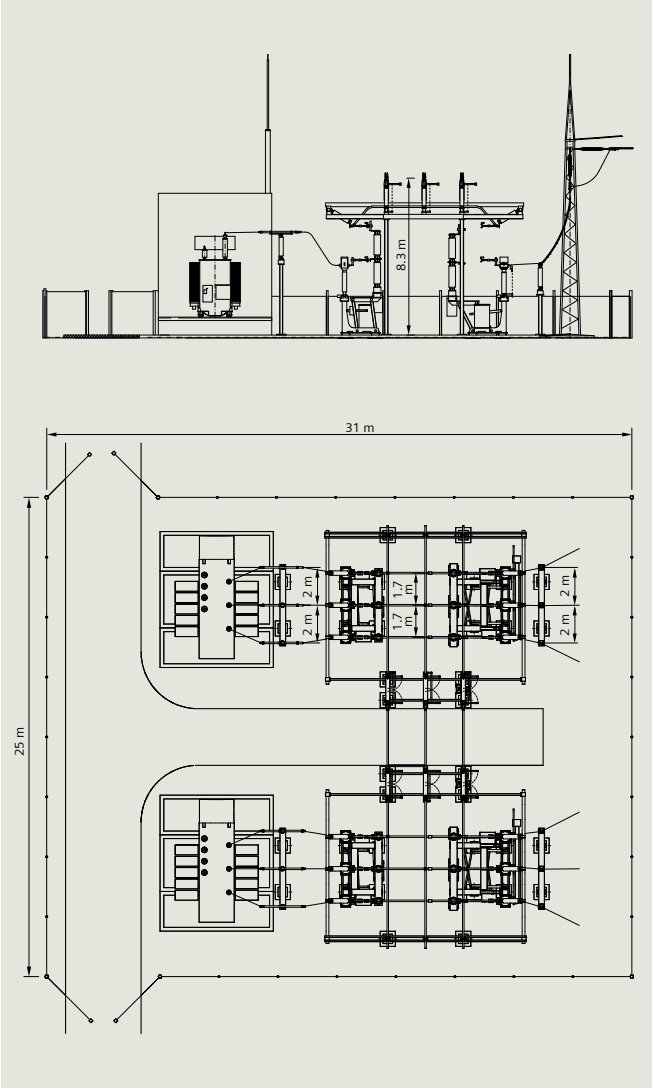

Fig. 3.1-25: SIMOVER H-arrangement (schematic)

Fig. 3.1-26: H-arrangement with SIMOVER, 145 kV, Czech Republic

Dead-tank compact (DTC)

The dead-tank compact is another compact solution for the 145 kV voltage level: a dead-tank circuit-breaker together with GIS modules for disconnectors (fig 3.1-27, fig. 3.1-28). For more information, please refer to section 4.1.1.

Fig 3.1-27: Dead Tank Compact (DTC)

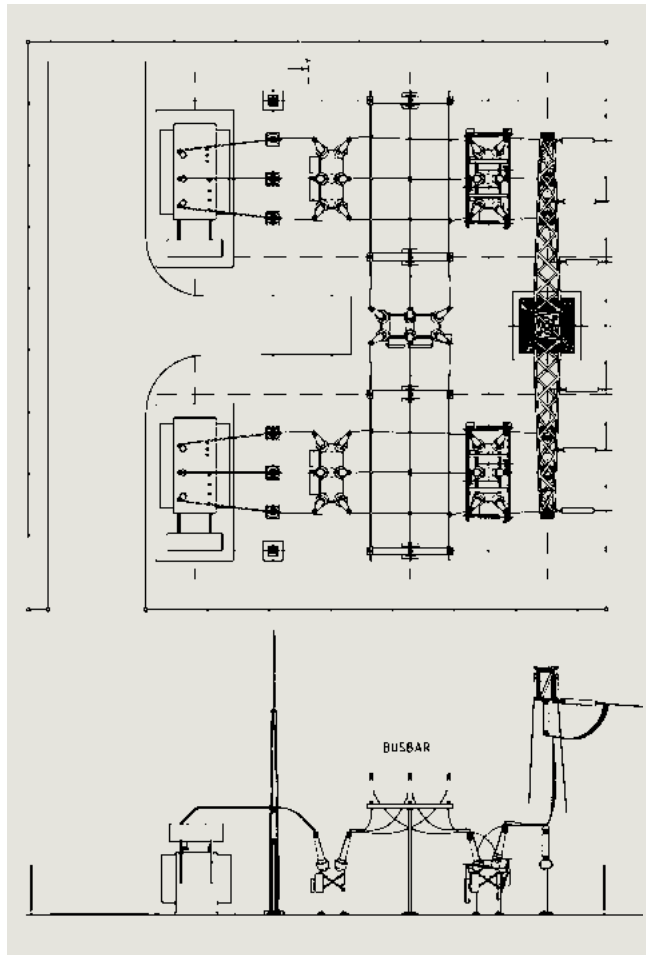

Fig. 3.1-28: DTC solution (schematic)

1
2
3
4
5
6
7
8
9
10
11
12
?

Highly integrated switchgear (HIS)

Highly integrated switchgear (HIS), fig. 3.1-29 and fig. 3.1-30 combines the advantages of air-insulated installations with those of gas-insulated switchgear technology. HIS switchgear is available up to 550 kV. The compact HIS switchgear is especially suited

- for new substations in a limited space
- where real estate prices are high
- where environmental conditions are extreme
- where the costs of maintenance are high.

HIS arrangements are compact solutions used mainly for renewal or expansion of air-insulated outdoor and indoor substations, particularly if the operator wants to carry out modifications while the switchgear is in service. In new construction projects, high site prices and increasingly complex approval procedures mean that the space requirement is the prime factor in costing. With the HIS solution, the circuit-breakers, disconnectors, earthing switches and transformers are accommodated in compressed gastight enclosures, thus rendering the switchgear extremely compact.

Planning principles

For air-insulated outdoor substations of open design, the following planning principles must be taken into account:

- High reliability
  - Reliable mastering of normal and exceptional stresses
  - Protection against surges and lightning strikes
  - Protection against surges directly on the equipment concerned (e.g., transformer, HV cable)
- Good clarity and accessibility
  - Clear conductor routing with few conductor levels
  - Free accessibility to all areas (no equipment located at inaccessible depth)
  - Adequate protective clearances for installation, maintenance and transportation work
  - Adequately dimensioned transport routes
- Positive incorporation into surroundings
  - As few overhead conductors as possible
  - Tubular instead of wire-type busbars
  - Unobtrusive steel structures
  - Minimal noise and disturbance level
  - EMC earthing system for modern control and protection
- Fire precautions and environmental protection
  - Adherence to fire protection specifications and use of flame-retardant and non-flammable materials
  - Use of environmentally compatible technology and products.

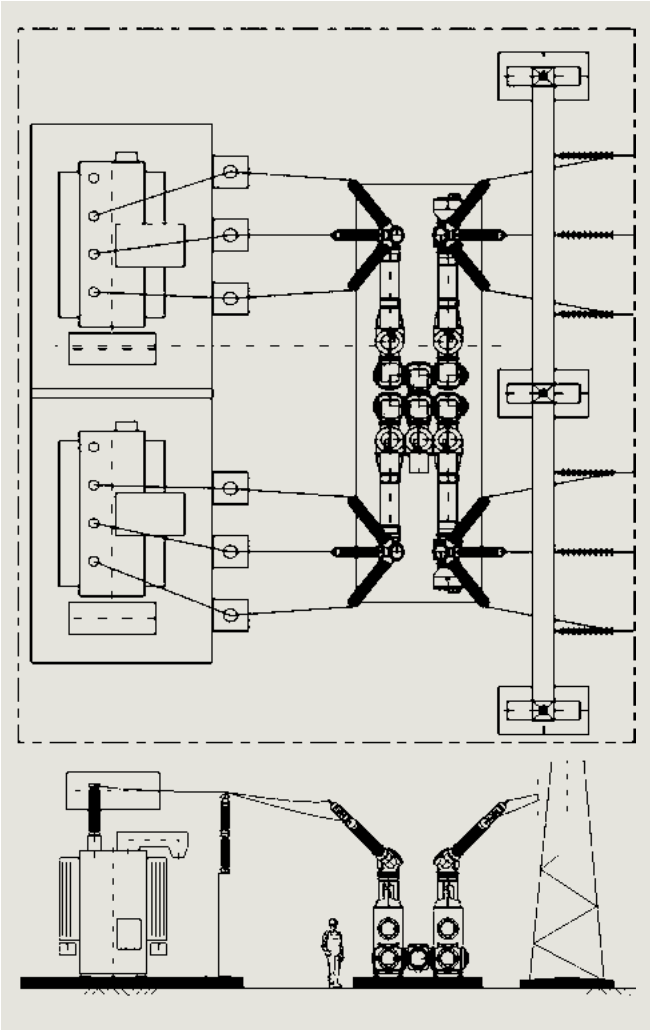

Fig. 3.1-29: H-arrangement HIS

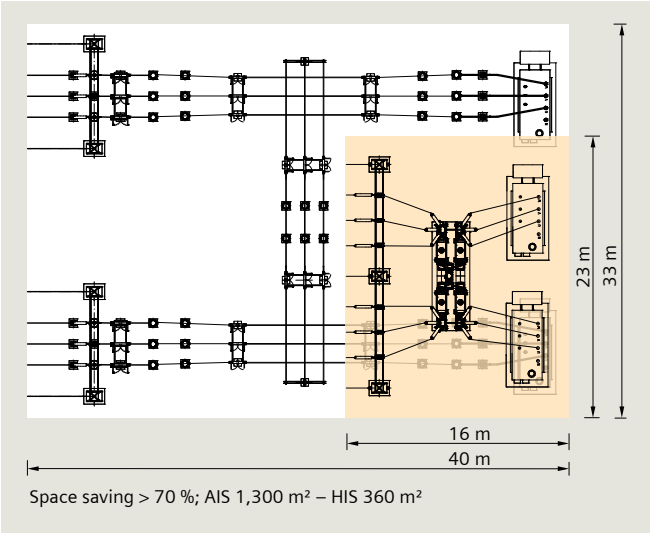

Fig. 3.1-30: HIS for renewal of AIS space relations

3.1.6 Gas-insulated switchgear for substations

Characteristic features of gas-insulated switchgear

Since 1968, the concept of Siemens gas-insulated metal-enclosed high-voltage switchgear has proved itself in more than 34,500 feeders in all regions of the world (table 3.1-1). Gas-insulated metal-enclosed high-voltage switchgear (GIS) (fig. 3.1-31) is constantly gaining ground on other types of switchgear because it offers the following outstanding advantages:

- Minimum space requirements:
  Where the availability of land is low and/or prices are high, e.g., in urban centers, industrial conurbations, mountainous regions with narrow valleys, or in underground power plants, gas-insulated switchgear is replacing conventional switchgear due to its very small space requirements.
- Full protection against contact with live parts:
  The surrounding metal enclosure ensures maximum safety for personnel under all operating and fault conditions.
- Protection against pollution:
  Its metal enclosure fully protects the switchgear interior against environmental effects such as salt deposits in coastal regions, industrial vapors and precipitates, and sandstorms. The compact switchgear can be installed as an indoor or outdoor solution.
- Free choice of installation site:
  The small site area required for gas-insulated switchgear saves expensive grading and foundation work, e.g., in permafrost zones. Another advantage is the rapid on-site installation and commissioning because of the short erection time and the use of prefabricated and factory-tested bay units.
- Protection of the environment:
  The necessity to protect the environment often makes it difficult to install outdoor switchgear that has a conventional design. Gas-insulated switchgear, however, can almost always be designed to blend well with the surroundings. Thanks to its modular design, gas-insulated metal-enclosed switchgear is very flexible, and meets all the requirements for configuration relating to network design and operating conditions.

Each circuit-breaker bay includes the full range of disconnecting and earthing switches (regular or make-proof), instrument transformers, control and protection equipment, and interlocking and monitoring facilities commonly used for this type of installation.

Besides the traditional circuit-breaker bay, other circuits such as single busbar, single-busbar arrangement with bypass busbar, coupler and bay for double and triple busbar can be supplied.

More than 50 years experience with gas-insulated switchgear	
1960	Start of fundamental studies in research and development of SF_6 technology
1964	Delivery of first SF_6 circuit-breaker
1968	Delivery of first GIS
1974	Delivery of first GIL (420 kV)
1997	Introduction of intelligent, bay-integrated control, monitoring and diagnostic
1999	Introduction of newest GIS generation: self-compression interrupter unit and spring-operated mechanism
2000	Introduction of the trendsetting switchgear concept HIS (Highly Integrated Switchgear) for extension, retrofit and new compact AIS substations
2005	First GIS with electrical endurance capability (class E2)
2007	Introduction of 72.5 kV GIS – a new dimension in compactness
2009	New generation of 145 kV 40 kA GIS
2010	New generation of 420 kV 63 kA GIS
2011	New 170 kV 63 kA GIS
2012	New 420 kV 80 kA GIS
2013	New 245 kV 80 / 90 kA GIS
2016	New 72.5 kV vacuum and clean-air GIS

Table. 3.1-1: Siemens experience with gas-insulated switchgear

Fig. 3.1-31: 8DN8 GIS for a rated voltage of 110 kV

1 2 3 4 5 6 7 8 9 10 11 12 ?

				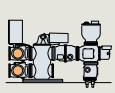	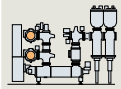	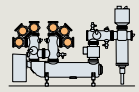	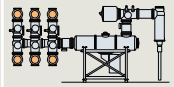	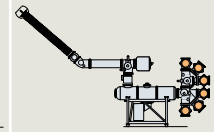
Switchgear type			8VM1	8DN8	8DN9	8DQ1		
Rated voltage	kV	up to	72.5	145 / 170	245	420	420	550
Rated frequency	Hz		50	50 / 60				
Rated short-duration power-frequency withstand voltage (1 min)	kV	up to	140	275 / 325	460	650	650	740
Rated lightning impulse withstand voltage (1.2 / 50 µs)	kV	up to	325	650 / 750	1,050	1,425	1,425	1,550
Rated switching impulse withstand voltage (250 / 2,500 µs)	A	up to	–	–	–	1,050	1,050	1,175
Rated normal current, busbar	A	up to	–	3,150 / 4,000	4,000	6,300	6,300	5,000
Rated normal current, feeder	kA	up to	1,250	3,150 / 4,000	4,000	5,000	5,000	5,000
Rated short-circuit breaking current	kA	up to	25	40 / 63	50	63 / 80* / 90*	80	63
Rated peak withstand current	kA	up to	62,5	108 / 170	135	170 / 216* / 243*	216	170
Rated short-time withstand current (up to 3 s)	kA	up to	–	40 / 63	50	63 / 80*	80	63
Rated short-time withstand current (up to 1 s)	kA	up to	25	–	–	90*	–	–
Leakage rate per year and gas compartment (type-tested)	%		< 0.1					
Driving mechanism of circuit-breaker			Stored-energy spring (common pole drive)	Stored-energy spring (common or single pole drive)	Stored-energy spring (single pole drive)			
Rated operating sequence			O-0.3 s-CO-3 min-CO CO-15 s-CO					
Insulation medium			Clean-air	SF_6				
Interrupter technology			Vacuum	Self-compression principle				
Installation			Indoor / outdoor		Indoor	Indoor / outdoor		
Standards			IEC	IEC/IEEE/GOST				
Bay width	mm		1,200	800 / 1,000	1,500	2,200	3,600	
First major inspection	years		> 25					
Expected lifetime	years		> 50					
Other values on request – * These values apply to 245 kV rated voltage								

Table. 3.1-2: Product range of GIS

Product range of GIS for substations

The Siemens product range covers GIS from 72.5 up to 550 kV rated voltage (table 3.1-2).

The development of this switchgear has been based on two overall production targets: to meet the high technical standards required of high-voltage switchgear, and to provide maximum customer benefit.

This objective can only be achieved by incorporating all processes in the quality management system, which has been introduced and certified in accordance with EN 29001/DIN EN ISO 9001.

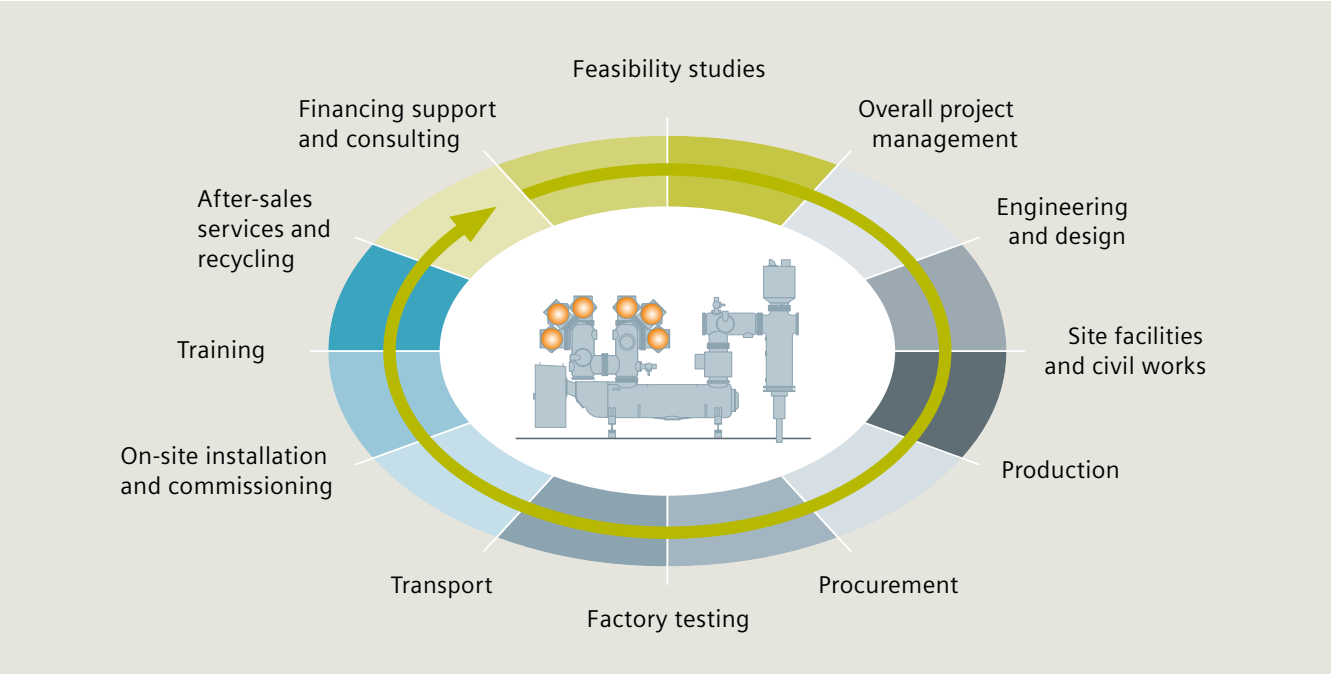

Fig. 3.1-32: GIS for the full value chain

Siemens GIS switchgear meets all performance, quality and reliability demands including:

- Compact and low-weight design:
  Small building dimensions and low floor loads, a wide range of options for the utilization of space, and less space taken up by the switchgear.
- Safe encapsulation:
  An outstanding level of safety based on new manufacturing methods and optimized shape of enclosures.
- Environmental compatibility:
  No restrictions regarding location choice due to minimum space requirements, extremely low noise and EMC emission, as well as effective gas-sealing system (leakage < 0.1% per year per gas compartment). Modern spring mechanisms that are currently available for the whole GIS 8D product spectrum eliminate the need for hydraulic oil.
- Economical transport:
  Simplified fast transport and reduced costs because of minimum shipping units.
- Low operating costs:
  The switchgear is virtually maintenance-free, e.g., contacts of circuit-breakers and disconnectors are designed for extremely long endurance, motor operating mechanisms are lubricated for life, and the enclosure is corrosion-free. This means that the first inspection is only required after 25 years of operation.
- High reliability:
  The longstanding experience of Siemens in design, production and commissioning – more than 420,000 bay operating years in over 34,500 feeders worldwide – is testament to the fact that the Siemens products are highly reliable. The mean time between failures (MTBF) is more than 1,000 bay years for major faults. A quality management system certified in accordance with ISO 9001, which is supported by highly qualified employees, ensures high quality throughout the whole process chain. Our services provide added value through constant project-related support and consulting right from the start – and throughout the entire lifecycle of our switchgear right up to disposal and recycling of old switchgear (fig. 3.1-32).
- Smooth and efficient installation and commissioning:
  Transport units are fully assembled, tested at the factory, and filled with SF_6 gas at reduced pressure. Coded plug connectors are used to cut installation time and minimize the risk of cabling failures.
- Routine tests:
  All measurements are automatically documented and stored in the electronic information system, which provides quick access to measured data for years.

Clean-air compact switchgear (fig. 3.1-33)

Based on more than 40 years of experience in producing medium-voltage vacuum interrupters and more than 3 million delivered units, Siemens introduced this proven technology to high-voltage power networks in 2010. All installed vacuum circuit-breakers up to 72.5 kV are under successful operation (see section 4.1.1).

Siemens vacuum circuit-breakers are designed in a well-proven modular platform concept. Operating mechanism, control system, base frame, kinematic chain, and insulator designs are based on decades of manufacturing and operating experience.

The vacuum high-voltage circuit-breaker offers the same benefits as the Siemens SF_6 circuit-breaker portfolio:

- Reliable making and breaking capabilities
- Excellent interrupting performance at rated nominal current and rated short-circuit current
- High-performance and maintenance-free operating mechanism
- Highest availability and long working life.

Fig. 3.1-33: 8VM1 switchgear bay up to 72,5 kV

Clean-air as insulating medium

Vacuum interrupting technology enables the implementation of clean-air as insulating medium for 72.5 kV gas-insulated switchgear (GIS). The clean air is compressed up to the operation pressure into the single switchgear gas compartment, consisting of vacuum circuit-breaker, disconnectors and earthing switches.

A compact and maintenance-free GIS solution is designed for offshore wind turbine installations based on proven component technology.

Vacuum interrupters and Siemens' clean-air technology realize the F-gas (fluorinated greenhouse gas)-free insulation, and support the demand for fully environmentally compatible switchgear. Our environmentally friendly portfolio will be further extended.

Main features

- Worldwide leading F-gas-free, environmentally friendly, and CO_2-neutral technology
- Innovative clean-air insulation medium
- Proven vacuum interrupter unit technology
- Compact GIS solution designed for offshore wind turbine installations
- Optimal installation, commissioning, operation and service concept
- Completely factory-assembled and tested switchgear
- Shipped in single transport unit, ready for cable connection
- Same GIS dimensions for all typical switchgear configurations
- One gas compartment for circuit-breaker, disconnectors and earthing switches
- Component design based on well-proven technology
- Cable terminals for T-connectors
- Maintenance-free operation
- Safe and easy handling and operation
- High operational safety.

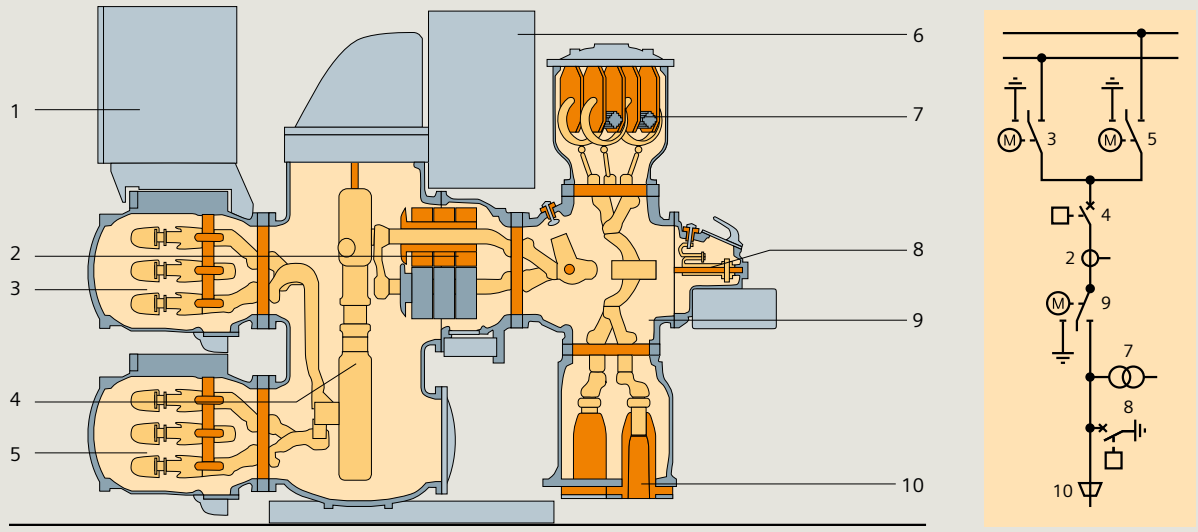

1 Integrated local control cubicle
2 Current transformer
3 Busbar II with disconnector and earthing switch
4 Interrupter unit of the circuit-breaker
5 Busbar I with disconnector and earthing switch
6 Stored-energy spring mechanism with circuit-breaker control unit
7 Voltage transformer
8 High-speed earthing switch
9 Outgoing module with disconnector and earthing switch
10 Cable sealing end

Fig. 3.1-34: 8DN8 switchgear bay up to 145 kV

3-phase enclosures are used for SF_6-insulated switchgear type 8DN8 up to 170 kV to achieve small and compact component dimensions. The low bay weight ensures low floor loading, and helps to reduce the cost of civil works and minimize the footprint. The compact low-weight design allows installation almost anywhere. Capital cost is reduced by using smaller buildings or existing ones, e.g., when replacing medium-voltage switchyards with the 145 kV GIS (fig. 3.1-35).

The bay is based on a circuit-breaker mounted on a supporting frame (fig. 3.1-34). A special multifunctional cross-coupling module combines the functions of the disconnector and earthing switch in a 3-position switching device. It can be used as:

- An active busbar with an integrated disconnector and work-in-progress earthing switch (fig. 3.1-34, pos. 3 and 5)
- An outgoing feeder module with an integrated disconnector and work-in-progress earthing switch (fig. 3.1-34, pos. 9)
- A busbar sectionalizer with busbar earthing.

Cable termination modules can be equipped with either conventional sealing ends or the latest plug-in connectors (fig. 3.1-34, pos. 10). Flexible 1-pole modules are used to connect overhead lines and transformers with a splitting module that links the 3-phase-enclosed switchgear to the 1-pole connections.

Fig. 3.1-35: 8DN8 GIS for a rated voltage of 145 kV

Thanks to their compact design, the completely assembled and factory-tested bays can be shipped as a single transport unit. Fast erection and commissioning on site ensure the highest possible quality.

The feeder control and protection can be installed in a bay-integrated local control cubicle mounted onto the front of each bay (fig. 3.1-34, pos. 1). Moreover, state-of-the-art monitoring devices are available at the system operator's request, e.g., for partial discharge online monitoring.

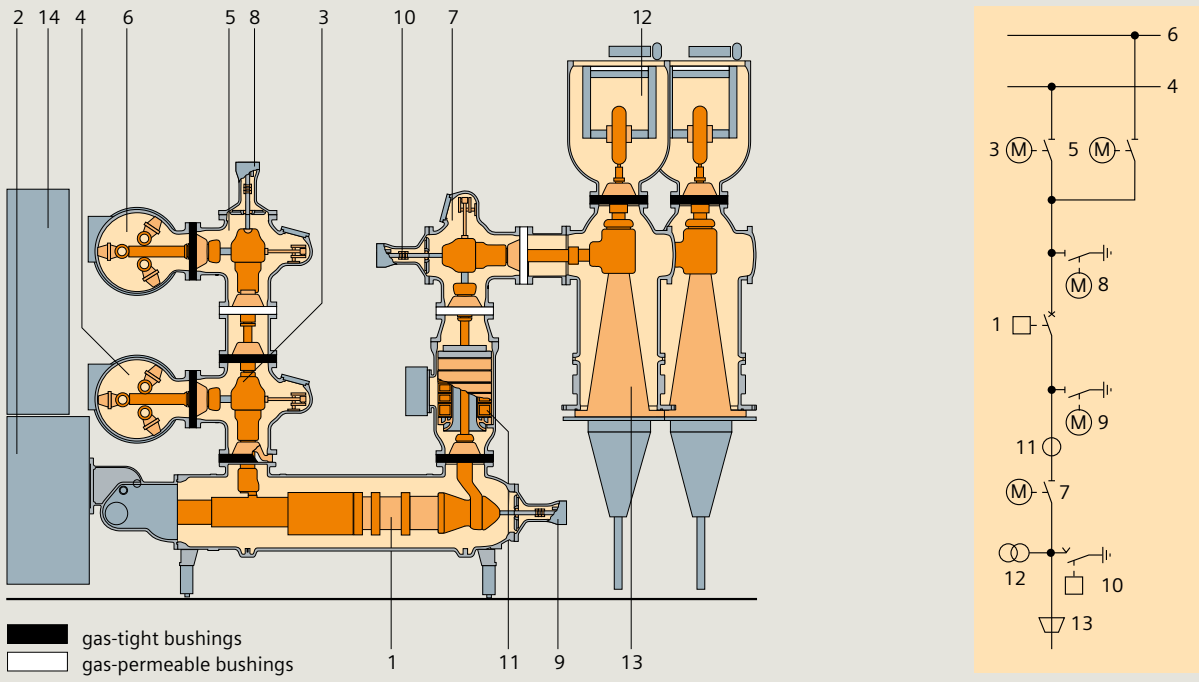

1. Circuit-breaker interrupter unit
2. Stored-energy spring mechanism with circuit-breaker control unit
3. Busbar disconnector I
4. Busbar I
5. Busbar disconnector II
6. Busbar II
7. Outgoing disconnector
8. Earthing switch
9. Earthing switch
10. High-speed earthing switch
11. Current transformer
12. Voltage transformer
13. Cable sealing end
14. Integrated local control cubicle

Fig. 3.1-36: 8DN9 switchgear bay up to 245 kV

The clear bay configuration of the lightweight and compact 8DN9 switchgear is evident at first glance. Control and monitoring facilities are easily accessible despite the switchgear's compact design.

The horizontally arranged circuit-breaker forms the basis of every bay configuration. The operating mechanism is easily accessible from the operator area. The other bay modules – of 1-phase-enclosed switchgear design, for example the circuit-breaker module – are located on top of the circuit-breaker. The 3-phase-enclosed passive busbar is partitioned off from the active equipment (fig. 3.1-36, fig. 3.1-37).

Thanks to "single-function" assemblies (assignment of just one task to each module) and the versatile modular structure, even unconventional arrangements can be set up from a pool of only 20 different modules. The modules are connected to each other with a standard interface that allows implementation of an extensive range of bay structures. Switchgear design with standardized modules and the scope of services ensure that all types of bay structures can be set up in a small area. The compact design enables the supply of complete bays that are fully assembled and tested at the factory, providing smooth and efficient installation and commissioning.

Fig. 3.1-37: 8DN9 switchgear for a rated voltage of 245 kV, with a 3-phase-enclosed passive busbar

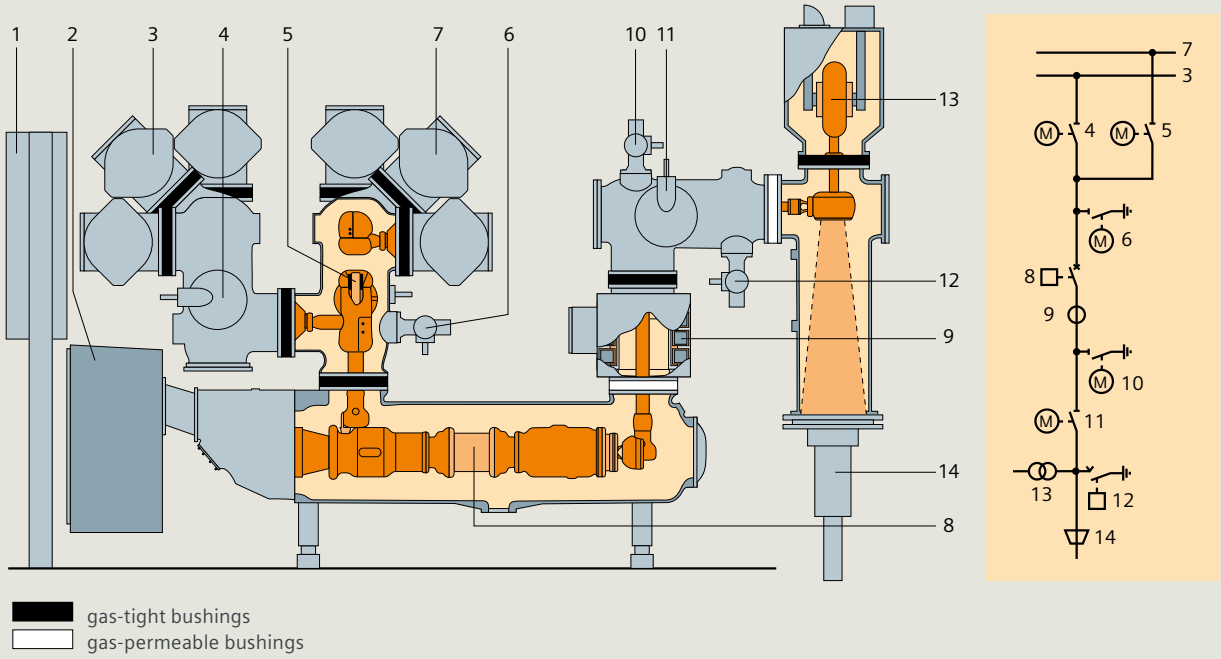

1 Integrated local control cubicle
2 Stored-energy spring mechanism with circuit-breaker control unit
3 Busbar I
4 Busbar disconnector I
5 Busbar disconnector II
6 Earthing switch
7 Busbar II
8 Circuit-breaker interrupter unit
9 Current transformer
10 Earthing switch
11 Outgoing disconnector
12 High-speed earthing switch
13 Voltage transformer
14 Cable sealing end

Fig. 3.1-38: 8DQ1 switchgear bay up to 420 kV

SF_6-insulated switchgear for up to 550 kV, type 8DQ1, is a 1-phase-enclosed switchgear system for high-power switching stations with individual enclosure of all modules.

The base unit for the switchgear is a horizontally arranged circuit-breaker on top of which the housing containing the disconnectors, earthing switches, current transformers, among others, are mounted. The busbar modules are partitioned off from the active equipment (fig. 3.1-38, fig. 3.1-39, fig. 3.1-40).

Other features of switchgear include:

- Circuit-breakers with single interrupter unit up to operating voltages of 420 kV (fig. 3.1-31), with two interrupter units up to operating voltages of 550 kV (fig. 3.1-39)
- Short-circuit breaking currents up to 63 kA within 2 cycles for 50 Hz / 60 Hz and 80 kA up to 420 kV
- Horizontal arrangement of the circuit-breakers in the lower section provides low center of gravity for the switchgear
- Utilization of the circuit-breaker transport frame as a supporting device for the entire bay
- Reduced length of sealing surfaces, thus decreasing the risk of leakage through use of only a few modules and equipment combinations in one enclosure.

Fig. 3.1-39: 8DQ1 switchgear for a rated voltage of 550 kV

Fig. 3.1-40: 8DQ1 switchgear for a rated voltage of 420 kV

Specification guide for metal-enclosed SF_6-insulated switchgear

Note: The points below are not considered exhaustive but are a selection of the important specifications. They cover the technical data applicable to metal-enclosed SF_6-insulated switchgear for switching and distributing power in cable and/or overhead-line systems and transformers. Key technical data are contained in the data sheet and in the single-line diagram (SLD) attached to the inquiry.

A general SLD and a sketch showing the general arrangement of the substation will be part of a proposal. Any switchgear quoted will be complete and will form a functional, safe and reliable system after installation, even if certain required parts have not been specifically included in the inquiry.

- Applicable standards
  All equipment is designed, built, tested and installed in accordance with the latest guidelines of the applicable IEC standards:
  - IEC 62271-1 "High-voltage switchgear and controlgear: Common specifications"
  - IEC 62271-203 "High-voltage switchgear and controlgear: Gas-insulated metal-enclosed switchgear for rated voltages above 52 kV"
  - IEC 62271-100 "High-voltage switchgear and controlgear: Alternating-current circuit-breakers"
  - IEC 62271-102 "High-voltage switchgear and controlgear: Alternating current disconnectors and earthing switches"
  - IEC 60044 "Instrument transformers: Current transformers"
  - National standards available on request.

Local conditions

The equipment is tested for indoor and outdoor applications. All the buyer has to provide is a flat concrete floor with the cutouts for cable installation – if required. The switchgear comes equipped with adjustable supports (feet). If steel support structures are required for the switchgear, Siemens can also provide these. For design purposes, the indoor temperatures should be between -5 °C and +40 °C, and outdoor temperatures should be between -30 °C and +40 °C (+50 °C). For parts to be installed outdoors (overhead-line connections), the conditions described in IEC 62271-203 must be observed. For the enclosures, aluminum or aluminum alloys are preferred.

A minimum of one-site installation will ensure maximum reliability. Up to six single or three double switchgear bays, fully assembled and tested, come as a single transport unit. Subassembly size is only restricted by transport requirements. Siemens can provide the enclosure in a material and thickness suited to withstand an internal arc and prevent burn-throughs or punctures within the first stage of protection, relating to the rated short-circuit current of the given GIS type.

All assemblies are designed to allow absorption of thermal expansion and contraction caused by varying temperatures. Adjustable metal bellow compensators are installed for this purpose. Density monitors with electrical contacts for at least two pressure levels are installed to allow gas monitoring in the enclosures. The circuit-breakers can be monitored with density gauges that are fitted in the circuit-breaker control units.

Siemens ensures that the pressure loss for each individual gas compartment – i.e., not just for the complete switchgear – will not exceed 0.1 % per year. Each gas-filled compartment comes equipped with static filters that are capable of absorbing any water vapor that penetrates into the switchgear for a period of at least 25 years. There are long intervals between required inspections, which keeps maintenance costs to a minimum. The first minor inspection is due after ten years. The first major inspection is usually required after more than 25 years of operation unless the permissible number of operations is reached before that date.

Arrangement and modules

Arrangement

The system consists of the enclosed 1-phase or 3-phase type. The assembly is made up of completely separate pressurized sections, and is thus designed to minimize any danger to the operating staff and reduce risk of damage to adjacent sections, even if problems with the equipment arise. Rupture diaphragms are provided to prevent the enclosures from bursting in an uncontrolled manner. Suitable deflectors provide protection for the operating personnel. For maximum operating reliability, internal relief devices are not installed because these would affect adjacent compartments. The modular design, complete segregation, arc-proof bushing, and plug-in connections allow speedy removal and replacement of any section with only minimal effects on the remaining pressurized switchgear.

Busbar module

The busbar modules of adjacent bays are connected with expansion joints, which absorb constructional tolerances and temperature-related movements in a longitudinal and transverse direction to the busbar. Axially guided sliding contacts between the conductors compensate temperature-related expansions in conductor length (fig. 3.1-41).

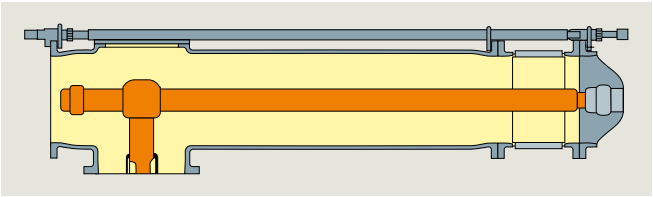

Fig. 3.1-41: All busbars of the enclosed 3-phase or the 1-phase (fig.) type are connected with plugs from one bay to the next

1
2
3
4
5
6
7
8
9
10
11
12
?

Circuit-breakers
(see section 4.1.1)

The circuit-breakers operate according to the dynamic self-compression principle. The number of interrupting units per phase depends on the circuit-breaker's performance. The arcing chambers and circuit-breaker contacts are freely accessible. The circuit-breaker is suitable for out-of-phase switching and is designed to minimize overvoltages. The specified arc interruption performance has to be consistent across the entire operating range, from line-charging currents to full short-circuit currents.

The circuit-breaker is designed to withstand at least 10 operations (depending on the voltage level) at full short-circuit rating. Opening the circuit-breaker for service or maintenance is not necessary. The maximum tolerance for phase displacement is 3 ms, which is the time between the first and the last pole's opening or closing. A standard station battery required for control and tripping may also be used for recharging the operating mechanism. The drive and the energy storage system are provided by a stored-energy spring mechanism that holds sufficient energy for all standard IEC close-open duty cycles. The control system provides alarm signals and internal interlocks, but inhibits tripping or closing of the circuit-breaker when the energy capacity in the energy storage system is insufficient or the SF_6 density within the circuit-breaker drops below the minimum permissible level.

Disconnectors

All disconnectors (isolators) are of the single-break type. DC motor operation (110, 125, 220, or 250 V), which is fully suited to remote operation, and a manual emergency operating mechanism are provided. Each motor operating mechanism is self-contained and equipped with auxiliary switches in addition to the mechanical indicators. The bearings are lubricated for life (fig. 3.1-42).

Earthing switches

Work-in-progress earthing switches are generally provided on either side of the circuit-breaker. Additional earthing switches may be used to earth busbar sections or other groups of the assembly. DC motor operation (110, 125, 220, or 250 V) that is fully suited for remote operation, and a manual emergency operating mechanism are provided. Each motor operating mechanism is self-contained and equipped with auxiliary position switches in addition to the mechanical indicators. The bearings are lubricated for life. Make-proof high-speed earthing switches are generally installed at the cable and overhead-line terminals. They are equipped with a rapid closing mechanism to provide short-circuit making capacity (fig. 3.1-43).

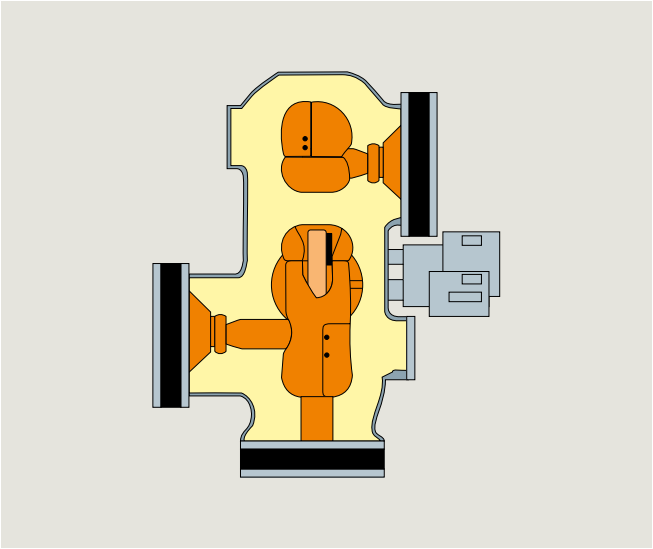

Fig. 3.1-42: Disconnectors: In the open position, disconnectors assure a dielectrically safe gap between system parts at different potentials; for example, the busbar disconnector isolates the feeders from the busbar. Cast-resin bushings keep the contact system in place, and the pressurized gas serves as the high-voltage insulating medium between live parts and the metal housing. The conductor terminals vary for different types of adjacent modules. Up to two earthing switches can be installed simultaneously

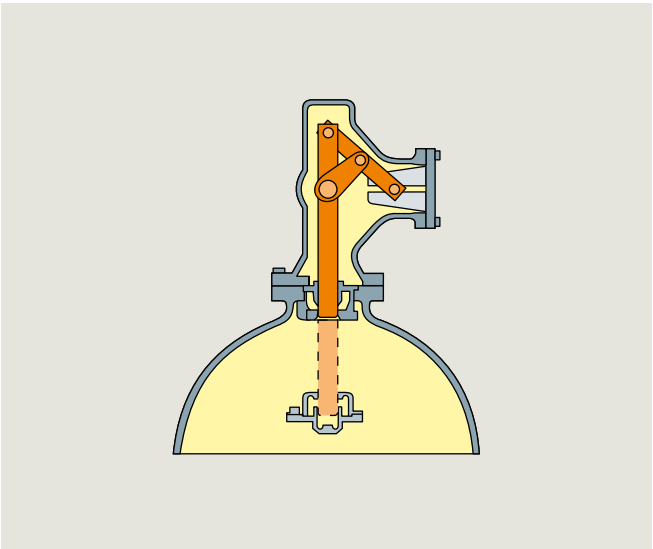

Fig. 3.1-43: Earthing switches: Earthing switches (work-in-progress earthing switches or busbar earthing switches, for example) are used for properly connecting de-energized live parts of the high-voltage system to the earthing system. On the outgoing side of the feeders, a make-proof version (high-speed) is frequently used to dissipate inductive and capacitive currents from parallel cables or overhead lines, or to reduce the risk to the GIS system in case of faulty connections. In the insulated design, they are also used for measuring purposes and for testing protection relays

Instrument transformers
Current transformers (CTs) encompass the dry-type design. Epoxy resin is not used for insulation purposes. The cores have the accuracies and burdens that are shown on the SLD. Voltage transformers are of the inductive type, with ratings of up to 200 VA.

Cable terminations
1-phase or 3-phase, SF_6-gas-insulated metal-enclosed cable end housings are provided. The cable manufacturer has to supply the stress cone and suitable sealings to prevent oil or gas from leaking into the SF_6 switchgear. Siemens will supply a mating connection piece to be fitted to the cable end. The cable end housing is suitable for oil-type, gas-pressure-type cables with plastic insulation (PE, PVC, etc.) as specified on the SLD or the data sheets. Additionally, devices for safely isolating a feeder cable and connecting a high-voltage test cable to the switchgear or cable can be provided (fig. 3.1-44).

Overhead-line terminations
The terminations for connecting overhead lines come complete with SF_6-to-air bushings, but without line clamps (fig. 3.1-45).

Transformer / reactor termination module
These terminations form the direct connection between the GIS and oil-insulated transformers or reactance coils. Standardized modules provide an economical way of matching them to various transformer dimensions (fig. 3.1-46 next page).

Control and monitoring
An electromechanical or solid-state interlocking control board is normally supplied for each switchgear bay. This fault-tolerant interlocking system prevents all operating malfunctions. Mimic diagrams and position indicators provide the operating personnel with clear operating instructions. Provisions for remote control are included. Gas compartments are constantly monitored by density monitors that provide alarm and blocking signals via contacts.

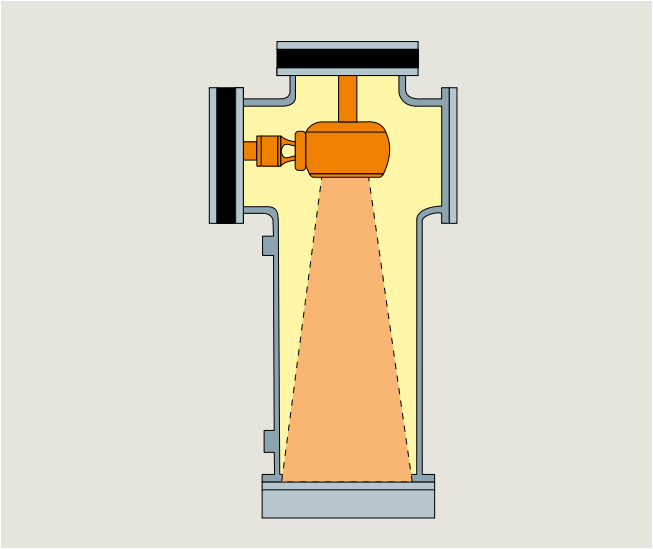

Fig. 3.1-44: Example for 1-phase cable termination: Cable termination modules conforming to IEC are available for connecting the switchgear to high-voltage cables. The standardized construction of these modules allows connection of various cross-sections and insulation types. Parallel cable connections for higher rated currents are also possible with the same module

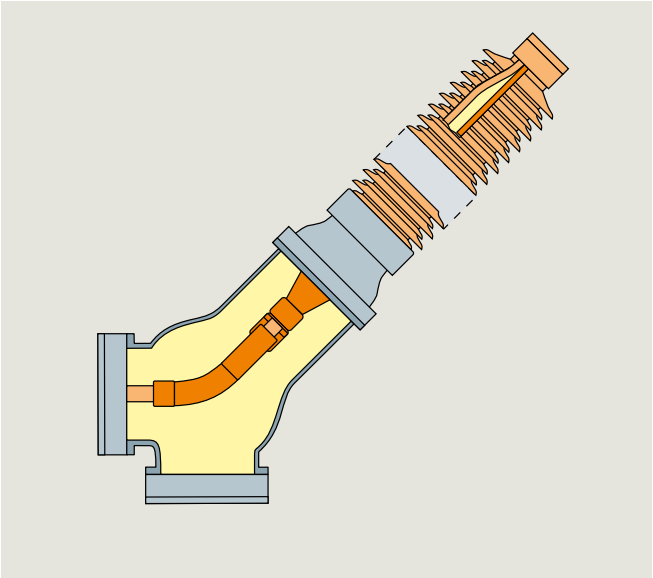

Fig. 3.1-45: Overhead-line terminations: High-voltage bushings are used for the SF_6-to-air transition. The bushings can be matched to specific requirements with regard to clearance and creepage distances. They are connected to the switchgear by means of angular-type modules of variable design

POWEREN.IR

Required tests

Partial discharge tests
All solid insulators fitted in the switchgear are subjected to a routine partial discharge test prior to installation. At 1.2 times the line-to-line voltage, no measurable discharge is allowed. This test ensures maximum safety in terms of insulator failure, a good long-term performance, and thus a very high degree of reliability.

Pressure tests
Each cast-aluminum enclosure of the switchgear is pressure-tested for at least twice the service pressure.

Leakage tests
Leakage tests performed on the subassemblies ensure that the flanges and cover faces are clean and that the guaranteed leakage rate is not exceeded.

Power frequency tests
Each assembly is subjected to power-frequency withstand tests, including sensitive partial discharge detection, to verify correct installation of the conductors, and to make sure that the insulator surfaces are clean and the switchgear as a whole is not subject to internal faults.

Additional technical data
Siemens will point out any dimensions, weights, or other switchgear data that may affect local conditions and handling of the equipment. Each quotation includes drawings showing the switchgear assembly.

Instructions
Detailed instruction manuals on the installation, operation and maintenance of the equipment are supplied, and all equipment is delivered by Siemens.

Scope of supply
Siemens supplies the following items for all GIS types and interfaces as specified:

- The switchgear bay, including circuit-breakers, disconnectors and earthing switches, instrument transformers, and busbar housings, as specified. For the different feeder types, the following limits apply:
  - Cable feeder:
    According to IEC 60859, the termination housing, conductor coupling, and connecting plate are part of the GIS delivery, while the cable stress cone with the matching flange is part of the cable supply (fig. 3.1-44).
  - Overhead-line feeder:
    The connecting stud at the SF_6-to-air bushing is supplied without the line clamp (fig. 3.1-45).

Fig. 3.1-46: Transformer termination

  - Transformer feeder:
    Siemens supplies the connecting flange at the switchgear bay and the connecting bus ducts to the transformer, including any expansion joints. The SF_6-to-oil bushings plus terminal enclosures are part of the transformer delivery unless otherwise agreed (fig. 3.1-46).
    Note: This point always requires close coordination between the switchgear manufacturer and the transformer supplier.
- Each feeder bay is equipped with earthing pads. The local earthing network and the connections to the switchgear are included in the installation contractor's scope.
- Initial SF_6-gas filling for the entire switchgear supplied by Siemens is included. Siemens will also supply all gas interconnections from the switchgear bay to the integral gas service and monitoring panel.
- Terminals and circuit protection for auxiliary drives and control power are provided with the equipment. Feeder circuits and cables, as well as the pertaining installation material will be supplied by the installation contractor.
- The local control, monitoring and interlocking panels are supplied for each circuit-breaker bay to form fully operational systems. Terminals for remote monitoring and control are also provided.
- Siemens will supply the above ground mechanical support structures; embedded steel and foundation work is part of the installation contractor's scope.

For further information:
8VM1
siemens.com/hv-gis/8vm1
8DN8
siemens.com/energy/gas-insulated-switchgear/8dn8
Gas-insulated switchgear
siemens.com/energy/gas-insulated-switchgear

3.2 Medium-voltage substations and switchgear

3.2.1 Introduction

According to international rules, there are only two voltage levels:

- Low voltage: up to and including 1 kV AC (or 1,500 V DC)
- High voltage: above 1 kV AC (or 1,500 V DC)

Most electrical appliances used in household, commercial and industrial applications work with low-voltage. High-voltage is used not only to transmit electrical energy over very large distances, but also for regional distribution to the load centers via fine branches. However, because different high-voltage levels are used for transmission and regional distribution, and because the tasks and requirements of the switchgear and substations are also very different, the term "medium-voltage" has come to be used for the voltages required for regional power distribution that are part of the high-voltage range from 1 kV AC up to and including 52 kV AC (fig. 3.2-2). Most operating voltages in medium-voltage systems are in the 3 kV AC to 40.5 kV AC range.

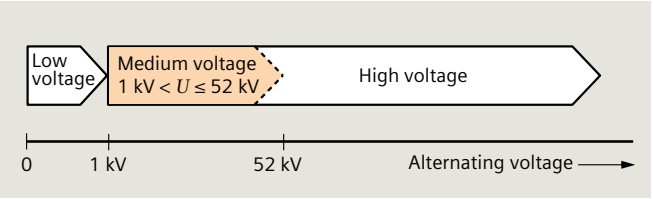

Fig. 3.2-2: Voltage definitions

The electrical transmission and distribution systems not only connect power plants and electricity consumers, but also, with their "meshed systems," form a supraregional backbone with reserves for reliable supply and for the compensation of load differences. High operating voltages (and therefore low currents) are preferred for power transmission in order to minimize losses. The voltage is not transformed to the usual values of the low-voltage system until it reaches the load centers close to the consumer.

In public power supplies, the majority of medium-voltage systems are operated in the 10 kV to 30 kV range (operating voltage). The values vary greatly from country to country, depending on the historical development of technology and the local conditions.

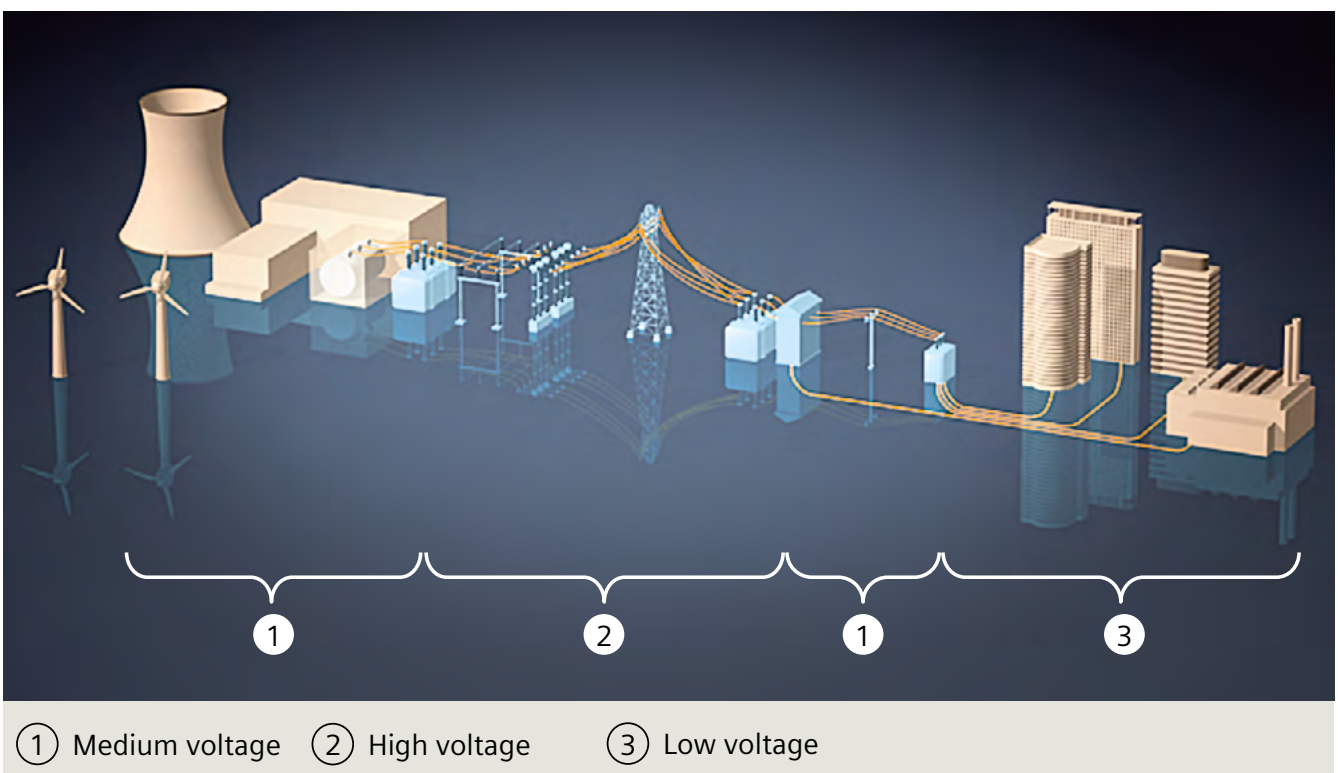

Fig. 3.2-1: Voltage levels from the power plant to the consumer

Medium-voltage equipment

Apart from the public supply, there are still other voltages fulfilling the needs of consumers in industrial plants with medium-voltage systems; in most cases, the operating voltages of the motors installed are decisive. Operating voltages between 3 kV and 15 kV are frequently found in industrial supply systems.

In power supply and distribution systems, medium-voltage equipment is available in (fig. 3.2-3):

- Power plants, for generators and station supply systems
- Transformer substations of the primary distribution level (public supply systems or systems of large industrial companies), in which power supplied from the high-voltage system is transformed to medium-voltage.
- Local supply, transformer or customer transfer substations for large consumers (secondary distribution level), in which the power is transformed from medium to low-voltage and distributed to the consumer.

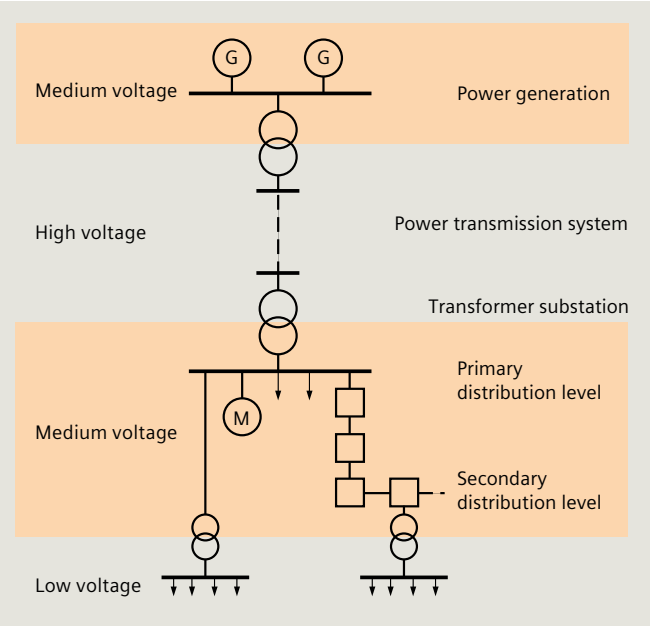

Fig. 3.2-3: Medium voltage in the power supply and distribution system

3.2.2 Basics of switching devices

What are switching devices?

Switching devices are devices used to close (make) or open (break) electrical circuits. The following stress can occur during making and breaking:

- No-load switching
- Breaking of operating currents
- Breaking of overload currents
- Breaking of short-circuit currents.

What can the different switching devices do?

- **Circuit-breakers:** Make and break all currents within the scope of their ratings, from small inductive and capacitive load currents up to the full short-circuit current, and this under all fault conditions in the power supply system, such as earth faults, phase opposition, and so on.
- **Switches:** Switch currents up to their rated normal current and make on existing short-circuits (up to their rated short-circuit making current).
- **Disconnectors (isolators):** Used for no-load closing and opening operations. Their function is to "isolate" downstream devices so they can be worked on.
- **Three-position disconnectors:** Combine the functions of disconnecting and earthing in one device. Three-position disconnectors are typical for gas-insulated switchgear.
- **Switch-disconnectors (load-break switches):** The combination of a switch and a disconnector, or a switch with isolating distance.
- **Contactors:** Load breaking devices with a limited short-circuit making or breaking capacity. They are used for high switching rates.
- **Earthing switches:** To earth isolated circuits.
- **Make-proof earthing switches (earthing switches with making capacity):** Are used for the safe earthing of circuits, even if voltage is present, that is, also in the event that the circuit to be earthed was accidentally not isolated.
- **Fuses:** Consist of a fuse-base and a fuse-link. With the fuse-base, an isolating distance can be established when the fuse-link is pulled out in de-energized condition (like in a disconnector). The fuse-link is used for one single breaking of a short-circuit current.
- **Surge arresters:** To discharge loads caused by lightning strikes (external overvoltages) or switching operations and earth faults (internal overvoltages). They protect the connected equipment against impermissibly high-voltages.

1
2
3
4
5
6
7
8
9
10
11
12
?

Selection of switching devices

Switching devices are selected both according to their ratings and according to the switching duties to be performed, which also includes the switching rates. The following tables illustrate these selection criteria: table 3.2-1, shows the selection according to ratings. Table 3.2-2 through table 3.2-6, see next page, show the endurance classes for the devices.

Selection according to ratings

The system conditions, that is, the properties of the primary circuit, determine the required parameters. The most important of these are:

- *Rated voltage:*
  The upper limit of the system voltage the device is designed for. Because all high-voltage switching devices are zero-current interrupters – except for some fuses – the system voltage is the most important dimensioning criterion. It determines the dielectric stress of the switching device by means of the transient recovery voltage and the recovery voltage, especially while switching off.
- *Rated insulation level:*
  The dielectric strength from phase to earth, between phases and across the open contact gap, or across the isolating distance. The dielectric strength is the capability of an electrical component to withstand all voltages with a specific time sequence up to the magnitude of the corresponding withstand voltages. These can be operating voltages or higher-frequency voltages caused by switching operations, earth faults (internal overvoltages) or lightning strikes (external overvoltages). The dielectric strength is verified by a lightning impulse withstand voltage test with the standard impulse wave of 1.2/50 µs and a power-frequency withstand voltage test (50 Hz/1 min)
- Rated normal current:
  The current that the main circuit of a device can continuously carry under defined conditions. The temperature increase of components – especially contacts – must not exceed defined values. Permissible temperature increases always refer to the ambient air temperature. If a device is mounted in an enclosure, it may be advisable to load it below its full rated current, depending on the quality of heat dissipation.
- Rated peak withstand current:
  The peak value of the major loop of the short-circuit current during a compensation process after the beginning of the current flow, which the device can carry in closed state. It is a measure for the electrodynamic (mechanical) load of an electrical component. For devices with full making capacity, this value is not relevant (see the next item in this list).
- Rated short-circuit making current:
  The peak value of the making current in case of short circuit at the terminals of the switching device. This stress is greater than that of the rated peak withstand current, because dynamic forces may work against the contact movement.
- Rated breaking current:
  The load breaking current in normal operation. For devices with full breaking capacity and without a critical current range, this value is not relevant (see the previous item in this list).
- Rated short-circuit breaking current:
  The root-mean-square value of the breaking current in case of short circuit at the terminals of the switching device.

Device	Withstand capability, rated ...				Switching capacity, rated ...		
	insulation level	voltage	normal current	peak withstand current	breaking current	short-circuit breaking current	short-circuit making current
Circuit-breaker	x	x	x		x	x	x
Switch(-disconnector)	x	x	x	x			x
Disconnector	x		x	x			
Earthing switch	x			x			
Make-proof earthing switch	x	x					x
Contactor	x	x	x	x	x	x [1]	x [1]
Fuse-link		x	x			x	
Fuse-base	x		x				
Surge arrester*	x [2]	x [3]		x [4]		x [5]	
Current limiting reactor	x		x	x			
Bushing	x		x	x [6]			
Post insulator (insulator)	x			x [6]			

x Selection parameter
[1] Limited short-circuit making and breaking capacity
[2] Applicable as selection parameter in special cases only, e.g., for exceptional pollution layer
[3] For surge arresters with spark gap: rated voltage
[4] Rated discharge current for surge arresters
[5] For surge arresters: short-circuit strength in case of overload
[6] For bushings and insulators: Minimum failing loads for tension, bending and torsion
* See also section 3.3

(Parameters of the secondary equipment for operating mechanisms, control and monitoring are not taken into consideration in this table.)

Table 3.2-1: Device selection according to data of the primary circuit

1
2
3
4
5
6
7
8
9
10
11
12
?

Selection according to endurance and switching rates

If several devices satisfy the electrical requirements and no additional criteria have to be taken into account, the required switching rate can be used as an additional selection criterion. Table 3.2-1 through table 3.2-6 show the endurance of the switching devices, providing a recommendation for their appropriate use. The respective device standards distinguish between classes of mechanical (M) and electrical (E) endurance, whereby they can also be used together on the same switching device; for example, a switching device can have both mechanical class M1 and electrical class E3.

- Switches:
  Standard IEC 62271-103 / VDE 0671-103 only specifies classes for the so-called general-purpose switches. There are also "special switches" and "switches for limited applications."*
  - General-purpose switches:
    General-purpose switches must be able to break different types of operating currents (load currents, ring currents, currents of unloaded transformers, charging currents of unloaded cables and overhead-lines), as well as to make on short-circuit currents. General-purpose switches that are intended for use in systems with isolated neutral or with earth earth-fault compensation, must also be able to switch under earth-fault conditions. The versatility is mirrored in the very exact specifications for the E classes.
  - SF_6 switches:
    SF_6 switches are appropriate when the switching rate is not more than once a month. These switches are usually classified as E3 with regard to their electrical endurance.
  - Air-break or hard-gas switches:
    Air-break or hard-gas switches are appropriate when the switching rate is not more than once a year. These switches are simpler and usually belong to the E1 class. There are also E2 versions available.
  - Vacuum switches:
    The switching capacity of vacuum switches is significantly higher than that of the M2/E3 classes. They are used for special tasks – mostly in industrial power supply systems – or when the switching rate is at least once a week.

Class		Operating cycles	Description	
M	M1	1,000	Mechanical endurance	
	M2	5,000	Increased mechanical endurance	
E	E1	$10 \times I_{load}$ $10 \times I_{load}$ $2 \times I_{ma}$	$20 \times 0.05 \times I_{load}$ $10 \times I_{cc}$ 10×0.2 to $0.4 \times I_{cc}$ $10 \times I_{lc}$ $10 \times I_{ef1}$ $10 \times I_{ef2}$	Test currents: (old) I_{load} active load-breaking current I_1 I_{loo} closed-loop breaking current I_{2a} I_{cc} cable-charging breaking current I_{4a} I_{lc} line-charging breaking current I_{4b} I_{sb} capacitor bank breaking current I_{4c} I_{bb} back-to-back capacitor bank breaking current I_{4d} I_{ef1} earth fault breaking current I_{6a} I_{ef2} cable- and line-charging breaking current under earth fault conditions I_{6b} I_{ma} short-circuit making current I_{ma}
	E2	$30 \times I_{load}$ $20 \times I_{load}$ $3 \times I_{ma}$		
	E3	$100 \times I_{load}$ $20 \times I_{load}$ $5 \times I_{ma}$		
C	C1	$10 \times I_{cc}$ $10 \times I_{lc}$ $10 \times I_{sc}$ $10 \times I_{bb}$ additionally each $10 \times 0,1$ ... $0,4 \times I_{cc}$, I_{sb}, I_{bb}	Restrikes permitted (number not defined)	
	C2		No restrikes	

Table 3.2-2: Classes for switches

Class		Operating cycles	Description
M	M0	1,000	For general requirements
	M1	2,000	Extended mechanical endurance
	M2	10,000	

Table 3.2-3: Endurance classes for disconnectors

Class		Operating cycles	Description	
E	E0	$0 \times I_{ma}$	No short-circuit making capacity	For general requirements
	E1	$2 \times I_{ma}$	Short-circuit making capacity	
	E2	$5 \times I_{ma}$		Reduced maintenance required

Table 3.2-4: Endurance classes for earthing switches

Class		Description		
C	C0	24 × O per 10...40% I_{lc}, I_{cc}, I_{bc} 24 × CO per 10...40% I_{lc}, I_{cc}, I_{bc}	Not explicitely defined	≤ 1 restrike per interruption
	C1		Low probability of restrikes*	≤ 5 cummulated restrikes on test duties BC1 and BC2
	C2	24 × O per 10...40% I_{lc}, I_{cc}, I_{bc} 128 × CO per 10...40% I_{lc}, I_{cc}, I_{bc}	Very low probability of restrikes**	No restrikes*

* Class C2 is recommended for capacitor banks

Table 3.2-5: Classes for contactors

* *Disconnectors up to 52 kV may only switch negligible currents up to 500 mA (e.g., voltage transformer), or larger currents only when there is an insignificant voltage difference (e.g., during busbar transfer when the bus coupler is closed).*

1
2
3
4
5
6
7
8
9
10
11
12
?

- Circuit-breakers:
  Whereas the number of mechanical operating cycles is specifically stated in the M classes, the circuit-breaker standard IEC 62271-100/VDE 0671-100 does not define the electrical endurance of the E classes by specific numbers of operating cycles; the standard remains very vague on this.
  The test duties of the short-circuit type tests provide an orientation as to what is meant by "normal electrical endurance" and "extended electrical endurance." The number of make and break operations (**C**lose, **O**pen) is specified in table 3.2-6.
  Modern vacuum circuit-breakers can generally make and break the rated normal current up to the number of mechanical operating cycles.
  The switching rate is not a determining selection criterion, because circuit-breakers are always used where short-circuit breaking capacity is required to protect equipment.
- Disconnectors:
  Disconnectors do not have any switching capacity (switches for limited applications must only control some of the switching duties of a general-purpose switch). Switches for special applications are provided for switching duties such as switching of single capacitor banks, paralleling of capacitor banks, switching of ring circuits formed by transformers connected in parallel, or switching of motors in normal and locked condition. Therefore, classes are only specified for the number of mechanical operating cycles.
- Earthing switches:
  With earthing switches, the E classes designate the short-circuit making capacity (earthing on applied voltage). E0 corresponds to a normal earthing switch; switches of the E1 and E2 classes are also-called make-proof or high-speed earthing switches.
  The standard does not specify how often an earthing switch can be actuated purely mechanically; there are no M classes for these switches.
- Contactors:
  The standard has not specified any endurance classes for contactors yet. Commonly used contactors today have a mechanical and electrical endurance in the range of 250,000 to 1,000,000 operating cycles. They are used wherever switching operations are performed very frequently, e.g., more than once per hour.
  Regarding capacitor applications IEC 62271-106 introduced classes for capacitice current breaking. If contactors are used for capacitor banks it is recommended to only install class C2 contactors.

Class		Description		
M	M1	2,000 operating cycles	Normal mechanical endurance	
	M2	10,000 operating cycles	Extended mechanical endurance, low maintenance	
E	E1	2 × C and 3 × O with 10 %, 30 %, 60 % and 100 % I_{sc}	Normal electrical endurance (not covered by E2)	
	E2	2 × C and 3 × O with 10 %, 30 %, 60 % and 100 % I_{sc}	Without auto-reclosing duty	Extended electrical endurance without main-tenance of interrupting parts of the main circuit
		26 × C 130 × O 10 % I_{sc} 26 × C 130 × O 30 % I_{sc} 4 × C 8 × O 60 % I_{sc} 4 × C 6 × O 100 % I_{sc}	With auto-reclosing duty	
C	C1	24 × O per 10...40% I_{lc}, I_{cc}, I_{bc} 24 × CO per 10...40% I_{lc}, I_{cc}, I_{bc}	Low probability of restrikes*	Restrike-free breaking operations at 2 of 3 test duties
	C2	24 × O per 10...40% I_{lc}, I_{cc}, I_{bc} 128 × CO per 10...40% I_{lc}, I_{cc}, I_{bc}	Very low probability of restrikes**	
S	S1	Circuit-breaker used in a cable system		
	S2	Circuit-breaker used in a line system or in a cable system with direct connection (without cable) to overhead lines		

* Class C1 is recommendable for infrequent switching of transmission lines and cables
** Class C2 is recommended for capacitor banks and frequent switching of transmission lines and cables

Table 3.2-6: Classes for circuit-breakers

3.2.3 Requirements of medium-voltage switchgear

The major influences and stress values that a switchgear assembly is subjected to result from the task and its rank in the distribution system. These influencing factors and stresses determine the selection parameters and ratings of the switchgear (fig. 3.2-4).

Influences and stress values

System voltage
The system voltage determines the rated voltage of the switchgear, switching devices and other installed components. The maximum system voltage at the upper tolerance limit is the deciding factor.

Assigned configuration criteria for switchgear
- Rated voltage U_r
- Rated insulation level U_d; U_p
- Rated primary voltage of voltage transformers U_{pr}.

Short-circuit current
The short-circuit current is characterized by the electrical values of peak withstand current I_p (peak value of the initial symmetrical short-circuit current) and sustained short-circuit current I_k. The required short-circuit current level in the system is predetermined by the dynamic response of the loads and the power quality to be maintained, and determines the making and breaking capacity and the withstand capability of the switching devices and the switchgear (table 3.2-7).

Important note: The ratio of peak current to sustained short-circuit current in the system can be significantly larger than the standardized factor Ip/Ik = 2.5 (50 Hz) used for the construction of the switching devices and the switchgear. A possible cause, for example, are motors that feed power back to the system when a short circuit occurs, thus increasing the peak current significantly.

Normal current and load flow
The normal current refers to current paths of the incoming feeders, busbar(s) and outgoing consumer feeders. Because of the spatial arrangement of the panels, the current is also distributed, and therefore there may be different rated current values next to one another along a conducting path; different values for busbars and feeders are typical.

Reserves must be planned when dimensioning the switchgear:
- In accordance with the ambient air temperature
- For planned overloadFor temporary overload during faults.

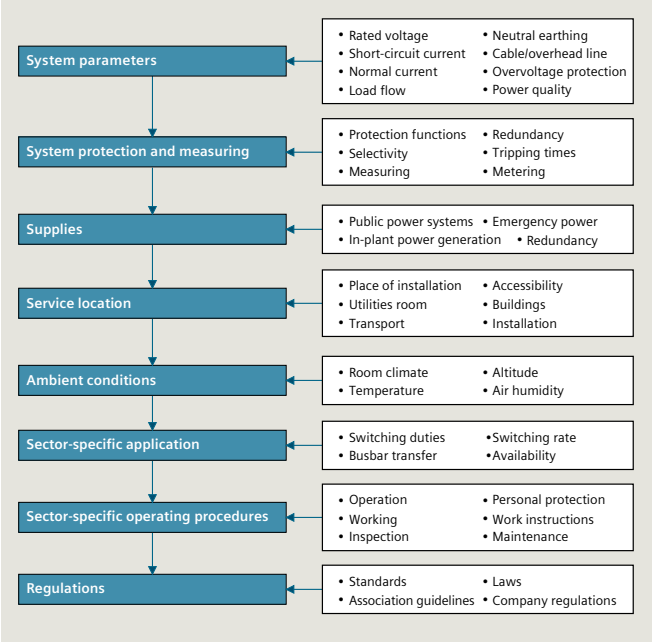

Fig. 3.2-4: Influencing factors and stresses on the switchgear

Assigned configuration criteria for switchgear	
Main and earthing circuits	– Rated peak withstand current I_p – Rated short-time withstand current I_k
Switching devices	– Rated short-circuit making current I_{ma} – Rated short-circuit breaking current I_{sc}
Current transformers	– Rated peak withstand current $I_{k\text{-}dyn}$ – Rated short-time thermal current I_{th}

Table 3.2-7: Configuration criteria for short-circuit current

Large cable cross-sections or several parallel cables must be connected for high normal currents; the panel connection must be designed accordingly.

Assigned configuration criteria for switchgear
- Rated current of busbar(s) and feeders
- Number of cables per phase in the panel (parallel cables)
- Current transformer ratings.

1
2
3
4
5
6
7
8
9
10
11
12
?

Category		When an accessible compartment in a panel is opened, ...
LSC 1		other panels must be shut down, i.e., at least one more
LSC 2	LSC 2	only the connection compartment is accessible, while busbar and other panels remain energized
	LSC 2A	any accessible compartment – except the busbar – can be open while busbar and other panels remain energized
	LSC 2B	the connection (cable) compartment can remain energized while any other accessible compartment can be open – except busbar and connections – and busbar and other panels remain energized

Table 3.2-8: Loss of service continuity categories

Type of accessibility to a compartment	Access features	Type of construction
Interlock-controlled	Opening for normal operation and maintenance, e.g., fuse replacement	Access is controlled by the construction of the switchgear, i.e., integrated interlocks prevent impermissible opening.
Procedure-based	Opening for normal operation or maintenance, e.g., fuse replacement	Access control via a suitable procedure (work instruction of the operator) combined with a locking device (lock).
Tool-based	Opening not for normal operation and maintenance, e.g., cable testing	Access only with tool for opening; special access procedure (instruction of the operator).
Not accessible	Opening not possible or not intended for operator; opening can destroy the compartment. This applies generally to the gas-filled compartments of gas-insulated switchgear. As the switchgear is maintenance-free and climate-independent, access is neither required nor possible.	

Table 3.2-9: Accessibility of compartments

The notation IAC A FLR contains the abbreviations for the following values:	
IAC	Internal Arc Classification
A	Distance between the indicators 300 mm, i.e., installation in rooms with access for authorized personnel; closed electrical service location.
FLR	Access from the front (F), from the sides (L = Lateral) and from the rear (R).
I	Test current = Rated short-circuit breaking current (in kA)
t	Arc duration (in s)

Table 3.2-10: Internal arc classification according to IEC 62271-200

3.2.4 Medium-voltage switchgear

Distribution level	Insulation	Type of construction	Loss of service continuity	Partition class	Internal arc classification*	Switchgear type	Busbar system	Rated voltage (kV)	Rated short-time withstand current (kA) 1 s	3 s	Rated current, busbar (A)	Rated current, feeder (A)
Primary	Gas-insulated	Extendable	LSC 2	PM	IAC A FLR 31.5 kA, 1 s	**NXPLUS C**	Single	15	31.5	31.5	2,500	2,500
								24.0	25	25	2,500	2,000
			LSC 2	PM	IAC A FLR 25 kA, 1 s	**NXPLUS C**	Double	24	25	25	2,500	1,250
			LSC 2	PM	IAC A FL 25 kA, 1 s ** IAC A FLR 25 kA, 1 s ***	**NXPLUS C Wind**	Single	36	25	20	1,000	800 / 1,000
			LSC 2	PM	IAC A FLR 31.5 kA, 1 s	**NXPLUS**	Single	40.5	31.5	31.5	2,500	2,500
			LSC 2	PM	IAC A FLR 31.5 kA, 1 s	**NXPLUS**	Double	36	31.5	31.5	2,500	2,500
			LSC 2	PM	IAC A FLR 40 kA, 1 s	**8DA10**	Single	40.5	40	40	5,000	2,500
			LSC 2	PM	IAC A FLR 40 kA, 1 s	**8DB10**	Double	40.5	40	40	5,000	2,500
	Air-insulated	Extendable	LSC 2B	PM	IAC A FLR 50 kA, 1 s	**NXAIR**	Single	17.5	50	50	4,000	4,000
							Double	17.5	50	50	4,000	4,000
					IAC A FLR 25 kA, 1 s		Single	24	25	25	2,500	2,500
							Double	24	25	25	2,500	2,500
			LSC 2B	PM	IAC A FLR 31.5 kA, 1 s	**NXAIR S**	Single	40.5	31.5	31.5	3,150	2,500
			LSC 2A	PM	IAC A FLR 25 kA, 1 s	**8BT1**	Single	24	25	25	2,000	2,000
			LSC 2B	PM	IAC A FLR 31.5 kA, 1 s	**8BT2**	Single	36	31.5	31.5	3,150	3,150
Secondary	Gas-insulated	Non-extendable	LSC 2	PM	IAC A FL 21 kA, 1 s ** IAC A FLR 21 kA, 1 s ***	**8DJH Compact (panel blocks)**	Single	17.5	25	20	630	200 **** / 250 / 400 / 630
								24	20	20	630	200 **** / 250 / 400 / 630
		Extendable	LSC 2	PM	IAC A FL 21 kA, 1 s ** IAC A FLR 21 kA, 1 s ***	**8DJH (single panel/ block type)**	Single	17.5	25	20	630	200 **** / 250 / 400 / 630
								24	20	20	630	200 **** / 250 / 400 / 630
		Extendable	LSC 2	PM	IAC A FL 20 kA, 1 s ** IAC A FLR 20 kA, 1 s ***	**8DJH 36**	Single	36	20	20	630	200 **** / 630
	Air-insulated	Extendable	LSC 2	PM	IAC A FLR 21 kA, 1 s	**SIMOSEC**	Single	17.5	25	21	1,250	1,250
								24	20	20	1,250	1,250

* Maximum possible IAC classification ** Wall-standig arrangement *** Free-standig arrangement **** Depending on HV HRC fuse-link

Table 3.2-11: Overview of Siemens medium-voltage switchgear

NXAIR ≤ 17.5 kV

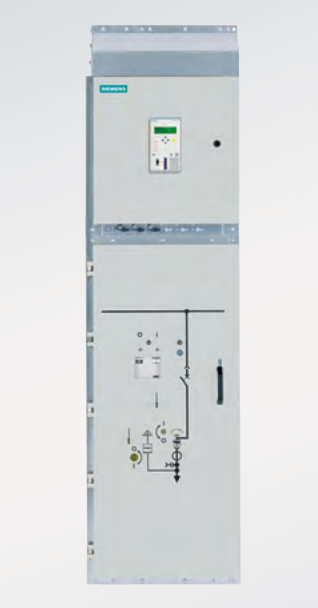

Fig. 3.2-5: NXAIR panel

Rated				
Voltage	kV	7.2	12	17.5
Frequency	Hz	50/60	50/60	50/60
Short-duration power-frequency withstand voltage (phase/phase, phase/earth)	kV	20*	28*	38
Lightning impulse withstand voltage (phase/phase, phase/earth)	kV	60	75	95
Short-circuit breaking current	max. kA	50	50	50
Short-time withstand current, 3 s	max. kA	50	50	50
Short-circuit making current	max. kA	125/130**	125/130**	125/130**
Peak withstand current	max. kA	125/130**	125/130**	125/130**
Normal current for busbar	max. A	4,000	4,000	4,000
Normal current for feeders:				
Circuit-breaker panel	max. A	4,000	4,000	4,000
Contactor panel	max. A	400***	400***	–
Disconnecting panel	max. A	4,000	4,000	4,000
Bus sectionalizer	max. A	4,000	4,000	4,000
Busbar connection panel	max. A	4,000	4,000	4,000

* 32 kV at 7.2 kV and 42 kV at 12 kV optional for GOST standard.
** Values for 50 Hz: 125 kA; for 60 Hz: 130 kA.
*** Current values dependent on HV HRC fuses. Lightning impulse withstand voltage across open contact gap of contactor: 40 kV at 7.2 kV, 60 kV at 12 kV.

Table 3.2-12: Technical data of NXAIR

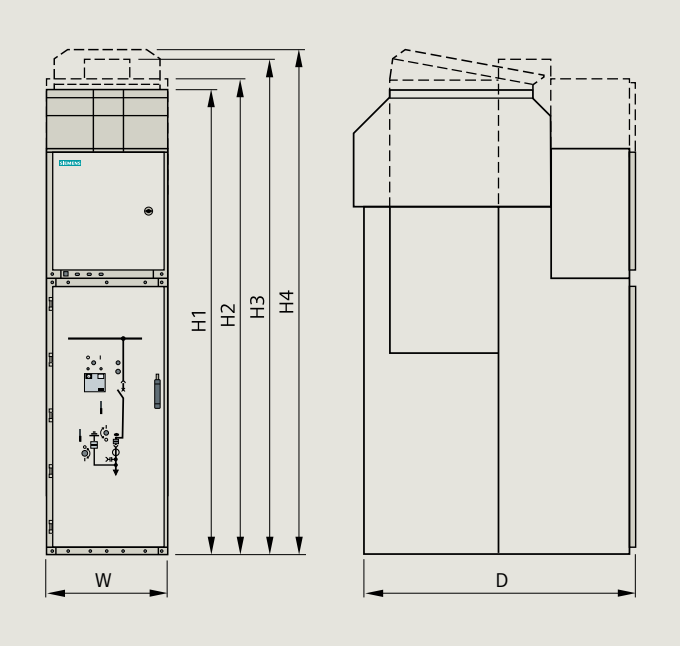

Dimensions				in mm
Width	W	Circuit-breaker panel	≤ 1,000 A	600*
			1,250/2,500/3,150 A	800
			2,500 A/3,150 A/4,000 A	1,000
		Contactor panel	≤ 400 A	435/600
		Disconnecting panel	1,250 A	800
			2,500 A/3,150 A/4,000 A	1,000
		Bus sectionalizer	1,250 A	2 × 800
			2,500 A/3,150 A/4,000 A	2 × 1,000
		Metering panel		800
		Busbar connection panel	≤ 4,000 A	800/1,000
Height	H1	With standard low-voltage compartment, natural ventilation		2,300
Height	H2	With high low-voltage compartment or additional compartment for busbar components		2,350
Height	H3	With forced ventilation for 4,000 A		2,450
Height	H4	With optional internal arc absorber		2,500
Depth	D	Single busbar, all panel types (except contactor panel)	≤ 31.5 kA	1,350
			40 kA/50 kA	1,500/1,650
		Contactor panel	≤ 31.5 kA	1,400
			40 kA/50 kA	1,500/1,650

* ≤ 31.5 kA

Fig. 3.2-6: Dimensions of NXAIR

Performance features

The air-insulated, metal-clad switchgear type NXAIR is an innovation in the switchgear field for the distribution and process level up to 17.5 kV, 50 kA, 4,000 A.

- Type-tested, IEC 62271-200, metal-clad, loss of service continuity category: LSC 2B; partition class: PM; internal arc classification: IAC A FLR ≤ 50 kA 1 s
- Evidence of the making and breaking capacity for the circuit-breakers and the make-proof earthing switches inside the panel
- Insulating medium air is always available
- Single busbar, double busbar (back-to-back, face-to-face)
- Withdrawable vacuum circuit-breaker
- Withdrawable vacuum contactor
- Platform concept worldwide, local manufacturing presence
- Use of standardized devices
- Maximum security of operation by self-explaining operating logic
- Maintenance interval ≥ 10 years.

1
2
3
4
5
6
7
8
9
10
11
12
?

NXAIR 24 kV

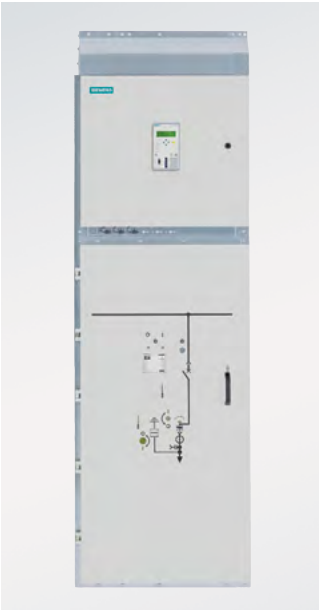

Fig. 3.2-7: NXAIR, 24 kV panel

Rated		
Voltage	kV	24
Frequency	Hz	50/60
Short-duration power-frequency withstand voltage (phase/phase, phase/earth)	kV	50 *
Lightning impulse withstand voltage (phase/phase, phase/earth)	kV	125
Short-circuit breaking current	max. kA	25
Short-time withstand current, 3 s	max. kA	25
Short-circuit making current	max. kA	63/65 **
Peak withstand current	max. kA	63/65 **
Normal current for busbar	max. A	2,500
Normal current for feeders: Circuit-breaker panel Disconnecting panel Bus sectionalizer	 max. A max. A max. A	 2,500 2,500 2,500
* 65 kV optional for GOST standard ** Values for 50 Hz: 63 kA; for 60 Hz: 65 kA.		

Table 3.2-13: Technical data of NXAIR, 24 kV

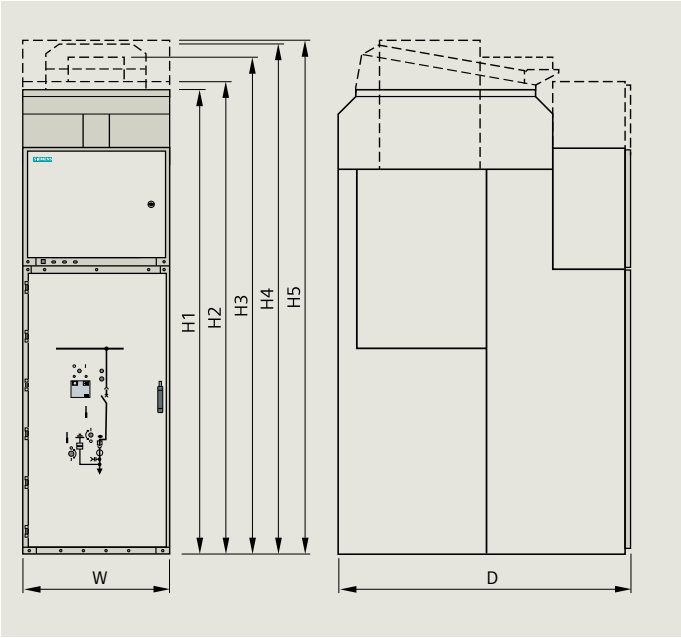

Dimensions				in mm
Width	W	Circuit-breaker panel	≤ 1,250 A 2,500 A	800 1,000
		Disconnecting panel	≤ 1,250 A 2,500 A	800 1,000
		Bus sectionalizer	≤ 1,250 A 1,600 A / 2,000 A / 2,500 A	2 × 800 2 × 1,000
		Metering panel		800
Height	H1	With standard low-voltage compartment		2,510
Height	H2	With high low-voltage compartment		2,550
Height	H3	With natural ventilation		2,680
Height	H4	With optional internal arc absorber		2,750
Height	H5	With additional compartment for busbar components		2,770
Depth	D	Single busbar Double busbar (back-to-back)		1,600 3,350

Fig. 3.2-8: Dimensions of NXAIR, 24 kV

Performance features

The air-insulated, metal-clad switchgear type NXAIR, 24 kV is the resulting further development of the NXAIR family for use in the distribution and process level up to 24 kV, 25 kA, 2,500 A.

- Type-tested, IEC 62271-200, metal-clad, loss of service continuity category: LSC 2B; partition class: PM; internal arc classification: IAC A FLR ≤ 25 kA 1s
- Evidence of the making and breaking capacity for the circuit-breakers and the make-proof earthing switches inside the panel
- Single busbar, double busbar (back-to-back, face-to-face)
- Insulating medium air is always available
- Withdrawable vacuum circuit-breaker
- Platform concept worldwide, local manufacturing presence
- Use of standardized devices
- Maximum security of operation by self-explaining operating logic
- Maintenance interval ≥ 10 years.

1
2
3
4
5
6
7
8
9
10
11
12
?

NXAIR S

Fig. 3.2-9: NXAIR S panel

Rated		
Voltage	kV	40.5
Frequency	Hz	50/60
Short-duration power-frequency withstand voltage (phase/phase, phase/earth)	kV	185
Lightning impulse withstand voltage (phase/phase, phase/earth)	kV	95
Short-circuit breaking current	max. kA	31.5
Short-time withstand current, 4 s	max. kA	31.5
Short-circuit making current	max. kA	80/82
Peak withstand current	max. kA	80/82
Normal current for busbar	max. A	3,150
Normal current for feeders:		
Circuit-breaker panel	max. A	2,500
Disconnecting panel	max. A	2,500
Bus sectionalizer	max. A	2,500

Table 3.2-14: Technical data of NXAIR S

Performance features

The air-insulated, metal-clad switchgear type NXAIR S is based on the construction principles of the NXAIR family and designed for use in the distribution and process level up to 40.5 kV, 31.5 kA, 3,150 A.

- Type-tested, IEC 62271-200, metal-clad, loss of service continuity category: LSC 2B; partition class: PM; internal arc classification: IAC A FLR ≤ 31.5 kA 1 s
- Insulating medium air is always available
- Evidence of the making and breaking capacity for the circuit-breakers and the make-proof earthing switches inside the panel
- Withdrawable vacuum circuit-breaker
- Maximum availability due to modular design
- Maximum security of operation by self-explaining operating logic
- Maintenance interval ≥ 10 years.

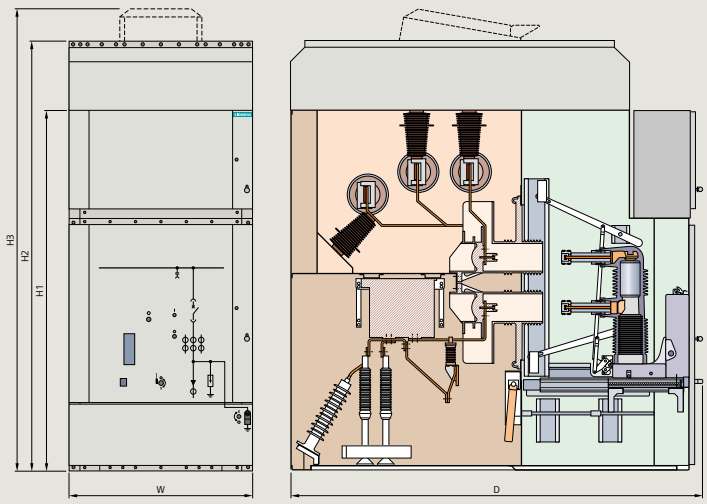

Dimensions			in mm
Width	W	Circuit-breaker panel	1,200
		Disconnecting panel	1,200
		Switch-fuse panel including auxiliary transformer	1,400
		Bus sectionalizer	2 × 1,200
		Metering panel	1,200
Height	H1	With standard low-voltage compartment	2,650
Height	H2	Standard panel	2,800
Height	H3	Optionally with internal arc absorber	3,010
Depth	D	Single busbar	2,650

Fig. 3.2-10: Dimensions of NXAIR S

1
2
3
4
5
6
7
8
9
10
11
12
?

8BT1

Fig. 3.2-11: 8BT1 panel

Performance features

The air-insulated, cubicle-type switchgear type 8BT1 is a factory-assembled, type-tested indoor switchgear for lower ratings in the distribution and process level up to 24 kV, 25 kA, 2,000 A.

- Type-tested, IEC 62271-200, cubicle-type, loss of service continuity category: LSC 2A; partition class: PM; internal arc classification: IAC A FLR ≤ 25 kA 1 s
- Insulating medium air is always available
- Evidence of the making and breaking capacity for the circuit-breakers and the make-proof earthing switches inside the panel
- Single busbar
- Withdrawable vacuum circuit-breaker
- All switching operations with door closed.

Rated			
Voltage	kV	12	24
Frequency	Hz	50	50
Short-duration power-frequency withstand voltage (phase/phase, phase/earth)	kV	28	50
Lightning impulse withstand voltage (phase/phase, phase/earth)	kV	75	125
Short-circuit breaking current	max. kA	25	25
Short-time withstand current, 3 s	max. kA	25	25
Short-circuit making current	max. kA	63	63
Peak withstand current	max. kA	63	63
Normal current for busbar	max. A	2,000	2,000
Normal current for feeders with circuit-breaker with switch-disconnector with switch-disconnector and fuses	 max. A max. A max. A	 2,000 630 200 A*	 2,000 630 200 A*
* Depending on rated current of the HV HRC fuses used.			

Table 3.2-15: Technical data of 8BT1

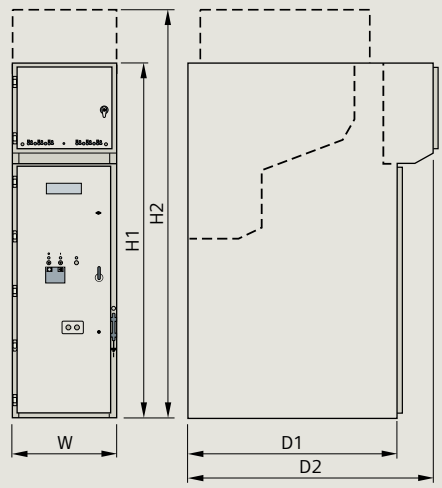

All panel types			in mm
7.2/12 kV			
Width	W	For circuit-breaker max. 1,250 A For circuit-breaker 2,000 A For switch-disconnector	600 800 600
Height	H1 H2 H2	With standard low-voltage compartment With pressure relief system With lead-off duct	2,050 2,300* 2,350*
Depth	D1 D2	Without low-voltage compartment With low-voltage compartment	1,200 1,410
24 kV			
Width	W	For circuit-breaker max. 1,250 A For circuit-breaker 2,000 A For switch-disconnector	800 1,000 800
Height	H1 H2 H2	With standard low-voltage compartment With pressure relief system With lead-off duct	2,050 2,300* 2,350*
Depth	D1 D2	Without low-voltage compartment With low-voltage compartment	1,200 1,410
* For 1 s arc duration.			

Fig. 3.2-12: Dimensions of 8BT1

1
2
3
4
5
6
7
8
9
10
11
12
?

8BT2

Fig. 3.2-13: 8BT2 switchgear

Rated		
Voltage	kV	36
Frequency	Hz	50/60
Short-duration power-frequency withstand voltage (phase/phase, phase/earth)	kV	70
Lightning impulse withstand voltage (phase/phase, phase/earth)	kV	170
Short-circuit breaking current	max. kA	31.5
Short-time withstand current, 3 s	max. kA	31.5
Short-circuit making current	max. kA	80/82*
Peak withstand current	max. kA	80/82*
Normal current for busbar	max. A	3,150
Normal current for feeders with circuit-breaker	max. A	3,150

* Values for 50 Hz: 80 kA; for 60 Hz: 82 kA.

Table 3.2-16: Technical data of 8BT2

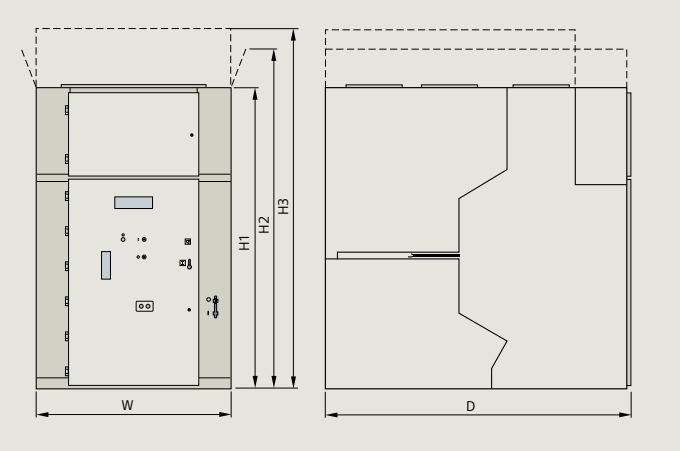

Dimensions			in mm
Width	W	≤ 3,150 A feeder current	1,200
Height	H1	Intermediate panel	2,400
Height	H2	End panel with side baffles	2,750 / 2,800*
Height	H3	Panel with closed duct	2,900**
Depth	D	Wall-standing, IAC A FL	2,450
		Free-standing, IAC A FLR	2,700

* H2 indicates side baffles for internal arc protection
** Closed duct for IAC-classification A FLR

Fig. 3.2-14: Dimensions of 8BT2

Performance features

The air-insulated, metal-clad switchgear type 8BT2 is a factory-assembled, type-tested indoor switchgear for use in the distribution and process level up to 36 kV, 31.5 kA, 3,150 A.

- Type-tested, IEC 62271-200, metal-clad, loss of service continuity category: LSC 2B; partition class: PM; internal arc classification: IAC A FLR ≤ 31.5 kA 1 s
- Insulating medium air is always available
- Evidence of the making and breaking capacity for the circuit-breakers and the make-proof earthing switches inside the panel
- Single busbar
- Withdrawable vacuum circuit-breaker
- All switching operations with door closed.

1
2
3
4
5
6
7
8
9
10
11
12
?

8DA/8DB

Fig. 3.2-15: 8DA switchgear for single-busbar applications (on the left), 8DB switchgear for double-busbar applications (on the right)

8DA/8DB are gas-insulated medium-voltage circuit-breaker switchgear assemblies up to 40.5 kV with the advantages of the vacuum switching technology – for a high degree of independence in all applications. 8DA/8DB are suitable for primary distribution systems up to 40.5 kV, 40 kA, up to 5,000 A.

Performance features

- Type-tested according to IEC 62271-200
- Enclosure with modular standardized housings made from corrosion-resistant aluminum alloy
- Safe-to-touch enclosure and standardized connections for plug-in cable terminations
- Operating mechanisms and transformers are easily accessible outside the enclosure
- Metal-enclosed, partition class PM
- Loss of service continuity category for switchgear: LSC 2
- Internal arc classification: IAC A FLR 40 kA 1 s.

Rated					
Voltage	kV	12	24	36	40.5
Frequency	Hz	50/60	50/60	50/60	50/60
Short-duration power-frequency withstand voltage	kV	28	50	70	85
Lightning impulse withstand voltage	kV	75	125	170	185
Short-circuit breaking current	max. kA	40	40	40	40
Short-time withstand current, 3 s	max. kA	40	40	40	40
Short-circuit making current	max. kA	100	100	100	100
Peak withstand current	max. kA	100	100	100	100
Normal current for busbar	max. A	5,000	5,000	5,000	5,000
Normal current for feeders	max. A	2,500	2,500	2,500	2,500

Table 3.2-17: Technical data of 8DA/8DB

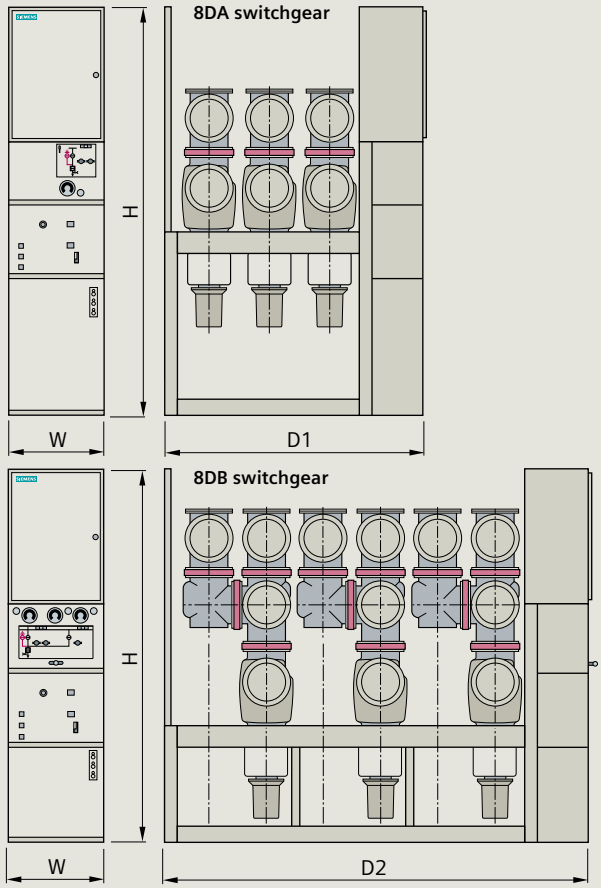

Dimensions			In mm
Width (spacing)	W		600
Height	H	Standard design Design with higher low-voltage compartment	2,350 2,700
Depth	D1 D2	Single-busbar switchgear Double-busbar switchgear	1,625 2,665

Fig. 3.2-16: Dimensions of 8DA/8DB

Advantages

- Independent of environment and climate
- Compact
- Maintenance-free
- Personal safety
- Operational reliability
- Environmentally compatible
- Cost-efficient.

1
2
3
4
5
6
7
8
9
10
11
12
?

8DJH Compact

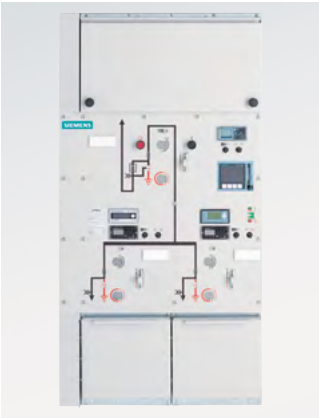

Fig. 3.2-17: 8DJH Compact

The gas-insulated medium-voltage switchgear type 8DJH Compact is used for power distribution in secondary distribution systems up to 24 kV. Ring-main feeders and transformer feeders are all part of a comprehensive product range to satisfy all requirements with the highest level of operational reliability – also for extreme ambient conditions.

Performance features

- Type-tested according to IEC 62271-200
- Sealed pressure system with SF_6 filling for the entire service life
- Safe-to-touch enclosure and standardized connections for plug-in cable terminations
- 3-pole, gas-insulated switchgear vessel for switching devices and busbar
- Panel blocks
- Switching devices: three-position switch-disconnector (CLOSED – OPEN – EARTHED), switch-fuse combination for distribution transformer protection
- Earthing function of switching devices generally make-proof.

Rated							
Voltage		kV	7.2	12	15	17.5	24
Frequency		Hz	50/60	50/60	50/60	50/60	50/60
Short-duration power-frequency withstand voltage		kV	20	28	36	38	50
Lightning impulse withstand voltage		kV	60	75	95	95	125
Normal current for ring-main feeders		A	400 or 630				
Normal current for busbar		max. A	630				
Normal current for transformer feeders		A	200*				
Short-time withstand current, 1 s	50 Hz	max. kA	25	25	25	25	20
Short-time withstand current, 3 s	50 Hz	max. kA	20	20	20	20	20
Peak withstand current	50 Hz	max. kA	63	63	63	63	50
Short-circuit making current for ring-main feeders for transformer feeders	50 Hz	 max. kA max. kA	 63 63	 63 63	 63 63	 63 63	 50 50
Short-time withstand current, 1 s	60 Hz	max. kA	21	21	21	21	20
Short-time withstand current, 3 s	60 Hz	max. kA	21	21	21	21	20
Peak withstand current	60 Hz	max. kA	55	55	55	55	52
Short-circuit making current for ring-main feeders for transformer feeders	60 Hz	 max. kA max. kA	 55 55	 55 55	 55 55	 55 55	 52 52
* Depending on HV HRC fuse-link							

Table 3.2-18: Technical data of 8DJH Compact

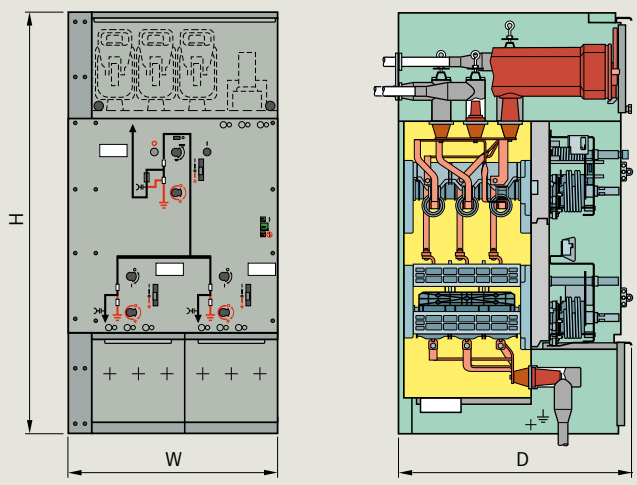

Dimensions			In mm
Width	W	Number of feeders (in extracts) 3 feeders (RRT) 4 feeders (RRT-R) 6 feeders (RRT-RRT)	 620**/700*** 930**/1,010*** 1,240**/1,400***
Height	H		1,400/1,700
Depth	D	Standard switchgear	775
** Internal arc classification IAC A F, *** Internal arc classification IAC A FLR			

Fig. 3.2-18: Dimensions of 8DJH Compact

1
2
3
4
5
6
7
8
9
10
11
12
?

8DJH

Fig. 3.2-19: 8DJH block type

The gas-insulated medium-voltage switchgear type 8DJH is used for power distribution in secondary distribution systems up to 24 kV. Ring-main feeders, circuit-breaker feeders and transformer feeders are all part of a comprehensive product range to satisfy all requirements with the highest level of operational reliability – also for extreme ambient conditions.

Performance features

- Type-tested according to IEC 62271-200
- Sealed pressure system with SF_6 filling for the entire service life
- Safe-to-touch enclosure and standardized connections for plug-in cable terminations
- 3-pole, gas-insulated switchgear vessel for switching devices and busbar
- Panel blocks and single panels available
- Switching devices: three-position switch-disconnector (ON – OFF – EARTH), switch-fuse combination for distribution transformer protection, vacuum circuit-breaker with three-position disconnector, earthing switch.

Rated							
Voltage		kV	7.2	12	15	17.5	24
Frequency		Hz	50/60	50/60	50/60	50/60	50/60
Short-duration power-frequency withstand voltage		kV	20	28*	36	38	50
Lightning impulse withstand voltage		kV	60	75	95	95	125
Normal current for ring-main feeders		A	400 or 630				
Normal current for busbar		max. A	630				
Normal current for circuit-breaker feeders		A	250 or 630				
Normal current for transformer feeders		A	200**				
Short-time withstand current, 1 s	50 Hz	max. kA	25	25	25	25	20/21
Short-time withstand current, 3 s	50 Hz	max. kA	20/21	20/21	20/21	20/21	20/21
Peak withstand current	50 Hz	max. kA	63	63	63	63	50/52.5
Short-circuit making current	50 Hz						
for ring-main feeders	50 Hz	max. kA	63	63	63	63	50/52.5
for circuit-breaker feeders	50 Hz	max. kA	63	63	63	63	50/52.5
for transformer feeders	50 Hz	max. kA	63	63	63	63	50/52.5
Short-time withstand current, 1 s	60 Hz	max. kA	25	25	25	25	20/21
Short-time withstand current, 3 s	60 Hz	max. kA	20/21	20/21	20/21	20/21	20/21
Peak withstand current	60 Hz	max. kA	65	65	65	65	52/55
Short-circuit making current	60 Hz						
for ring-main feeders	60 Hz	max. kA	65	65	65	65	52/55
for circuit-breaker feeders	60 Hz	max. kA	65	65	65	65	52/55
for transformer feeders	60 Hz	max. kA	65	65	65	65	52/55

* 42 kV according to some national requirements ** Depending on HV HRC fuse-link

Table 3.2-19: Technical data of 8DJH

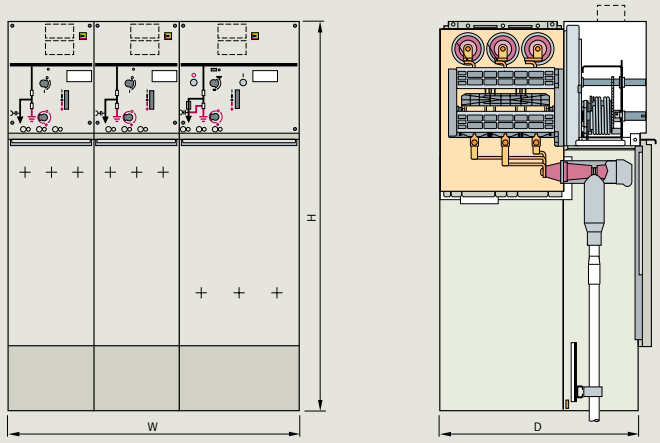

Dimensions			In mm
Width	W	Number of feeders (in extracts) 2 feeders (e.g., RR) 3 feeders (e.g., RRT) 4 feeders (e.g., 3R + 1T)	 620 1,050 1,360
Height	H	Panels without low-voltage compartment Panels with low-voltage compartment (option) Switchgear with pressure absorber (option)	1,200/1,400/1,700 1,400–2,600 1,800–2,600
Depth	D	Standard switchgear Switchgear with pressure absorber (option)	775 890

Fig. 3.2-20: Dimensions of 8DJH block types

1
2
3
4
5
6
7
8
9
10
11
12
?

8DJH

Fig. 3.2-21: 8DJH single panel

- Earthing function of switching devices generally make-proof
- Metal-enclosed, partition class PM
- Loss of service continuity category for switchgear: LSC 2
- Internal arc classification (option):
  – IAC A FL 21 kA, 1 s
  – IAC A FLR 21 kA, 1 s

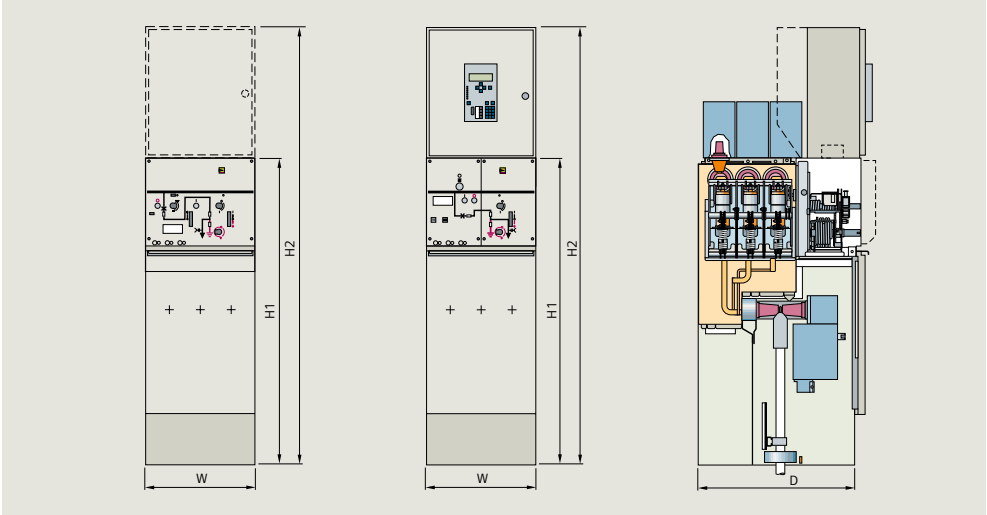

Dimensions			In mm
Width	W	Ring-main feeders Transformer feeders Circuit-breaker feeders Bus sectionalizer panels	310/500 430 430/500 430/500/620
		Busbar metering panels	430/500
		Billing metering panels	840
Height	H1 H2	Panels without low-voltage compartment Panels with low-voltage compartment Switchgear with pressure absorber (option)	1,200/1,400/1,700 1,400–2,600 1,800–2,600
Depth	D	Standard switchgear Switchgear with pressure absorber (option)	775 890

Fig. 3.2-22: Dimensions of 8DJH single panels

Advantages

- No gas work during installation
- Compact
- Independent of environment and climate
- Maintenance-free
- High operating and personal safety
- Switchgear interlocking system with logical mechanical interlocks
- Operational reliability and security of investment
- Environmentally compatible
- Cost-efficient.

Typical uses

8DJH switchgear is used for power distribution in secondary distribution systems, such as:

- Public energy distribution
  – Transformer substations
  – Customer transfer substations
  – High-rise buildings
- Infrastructure facilities
  – Airports and ports
  – Railway and underground railway stations
  – Water and wastewater treatment
- Industrial plants
  – Automotive industry
  – Chemical industry
  – Open-cast mines
- Renewable power generation
  – Wind power plants
  – Solar power plants
  – Biomass power plants.

1
2
3
4
5
6
7
8
9
10
11
12
?

8DJH 36

Fig. 3.2-23: 8DJH 36 block type

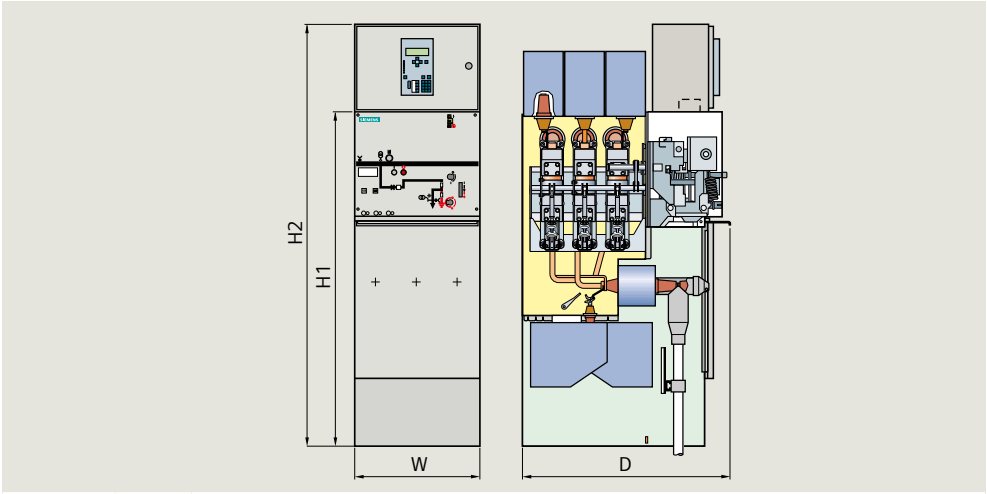

Dimensions			In mm
Width	W	Ring-main feeders Transformer feeders Circuit-breaker feeders	430 500 590
		RRT block RRL block	1,360 1,450
		Billing metering panels	1,100
Height	H1 H2	Panels without low-voltage compartment Panels with low-voltage compartment	1,600 1,800–2,200
Depth	D	Standard switchgear Switchgear with pressure absorber (option)	920/980 1,035/1,095

Fig. 3.2-24: Dimensions of 8DJH 36

The gas-insulated medium voltage switchgear type 8DJH 36 is used for power distribution in secondary distribution systems up to 36 kV. Ring-main feeders, circuit-breaker feeders and transformer feeders are all part of a comprehensive product range to satisfy all requirements with the highest level of operational reliability – also for extreme conditions.

Performance features

- Type-tested according to IEC 62271-200
- Sealed pressure system with SF_6 filling for the entire service life
- Safe-to-touch enclosure and standardized connections for plug-in terminations
- 3-pole, gas-insulated switchgear vessel for switching devices and busbar
- Panel blocks and single panels available
- Switching devices: three-position switch-disconnector (OPEN – CLOSED – EARTHED), switch-fuse combination for distribution transformer protection, vacuum circuit-breaker with three-position disconnector
- Earthing function of switching devices generally make-proof
- Metal-enclosed, partion class PM
- Loss of service continuity category for switchgear: LSC 2
- Internal arc classifcation (option):
  - IAC A FL 20 kA, 1 s
  - IAC A FLR 20 kA, 1 s.

Advantages

- No gas work during installation
- Compact
- Independent of environment and climate
- Maintenance-free
- High operating and personal safety
- Switchgear interlocking system with logical mechanical interlocks
- Operational reliability and security of investment
- Enviromentally compatible
- Cost-efficent.

Rated			
Voltage		kV	**36**
Frequency		Hz	50/60
Short-duration power-frequency withstand voltage		kV	70
Lightning impulse withstand voltage		kV	170
Normal current for ring-main feeders		A	630
Normal current for busbar		max. A	630
Normal current for circuit-breaker feeders		A	630
Normal current for transformer feeders		A	200*
Short-time withstand current, 1 s	50 Hz	max. kA	20
Short-time withstand current, 3 s	50 Hz	max. kA	20
Peak withstand current	50 Hz	max. kA	50
Short-circuit making current for ring-main feeders for circuit-breaker feeders for transformer feeders	50 Hz	 max. kA max. kA max. kA	 50 50 50
Short-time withstand current, 1 s	60 Hz	max. kA	20
Short-time withstand current, 3 s	60 Hz	max. kA	20
Peak withstand current	60 Hz	max. kA	52
Short-circuit making current for ring-main feeders for circuit-breaker feeders for transformer feeders	60 Hz	 max. kA max. kA max. kA	 52 52 52
* Depending on HV HRC fuse-link			

Table 3.2-20: Technical data of 8DJH 36

1
2
3
4
5
6
7
8
9
10
11
12
?

NXPLUS

Fig. 3.2-25: NXPLUS switchgear for single-busbar applications (on the left), NXPLUS switchgear for double-busbar applications (on the right)

Rated / Busbar system		Single double	Single double	Single double	Single
Voltage	kV	12	24	36	40.5
Frequency	Hz	50/60	50/60	50/60	50/60
Short-duration power-frequency withstand voltage	kV	28	50	70	85
Lightning impulse withstand voltage	kV	75	125	170	185
Short-circuit breaking current	max. kA	31.5	31.5	31.5	31.5
Short-time withstand current, 3 s	max. kA	31.5	31.5	31.5	31.5
Short-circuit making current	max. kA	80	80	80	80
Peak withstand current	max. kA	80	80	80	80
Normal current for busbar	max. A	2,500	2,500	2,500	2,000
Normal current for feeders	max. A	2,500	2,500	2,500	2,000

Table 3.2-21: Technical data of NXPLUS

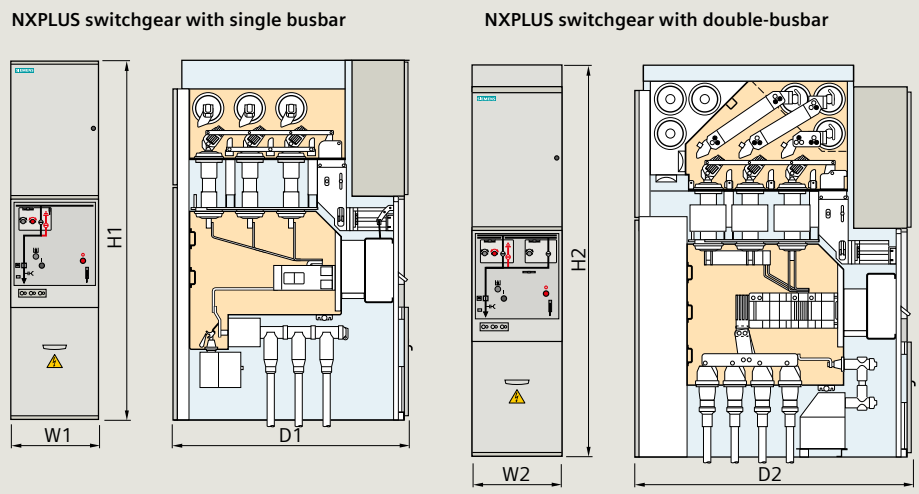

Dimensions			In mm
Width (spacing)	W1	Feeders up to 2,000 A	600
	W2	Feeders up to 2,300 A	900
	W2	Feeders up to 2,500 A	1,200
Height	H1 H2	Single-busbar switchgear Double-busbar switchgear	2,450 2,600
Depth	D1 D2	Single-busbar switchgear Double-busbar switchgear	1,600 1,840

Fig. 3.2-26: Dimensions of NXPLUS

NXPLUS is a gas-insulated medium-voltage circuit-breaker switchgear up to 40.5 kV with the advantages of the vacuum switching technology – for a high degree of independence in all applications. NXPLUS can be used for primary distribution systems up to 40.5 kV, up to 31.5 kA, up to 2,000 A (for double-busbar switchgear up to 2,500 A), (see catalog HA35.51).

Performance features

- Type-tested according to IEC 62271-200
- Sealed pressure system with SF_6 filling for the entire service life
- Safe-to-touch enclosure and standardized connections for plug-in cable terminations
- Separate 3-pole gas-insulated modules for busbar with three-position disconnector, and for circuit-breaker
- Interconnection of modules with 1-pole insulated and screened module couplings
- Operating mechanisms and transformers are arranged outside the switchgear vessels and are easily accessible
- Metal-enclosed, partition class PM
- Loss of service continuity category for switchgear: LSC 2
- Internal arc classification: IAC A FLR 31.5 kA, 1 s
- No gas work during installation or extension.

Advantages

- Independent of environment and climate
- Compact
- Maintenance-free
- Personal safety
- Operational reliability
- Environmentally compatible
- Cost-efficient.

1
2
3
4
5
6
7
8
9
10
11
12
?

NXPLUS C

Fig. 3.2-27: NXPLUS C panel

The compact NXPLUS C is the medium-voltage circuit-breaker switchgear that made gas insulation with the proven vacuum switching technology economical in its class. The NXPLUS C is used for secondary and primary distribution systems up to 24 kV, up to 31.5 kA and up to 2,500 A. It can also be supplied as double-busbar switchgear in a back-to-back arrangement (see catalogue HA35.41).

Performance features

- Type-tested according to IEC 62271-200
- Sealed pressure system with SF_6 filling for the entire service life
- Safe-to-touch enclosure and standardized connections for plug-in cable terminations
- Loss of service continuity category for switchgear:
  - Without HV HRC fuses: LSC 2
- 1-pole insulated and screened busbar
- 3-pole gas-insulated switchgear vessels with three-position switch and circuit-breaker
- Operating mechanisms and transformers are located outside the switchgear vessel and are easily accessible
- Metal-enclosed, partition class PM

Rated						
Voltage	kV	7.2	12	15	17.5	24
Frequency	Hz	50/60	50/60	50/60	50/60	50/60
Short-duration power-frequency withstand voltage	kV	20	28*	36	38	50
Lightning impulse withstand voltage	kV	60	75	95	95	125
Short-circuit breaking current	max. kA	31.5	31.5	31.5	25	25
Short-time withstand current, 3 s	max. kA	31.5	31.5	31.5	25	25
Short-circuit making current	max. kA	80	80	80	63	63
Peak withstand current	max. kA	80	80	80	63	63
Normal current for busbar	max. A	2,500	2,500	2,500	2,500	2,500
Normal current for feeders	max. A	2,500	2,500	2,500	2,000	2,000
* 42 kV according to some national requirements						

Table 3.2-22: Technical data of NXPLUS C

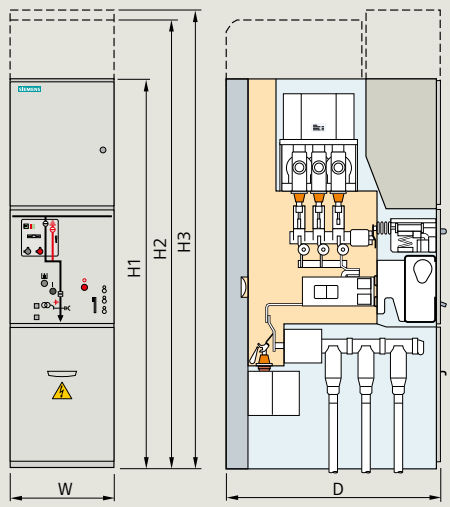

Dimensions			In mm
Width	W	630 A/1,000 A/1,250 A	600
		2,000 A/2,500 A	900
Height	H1	Standard design	2,250 (W = 600); 2,550 (W = 900)
	H2	With horizontal pressure relief duct	2,640 (W = 600); 2,640 (W = 900)
	H3	With higher low-voltage compartment	2,650
Depth	D	Wall-standing arrangement Free-standing arrangement	1,250 1,250

Fig. 3.2-28: Dimensions of NXPLUS C

- With horizontal pressure relief duct
- Extended number of operating cycles (up to 15 kV, up to 31.5 kV, up to 1,250 A)
  - DISCONNECTING function: 5,000 ×, 10,000 ×
  - READY-TO-EARTH function: 5,000 ×, 10,000 ×
  - CIRCUIT-BREAKER function: 30,000 ×
- Certificate of compliance issued by Canadian Standard Association (CSA)
- Type-approved by LR, DNV, GL, ABS, RMR
  - Internal arc classification for:
    - Wall-standing arrangement: IAC A FL 31.5 kA, 1 s
  - Free-standing arrangement: IAC A FLR 31.5 kA, 1 s.

Advantages

- No gas work during installation or extension
- Compact
- Independent of environment and climate
- Maintenance-free
- Personal safety
- Operational reliability
- Environmentally compatible
- Cost-efficient.

NXPLUS C Wind

Fig. 3.2-29: NXPLUS C Wind

The compact medium voltage circuit-breaker switchgear NXPLUS C Wind is especially designed for wind turbines. Due to the small dimensions it fits into wind turbines where limited space is available. The NXPLUS C Wind is available for 36 kV, up to 25 kA and busbar currents up to 1,000 A. NXPLUS C Wind offers a circuit-breaker, a disconnector and a switch-disconnector (ring-main) panel.

Performance features

- Type-tested according to IEC 62271-200
- Sealed pressure system with SF_6 filling for the entire service life
- Safe-to-touch enclosure and standardized connections for plug-in cable terminations
- 1-pole insulated and screened busbar
- 3-pole gas-insulated switchgear vessels with three-position switch and circuit-breaker
- Operating mechanism and transformers are located outside the vessel and are easily accessible
- Metal-enclosed, partition class PM
- Loss of service continuity category LSC 2B
- Internal arc classification for:
  - Wall-standing arrangement: IAC FL A 25 kA, 1 s
  - Free-standing arrangement: IAC FLR A 25 kA, 1 s.

Rated		
Voltage	kV	**36**
Frequency	Hz	50 / 60
Short-duration power-frequency withstand voltage	kV	70
Lightning impulse withstand voltage	kV	170
Short-circuit breaking current	max. kA	25
Short-time withstand current, 1 s	max. kA	25
Short-time withstand current, 3 s	max. kA	20
Short-circuit making current	max. kA	63
Peak withstand current	max. kA	63
Normal current for busbar	max. A	1,000
Normal current for circuit-breaker panel	max. A	800
Normal current for disconnector panel	max. A	1,000

Table 3.2-23: Technical data of NXPLUS C Wind

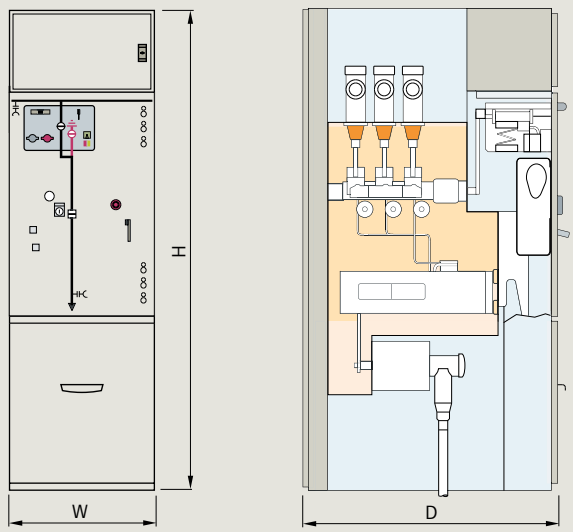

Dimensions			In mm
Width	W	Circuit-breaker panel Disconnector, switch-disconnector panel	600 450
Height	H		1,900
Depth	D		1,000

Fig. 3.2-30: Dimensions of NXPLUS C Wind

Advantages

- No gas work during installation or extension
- Compact
- Independent of enviroment and climate
- Maintenance-free
- Personal safety
- Operational reliabilty
- Enviromentally compatible
- Cost efficent.

1
2
3
4
5
6
7
8
9
10
11
12
?

SIMOSEC

Fig. 3.2-31: SIMOSEC switchgear

Rated						
Voltage		7.2 kV	12 kV	15 kV o.r.	17.5 kV	24 kV
Frequency	Hz	50/60	50/60	50/60	50/60	50/60
Short-duration power-frequency withstand voltage	kV	20	28*	36	38	50
Lightning impulse withstand voltage	kV	60	75	95	95	125
Short-circuit breaking current	max. kA	25	25	25	25	20
Short-time withstand current, 1 s	max. kA	25	25	25	25	20
Short-time withstand current, 3 s	max. kA	–	21	21	21	20
Short-circuit making current	max. kA	25	25	25	25	20
Peak withstand current	max. kA	63	63	63	63	50
Normal current for busbar	A	630 or 1,250				
Normal current for feeders	max. A	1,250	1,250	1,250	1,250	1,250
* 42 kV/75 kV, according to some national requirements						

Table 3.2-24: Technical data of SIMOSEC

The air-insulated medium-voltage switchgear type SIMOSEC is used for power distribution in secondary and primary distribution systems up to 24 kV and up to 1,250 A. The modular product range includes individual panels such as ring-main, transformer and circuit-breaker panels, or metering panels to fully satisfy all requirements for power supply companies and industrial applications.

Performance features

- Type-tested according to IEC 62271-200
- Phases for busbar and cable connection are arranged one behind the other
- 3-pole gas-insulated switchgear vessel with three-position disconnector, circuit-breaker and earthing switch as a sealed pressure system with SF_6 filling for the entire service life
- Air-insulated busbar system
- Air-insulated cable connection system, for conventional cable sealing ends
- Metal-enclosed, partition class PM
- Loss of service continuity category for switchgear: LSC 2
- Internal arc classification for:
  - Wall-standing arrangement: IAC A FL 21 kA, 1 s
  - Free-standing arrangement: IAC A FLR 21 kA, 1 s
- Can be mounted side-by-side and extended as desired.

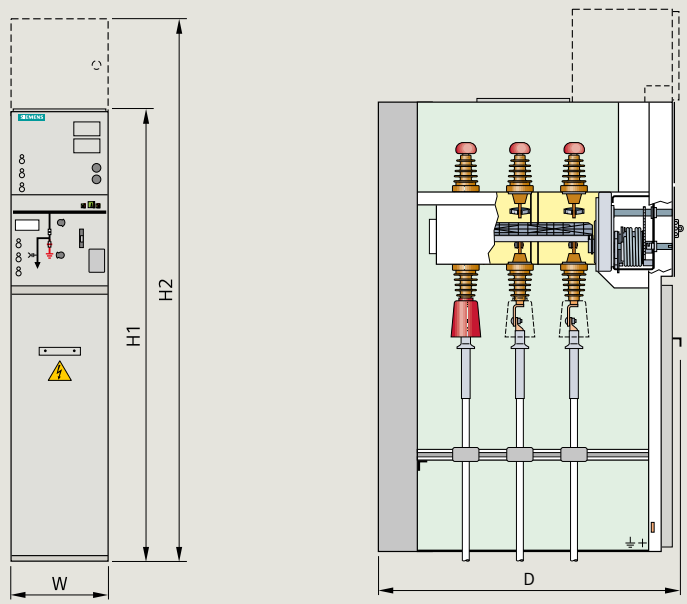

Dimensions			In mm
Width (spacing)	W	Ring-main feeders, transformer feeders	375 or 500
		Circuit-breaker feeders, bus sectionalizer	750 or 875
		Metering panels	500/750/875
Height	H1 H2	Panels without low-voltage compartment Panels with low-voltage compartment	1,760 2,100 or 2,300
Depth	D	Standard	1,170 and 1,230

Fig. 3.2-32: Dimensions of SIMOSEC

Advantages

- Compact modular design
- High operating and personal safety
- Environmentally compatible
- Cost-efficient.

1
2
3
4
5
6
7
8
9
10
11
12
?

3.2.5 High-current and generator switchgear

Siemens high-current and generator switchgear with vacuum switching technology is the result of more than 20 years of continuous development, and so it fulfills the highest technological and quality requirements.

Under the high thermal and mechanical stress of generator switching applications, generator switchgear with vacuum switching technology serves as an important operational equipment for the protection of transformers and generators.

Also, it offers numerous advantages regardless of the type of power plant. Due to the use of tested and durable components with a service life of more than 20 years, a high level of operational reliability and availability is achieved that leads to increased profitability. The use of maintenance-fee vacuum switching technology and components in the generator switchgear guarantees minimum maintenance costs. Generator switchgear ensures a high degree of personnel safety thanks to its internal arc classification.

Customer advantages:
- Increases cost-efficiency and service continuity
- Stands for optimal personal safety
- Preserves the environment
- Minimizes installation and maintenance costs
- Offers tailored solutions according to the customer requirements.

HB3 – single-phase encapsulated

The HB3 generator switchgear is suitable for power plants up to 400 MW depending on the type of power plant and the operating voltage.

HB3 is the first generator switchgear worldwide with vacuum generator circuit-breakers for ratings up to 12,500 A with natural cooling and a switching capacity of 100 kA type-tested according to the standards IEEE C37.013 and 62271-37-013. It offers maximum operational reliability and a high degree of personal safety, as short circuits between phases are excluded due to the single-phase encapsulation.

The switchgear is type-tested in accordance with IEC 62271-200 (fig. 3.2-33).

Fig. 3.2-33: HB3 generator switchgear with horizontal busbars

Fig. 3.2-34: HB1 generator switchgear for outdoor installation

HB1 – for indoor and outdoor installation

The HB1 generator switchgear with horizontal busbars is suitable for power plants up to 170 MW depending on the type of power plant and the operating voltage.

This air-insulated, three-phase encapsulated generator switchgear is available for indoor and outdoor installation. In addition, it enables in a wide area of applications thanks to its flexible connection concept using bus ducts, cables and solid-insulated busbars. The HB1 is especially suited for industrial power plants with medium-sized gas and steam turbines, as well as for solar power plants (fig. 3.2-34).

1
2
3
4
5
6
7
8
9
10
11
12
?

VB1 – the highly flexible, modular expandable solution

The VB1 generator switchgear is highly flexible, with a modularly expandable concept that makes it suitable for a power range up to 140 MW.

This switchgear features a highly compact and customizable design with space for modular extension. This characteristic makes it especially interesting for power plants that are operated with multiple generators or feeders for auxiliary supply, excitation, or brake disconnectors. Because of the high requirements in terms of switching capacity, space constraints and accessibility, this switchgear is frequently used in hydro power plants and retrofit projects.

As a containerized solution, the VB1 switchgear meets the highest requirements even under extreme climatic conditions, e.g., in desert regions, or when exposed to corrosive effects like those encountered in the chemical industry. (fig. 3.2-35)

VB1-D – with circuit-breaker truck for 63 kA

The VB1-D generator switchgear with vertical busbar and truck-type design provides a high switchgear availability for safe and cost-efficient power generation. Installation and maintenance are easy to perform thanks to the uncomplicated technology. The switchgear is suitable for power ratings up to 110 MW.

VB1-D offers maximum personal safety through the internal arc classification IAC A FLR 63 kA, 0.3 s, and maximum availability through the loss of service continuity category LSC 2B, as well as through the partition class PM.

The air-insulated, metal-enclosed switchgear is type-tested according to IEC 62271-200, and is suitable for indoor installation (fig. 3.2-36).

HIGS – Highly Integrated Generator Switchgear

The HIGS generator switchgear was developed specifically for Siemens industrial gas turbines SGT-600 to SGT-800 as well as for steam turbines SST-400 to SST-600 in the power range up to 65 MW. It can be adapted to the requirements of other types of gas and steam turbines.

This switchgear is connected directly to the generator, thus combining the conventional generator terminal box with the functionality of a generator switchgear. It is also possible to implement neutral point connection and an auxiliary feeder.

Profitability is increased by reduced interfaces and space requirements.

The HIGS switchgear is suitable for indoor and outdoor installation (fig. 3.2-37).

Fig. 3.2-35: VB1 generator switchgear with vertical busbars

Fig. 3.2-36: VB1-D with circuit-breaker truck

Fig. 3.2-37: HIGS – Highly Integrated Generator Switchgear

1
2
3
4
5
6
7
8
9
10
11
12
?

NXAIR – for generator applications

The extendable medium-voltage NXAIR switchgear up to 17.5 kV, 50 kA uses withdrawable technology and is especially suitable for generator switching applications in small industrial power plants up to 65 MW.

NXAIR offers maximum personal safety through the internal arc classification IAC A FLR 50 kA, 1 s, maximum availability through the loss of service continuity category LSC 2B, as well as maximum reliability through the partition class PM.

The NXAIR can also be equipped with generator circuit-breakers tested in accordance with the standards IEEE C37.013 and IEEE/IEC 62271-37-013. This enables the generator and auxiliary supply application to be combined in a joint switchgear, which reduces space requirements and interfaces and increases the profitability fig. 3.2-38).

Fig. 3.2-38: NXAIR for generator applications

Generator switchgear	HB3	HB1	VB1	VB1-D	HIGS	NXAIR
Application area	80 MW – 400 MW	50 MW – 170 MW	50 MW – 140 MW	50 MW – 110 MW	25 MW – 65 MW	10 MW – 65 MW
Rated voltage	up to 24 kV	up to 24 kV	up to 24 kV	up to 17.5 kV	up to 15 kV	up to 17.5 kV
Normal current	up to 12,500 A	up to 6,700 A	up to 5,500 A	up to 5,100 A	up to 3,700 A	up to 4,000 A
Rated short-time withstand current/duration	up to 100 kA/3s	72 kA/1s	up to 72 kA/1s	up to 63 kA/3s	up to 50 kA/3s	up to 50 kA/3s
Rated peak withstand current	up to 274 kA	up to 180 kA	up to 180 kA	up to 173 kA	up to 125 kA	up to 125 kA
Internal arc classification		up to IAC A FLR 63 kA/0.3s	up to IAC A FL 72 kA/0.1s	up to IAC A FLR 63 kA/0.3s		IAC A FLR 50 kA/1s
Protectiob class	IP65, IP66	IP 4X, IP54	IP 4X, IP54	IP 4X	IP42, IP54	IP 3X D
Lost of service continuity category LSC 2B	LSC 1	LSC 1	LSC 2 A	LSC 2 B	LSC 1	LSC 2 B
Installation	Indoor Outdoor	Indoor Outdoor	Indoor	Indoor	Indoor Outdoor	Indoor
Type of connection	IPB Solid-insulated busbars	Cable Bus duct Solid-insulated busbars IPB	Cable Bus duct Solid-insulated busbars	Cable Solid-insulated busbars	Directly at generator terminal	Cable Bus duct
Direction of connection: front/rear				■		■
Direction of connection: top/bottom		■	■	■	■	■
Direction of connection: lateral	■	■	■			
Auxiliary feeder		■	■	■	■	■
Exciter feeder, start-up switch	■		■			
Multiple generator switchgear			■	■		■

Table 3.2-25: Technical data

3.2.6 Industrial load center substation

Introduction

Industrial power supply systems call for a maximum level of personal safety, operational reliability, economic efficiency, and flexibility. And they likewise necessitate an integral approach that includes "before" and "after" sales service, that can cope with the specific load requirements and, above all, that is tailored to each individually occurring situation. With SITRABLOC® (fig. 3.2-39), such an approach can be easily turned into reality.

General

SITRABLOC is an acronym for Siemens TRAnsformer BLOC-type. SITRABLOC is supplied with power from a medium-voltage substation via a fuse/switch-disconnector combination and a radial cable. In the load center, where SITRABLOC is installed, several SITRABLOCs are connected together by means of cables or bars (fig. 3.2-40).

Features

- Due to the fuse/switch-disconnector combination, the short-circuit current is limited, which means that the radial cable can be dimensioned according to the size of the transformer.
- In the event of cable faults, only one SITRABLOC fails.
- The short-circuit strength is increased due to the connection of several stations in the load center. The effect of this is that, in the event of a fault, large loads are selectively disconnected in a very short time.
- The transmission losses are optimized because only short connections to the loads are necessary.
- SITRABLOC has, in principle, two transformer outputs:
  - 1,250 kVA during AN operation (ambient air temperature up to 40 °C)
  - 1,750 kVA during AF operation (140% with forced cooling).

These features ensure that, if one station fails, for whatever reason, supply of the loads is maintained without interruption.

The SITRABLOC components are:

- Transformer housing with roof-mounted ventilation for AN/AF operating mode
- GEAFOL transformer
  - (Cast-resin insulated) with make-proof earthing switch
  - AN operating mode: 100% load up to an ambient air temperature of 40 °C
  - AF operating mode: 140% load
- LV circuit-breaker as per transformer AF load
- Automatic power factor correction equipment (tuned/detuned)
- Control and metering panel as well as central monitoring interface
- Universal connection to the LV distribution busway system (fig. 3.2-41).

Whether in the automobile or food industry, in paint shops or bottling lines, putting SITRABLOC to work in the right place considerably reduces transmission losses. The energy is transformed in the production area itself, as close as possible to the loads. For installation of the system itself, no special building or fire-protection measures are necessary.

Fig. 3.2-39: SITRABLOC system

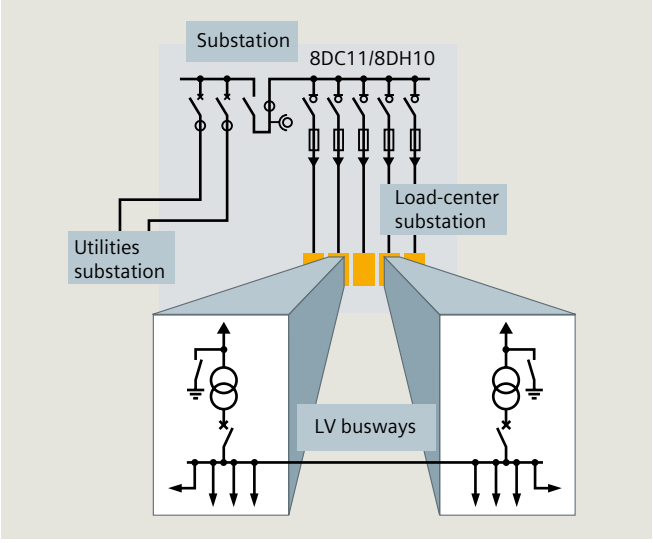

Fig. 3.2-40: Example of a schematic diagram

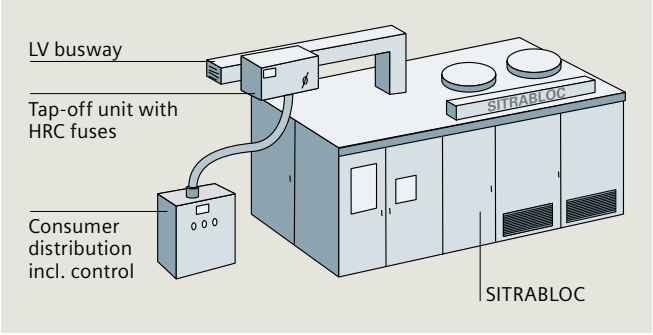

Fig. 3.2-41: Location sketch

Available with any level of output

SITRABLOC can be supplied with any level of power output, the latter being controlled and protected by a fuse/switch-disconnector combination.

A high-current busbar system into which up to four transformers can feed power ensures that even large loads can be brought onto load without any loss of energy. Due to the interconnection of units, it is also ensured that large loads are switched off selectively in the event of a fault.

Integrated automatic power factor correction

With SITRABLOC, power factor correction is integrated from the very beginning. Unavoidable energy losses – e.g., due to magnetization in the case of motors and transformers – are balanced out with power capacitors directly in the low-voltage network. The advantages are that the level of active power transmitted increases and energy costs are reduced (fig. 3.2-42).

Reliability of supply

With the correctly designed transformer output, the n-1 criterion is no longer a problem. Even if one module fails (e.g., a medium-voltage switching device or a cable or transformer), power continues to be supplied without the slightest interruption. None of the drives comes to a standstill, and the whole manufacturing plant continues to run reliably. With SITRABLOC, the power is where it is needed – and it is safe, reliable and economical.

Fig. 3.2-42: Capacitor banks

1
2
3
4
5
6
7
8
9
10
11
12
?

n-1 operating mode

n-1 criteria

With the respective design of a factory grid on the MV side as well as on the LV side, the so-called n-1 criteria is fulfilled. In case one component fails on the line side of the transformer (e.g., circuit-breaker or transformer or cable to transformer) no interruption of the supply on the LV side will occur (fig. 3.2-43).

Load required 5,000 kVA = 4 × 1,250 kVA. In case one load center (SITRABLOC) is disconnected from the MV network, the missing load will be supplied via the remaining three (n-1) load centers. SITRABLOC is a combination of everything that present-day technology has to offer. The GEAFOL® cast-resin transformers are just one example of this.

Their output is 100 % load without fans plus reserves of up to 140 % with fans. The safety of operational staff is ensured – even in the direct vicinity of the installation.

Another example is the SENTRON high-current busbar system. It can be laid out in any arrangement, is easy to install, and conducts the current wherever needed – with almost no losses. The most important thing, however, is the uniformity of SITRABLOC throughout, regardless of the layout of the modules.

The technology at a glance (table 3.2-26, fig. 3.2-45, next page)

SITRABLOC can cope with any requirements. Its features include:

- A transformer cubicle with or without fans (AN/AF operation)
- GEAFOL cast-resin transformers with make-proof earthing switch – AN operation 1,250 kVA, AF operation 1,750 kVA (fig. 3.2-43)
- External medium-voltage switchgear with fuse/switch-disconnectors
- Low-voltage circuit-breakers
- Automatic reactive-power compensation: up to 500 kVAr unrestricted, up to 300 kVAr restricted
- The SENTRON high-current busbar system: connection to high-current busbar systems from all directions
- SIMATIC ET 200/PROFIBUS interface for central monitoring system (if required).

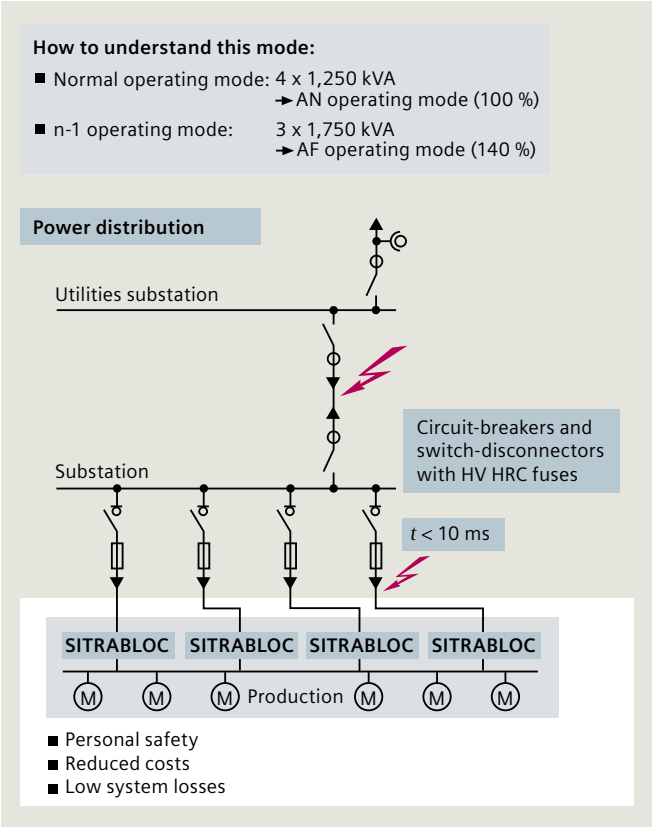

Fig. 3.2-43: n-1 operating mode

Fig. 3.2-44: Transformer and earthing switch, LV bloc

Rated voltage	12 kV and 24 kV
Transformer rating AN/AF	1,250 kV A/1,750 kVA
Transformer operating mode	100 % AN up to 40 °C 140 % AF
Power factor correction	up to 500 kVAr without reactors up to 300 kVAr with reactors
Busway system	1,250 A; 1,600 A; 2,500 A
Degree of protection	IP23 for transformer housing IP43 for LV cubicles
Dimensions (min) (LxHxD)	3,600 mm × 2,560 mm × 1,400 mm
Weight approx.	6,000 kg

Table 3.2-26: Technical data of SITRABLOC

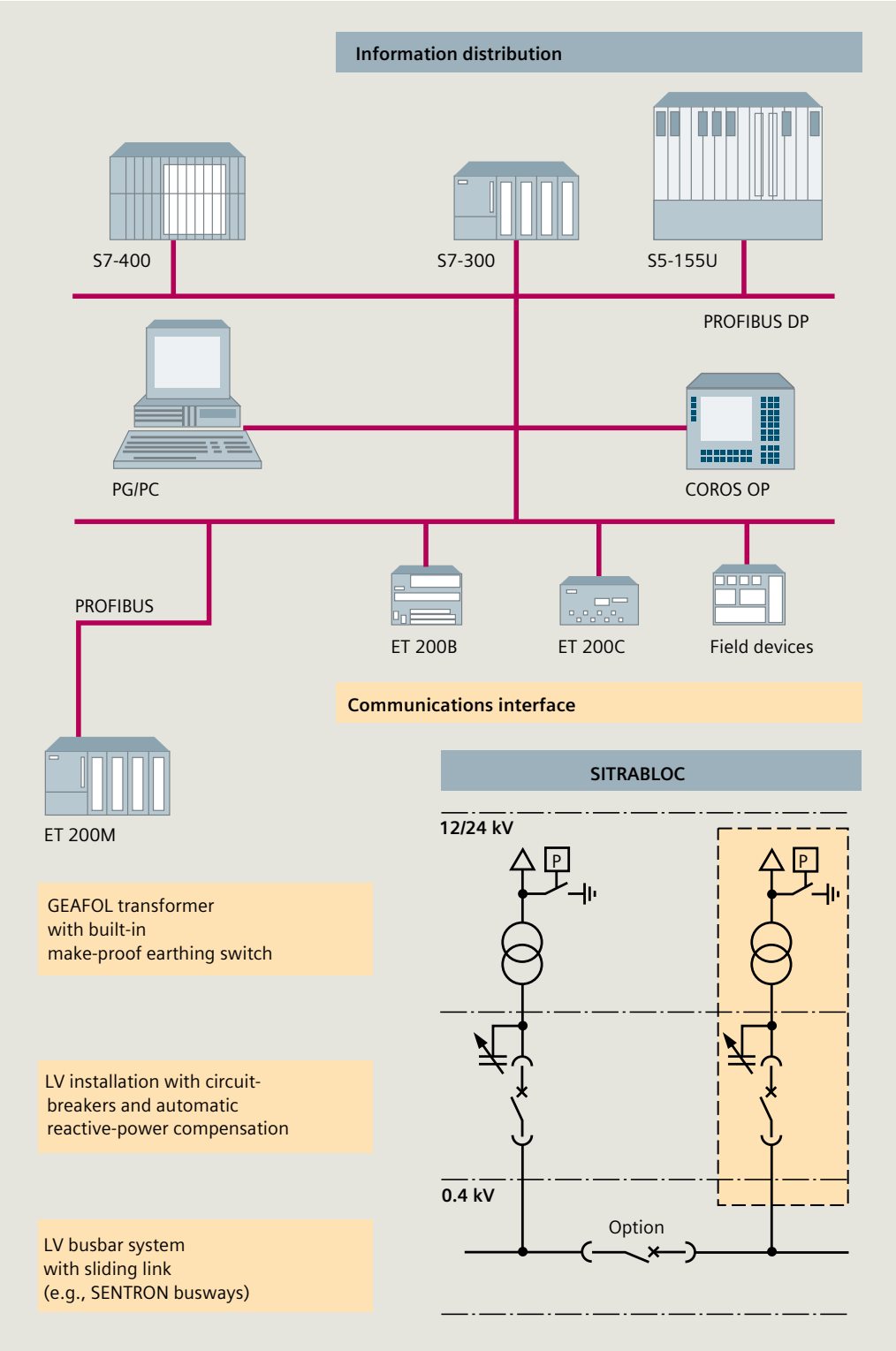

Fig. 3.2-45: SIMATIC ET 200/PROFIBUS interface for control monitoring system

For further information please contact the Customer Support for Power & Energy:

Tel.: +49 180 524 70 00
E-Mail: support.energy@siemens.com
siemens.com/csc

3.3 Low-voltage systems

3.3.1 Requirements for electrical power systems in buildings

The efficiency of electrical power supply rises and falls with qualified planning. Especially in the first stage of planning, the finding of conceptual solutions, the planner can use his creativity for an input of new, innovative solutions and technologies. They serve as a basis for the overall solution which has been economically and technically optimized in terms of the supply task and related requirements.

The following stages of calculating and dimensioning circuits and equipment are routine tasks which involve a great effort. They can be worked out efficiently using modern dimensioning tools like SIMARIS® design, so that there is more freedom left for the creative planning stage of finding conceptual solutions (fig. 3.3-1).

When the focus is limited to power supply for infrastructure projects, useful possibilities can be narrowed down. The following aspects should be taken into consideration when designing electric power distribution systems:

- Simplification of operational management by transparent, simple power system structures
- Low costs for power losses, e.g., by medium-voltage power transmission to the load centers
- High reliability of supply and operational safety of the installations even in the event of individual equipment failures (redundant supply, selectivity of the power system protection, and high availability)
- Easy adaptation to changing load and operational conditions
- Low operating costs thanks to maintenance-friendly equipment
- Sufficient transmission capacity of equipment during normal operation and also in the event of a fault, taking future expansions into account
- Good quality of the power supply, i.e., few voltage changes due to load fluctuations with sufficient voltage symmetry and few harmonic voltage distortions
- Compliance with applicable standards and project-related stipulations for special installations.

Standards

To minimize technical risks and / or to protect persons involved in handling electrotechnical components, essential planning rules have been compiled in standards. Standards represent the state of the art; they are the basis for evaluations and court decisions.

Technical standards are desired conditions stipulated by professional associations which are, however, made binding by legal standards such as safety at work regulations. Furthermore, the compliance with technical standards is crucial for any approval of operator granted by authorities or insurance coverage. While decades ago standards were mainly drafted at a national level and debated in regional committees, it has currently been agreed that initiatives shall be submitted centrally (on the IEC level) and then be adopted as regional or national standards. Only if the IEC is not interested in dealing with the matter, or if there are time constraints, a draft standard shall be prepared at the regional level.

The interrelation of the different standardization levels is illustrated in table 3.3-1. A complete list of the IEC members and further links can be obtained at www.iec.ch –> Members & Experts –> List of Members (NC).

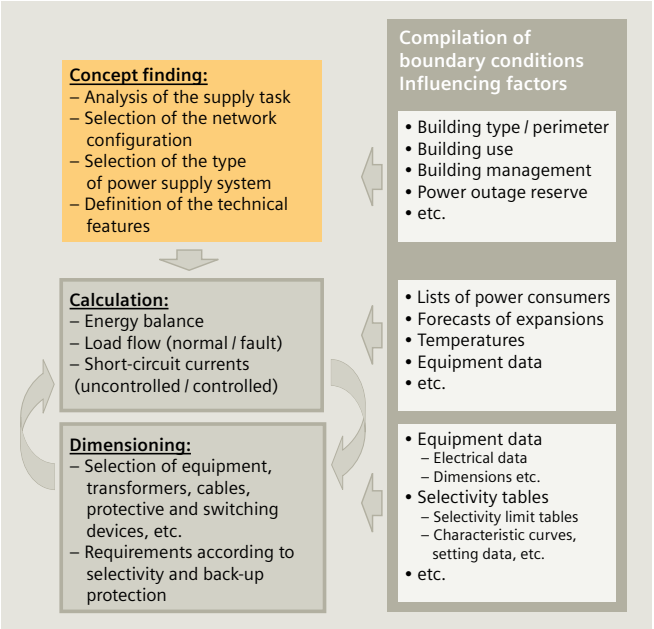

Fig. 3.3-1: Power system planning tasks

Regional	America PAS	Europe CENELEC	Australia	Asia	Africa
National	USA: ANSI	D: DIN VDE	AUS: SA	CN: SAC	SA: SABS
	CA: SCC	I: CEI	NZ: SNZ	IND: BIS	
	BR: COBEI	F: UTE		J: JISC	
		GB: BS			

ANSI	American National Standards Institute
BIS	Bureau of Indian Standards
BS	British Standards
CENELEC	European Committee for Electrotechnical Standardization (Comité Européen de Normalisation Electrotechnique)
CEI	Comitato Ellettrotecnico Italiano Electrotechnical Committee Italy
COBEI	Comitê Brasileiro de Eletricidade, Eletrônica, Iluminação e Telecomunicações
DIN VDE	Deutsche Industrie Norm, Verband deutscher Elektrotechniker (German Industry Standard, Association of German Electrical Engineers)
JISC	Japanese Industrial Standards Committee
PAS	Pacific Area Standards
SA	Standards Australia
SABS	South African Bureau of Standards
SAC	Standardisation Administration of China
SCC	Standards Council of Canada
SNZ	Standards New Zealand
UTE	Union Technique de l'Electricité et de la Communication Technical Association for Electrical Engineering & Communication

Table 3.3-1: Representation of national and regional standards in electrical engineering

1
2
3
4
5
6
7
8
9
10
11
12
?

System configurations

Table 3.3-2 and table 3.3-3 (see next page) illustrate the technical aspects and influencing factors that should be taken into account when electrical power distribution systems are planned and network components are dimensioned.

- Simple radial system (spur line topology)
  All consumers are centrally supplied from one power source. Each connecting line has an unambiguous direction of energy flow.
- Radial system with changeover connection as power reserve – partial load:
  All consumers are centrally supplied from two to n power sources. They are rated as such that each of them is capable of supplying all consumers directly connected to the main power distribution system (stand-alone operation with open couplings). If one power source fails, the remaining sources of supply can also supply some consumers connected to the other power source. In this case, any other consumer must be disconnected (load shedding).
- Radial system with changeover connection as power reserve – full load:
  All consumers are centrally supplied from two to n power sources (stand-alone operation with open couplings). They are rated as such that, if one power source fails, the remaining power sources are capable of additionally supplying all those consumers normally supplied by this power source. No consumer must be disconnected. This means rating the power sources according to the (n–1) principle. With three parallel power sources or more, other supply principles, e.g., the (n–2) principle would also be possible. In this case, these power sources will be rated so that two out of three transformers can fail without the continuous supply of all consumers connected being affected.
- Radial system in an interconnected network
  Individual radial systems, in which the connected consumers are centrally supplied by one power source, are additionally coupled electrically with other radial systems by means of coupling connections. All couplings are normally closed.

Depending on the rating of the power sources in relation to the total load connected, the application of the (n–1) principle, (n–2) principle, etc. can ensure continuous and faultless power supply of all consumers by means of additional connecting lines.

The direction of energy flow through the coupling connections may vary depending on the line of supply, which must be taken into account for subsequent rating of switching/protective devices, and above all for making protection settings.

- Radial system with power distribution via busbars
  In this special case of radial systems that can be operated in an interconnected network, busbar trunking systems are used instead of cables.

In the coupling circuits, these busbar trunking systems are either used for power transmission (from radial system A to radial system B, etc.) or power distribution to the respective consumers.

Quality criterion	LV-side system configurations																								
	Simple radial system					Radial system with changeover connection as power reserve										Radial system in an inter-connected network					Radial system with power distribution via busbars				
						Partial load					Full load														
	1	2	3	4	5	1	2	3	4	5	1	2	3	4	5	1	2	3	4	5	1	2	3	4	5
Low cost of investment	●						●						●						●						●
Low power losses					●			●						●				●				●			
High reliability of supply					●				●				●			●						●			
Great voltage stability					●				●					●		●					●				
Easy operation	●						●					●					●					●			
Easy and clear system protection	●						●					●						●				●			
High adaptability					●				●					●				●			●				
Low fire load			●						●					●					●		●				

Rating: very good (1) to poor (5) fulfillment of a quality criterion

Table 3.3-2: Exemplary quality rating dependent on the power system configuration

1
2
3
4
5
6
7
8
9
10
11
12
?

Power supply systems according to the type of connection to earth

TN-C, TN-C/S, TN-S, IT and TT systems

The implementation of IT systems may be required by national or international standards.

- For parts of installations which have to meet particularly high requirements regarding operational and human safety (e.g., in medical rooms, such as the OT, intensive care or post-anaesthesia care unit).
- For installations erected and operated outdoors (e.g., in mining, at cranes, garbage transfer stations, and in the chemical industry).
- Depending on the power system and nominal system voltage there may be different requirements regarding the disconnection times to be met (protection of persons against indirect contact with live parts by means of automatic disconnection).
- Power systems in which electromagnetic interference plays an important part should preferably be configured as TN-S systems immediately downstream of the point of supply. Later, it will mean a comparatively high expense to turn existing TN-C or TN-C/S systems into an EMC-compatible system.

The state of the art for TN systems is an EMC-compatible design as TN-S system.

Characteristics	TN-C			TN-C/S			TN-S			IT system			TT system		
	1	2	3	1	2	3	1	2	3	1	2	3	1	2	3
Low cost of investment	●				●			●				●	●		
Little expense for system extensions	●				●		●				●				●
Any switchgear/protective technology can be used	●			●			●			●					●
Earth-fault detection can be implemented			●		●		●			●			●		
Fault currents and impedance conditions in the system can be calculated	●			●			●			●					●
Stability of the earthing system	●			●			●			●					●
High degree of operational safety		●			●		●			●					●
High degree of protection	●			●			●			●				●	
High degree of shock hazard protection		●			●			●		●					●
High degree of fire safety		●			●			●		●					●
Automatic disconnection for protection purposes can be implemented	●			●			●			●				●	
EMC-friendly			●		●		●			●				●	
Equipment functions maintained in case of 1st earth or enclosure fault		●			●				●	●					●
Fault localization during system operation		●			●				●	●					●
Reduction of system downtimes by controlled disconnection	●			●					●	●					●

1 = true 2 = conditionally true 3 = not true

Table 3.3-3: Exemplary quality rating dependent on the power supply system according to its type of connection to earth

3.3.2 Dimensioning of power distribution systems

When the basic supply concept for the electricity supply system has been established, it is necessary to dimension the electrical power system. Dimensioning means the sizing and / or rating of all equipment and components to be used in the power system.

The dimensioning target is to obtain a technically permissible combination of switching/protective devices and connecting lines for each circuit in the power system.

Basic rules

In principle, circuit dimensioning should be performed in compliance with the technical rules standards listed in fig. 3.3-2.

Cross-circuit dimensioning

When selected network components and systems are matched, an economically efficient overall system can be designed. This cross-circuit matching of network components may bear any degree of complexity, because subsequent modifications to certain components, e.g., a switching/protective device, may have effects on the neighboring higher-level or all lower-level network sections (high testing expense, high planning risk).

Dimensioning principles

For each circuit, the dimensioning process comprises the selection of one or more switching/protective devices to be used at the beginning or end of a connecting line, and the selection of the connecting line itself (cable / line or busbar connection) after considering the technical features of the corresponding switching/protective devices. For supply circuits in particular, dimensioning also includes rating the power sources.

The objectives of dimensioning may vary depending on the circuit type. The dimensioning target of overload and short-circuit protection can be attained in correlation to the mounting location of the protective equipment. Devices applied at the end of a connecting line can ensure overload protection for this line at best, but not short-circuit protection.

Circuit types

The basic dimensioning rules and standards listed in fig. 3.3-2 principally apply to all circuit types. In addition, there are specific requirements for these circuit types (fig. 3.3-3) that are explained in detail below.

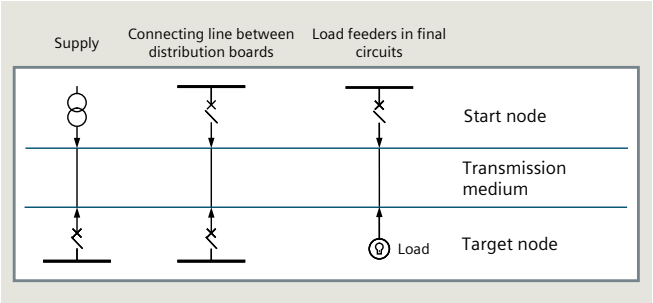

Fig. 3.3-3: Schematic representation of the different circuit types

Overload protection	IEC 60364-4-43	VDE 0100-430
Short-circuit protection	IEC 60364-4-43/ IEC 60364-5-54	VDE 0100-430/ VDE 0100-540
Protection against electric shock	IEC 60364-4-41	VDE 0100-410
Voltage drop	IEC 60364-5-52 IEC 60038	VDE 0100-520 VDE 0175-1
Selectivity	IEC 60364-7-710 IEC 60364-7-718 IEC 60947-2 IEC 60898-1	VDE 0100-710 VDE 0100-718 VDE 0660-101 VDE 0641-11

Fig. 3.3-2: Relevant standards for circuit dimensioning

1
2
3
4
5
6
7
8
9
10
11
12
?

Supply circuits
Particularly stringent requirements apply to the dimensioning of supply circuits. This starts with the rating of the power sources.

Power sources are rated according to the maximum load current to be expected for the power system, the desired amount of reserve power, and the degree of supply reliability required in case of a fault (overload / short circuit).

Load conditions in the entire power system are established by taking the energy balance (in an "energy report"). Reserve power and operational safety in the vicinity of the supply system are usually established by building up appropriate redundancies, for example, by doing the following:

- Providing additional power sources (transformer, generator, UPS).
- Rating the power sources according to the failure principle;
  n- or (n–1) principle: Applying the (n–1) principle means that two out of three supply units are principally capable of continually supplying the total load for the power system without any trouble if the smallest power source fails.
- Rating those power sources that can temporarily be operated under overload (e.g., using vented transformers).

Independently of the load currents established, dimensioning of any further component in a supply circuit is oriented to the ratings of the power sources, the system operating modes configured, and all the related switching states in the vicinity of the supply system.

As a rule, switching/protective devices must be selected in such a way that the planned power maximum can be transferred. In addition, the different minimum/maximum short-circuit current conditions in the vicinity of the supply system, which are dependent on the switching status, must be determined.

When connecting lines are rated (cable or busbar), appropriate reduction factors must be taken into account; these factors depend on the number of systems laid in parallel and the installation type.

When devices are rated, special attention should be paid to their rated short-circuit breaking capacity. In addition, a high-quality tripping unit with variable settings is preferred, because this component is an important foundation for attaining the best possible selectivity toward all upstream and downstream devices.

Distribution circuit
Dimensioning of cable routes and devices follows the maximum load currents to be expected at this distribution level.

As a rule
$I_{B\,max} = \sum$ installed capacity × simultaneity factor

Switching/protective device and connecting line are to be matched with regard to overload and short-circuit protection.

In order to ensure overload protection, the standardized conventional (non-)tripping currents referring to the devices in application have to be observed. A verification based merely on the rated device current or the setting value I_r would be insufficient.

Basic rules for ensuring overload protection

Rated current rule

- Non-adjustable protective equipment
  $I_B \leq I_n \leq I_z$
  The rated current I_n of the selected device must be between the calculated maximum load current I_B and the maximum permissible load current I_z of the selected transmission medium (cable or busbar).
- Adjustable protective equipment
  $I_B \leq I_r \leq I_z$
  The rated current I_r of the overload release must be between the calculated maximum load current I_b and the maximum permissible load current I_z of the selected transmission medium (cable or busbar).

Tripping current rule
$I_2 \leq 1.45 \times I_z$

The maximum permissible load current I_z of the selected transmission medium (cable or busbar) must be above the conventional tripping current $I_2/1.45$ of the selected device.

The test value I_2 is standardized and varies according to the type and characteristics of the protective equipment applied.

1
2
3
4
5
6
7
8
9
10
11
12
?

Basic rules for ensuring short-circuit protection

Short-circuit energy
$K^2S^2 \geq I^2t$
(K = Material coefficient; S = Cross-section)

The amount of energy that is set free when a short circuit occurs – and up to the moment it is cleared automatically – must be less than the energy that the transmission medium can carry as a maximum, or there will be irreparable damage. As a standard, this basic rule applies in the time range up to max. 5 s.

Below 100 ms of short-circuit breaking time, the let-through energy of the switching/protective device (according to the equipment manufacturer's specification) must be taken into account.

When devices with a tripping unit are used, observance of this rule across the entire characteristic device curve must be verified.

A mere verification in the range of the maximum short-circuit current applied ($I_{k\ max}$) is not always sufficient, in particular when time-delayed releases are used.

Short-circuit time
$t_a\ (I_{k\ min}) \leq 5$ s

The resulting current-breaking time of the selected protective equipment must ensure that the calculated minimum short-circuit current $I_{k\ min}$ at the end of the transmission line or protected line is automatically cleared within 5 s at the most.

Overload and short-circuit protection need not necessarily be provided by one and the same device. If required, these two protection targets may be realized by a device combination. The use of separate switching/protective devices could also be considered, i.e., at the start and end of a cable route. As a rule, devices applied at the end of a cable route can ensure overload protection for that line only.

Final circuits
The method for coordinating overload and short-circuit protection is practically identical for distribution and final circuits. Besides overload and short-circuit protection, the protection of human life is also important for all circuits.

Protection against electric shock
$t_a\ (I_{k1\ min}) \leq t_{a\ perm}$

If a 1-phase fault to earth ($I_{k1\ min}$) occurs, the resulting current breaking time t_a for the selected protective equipment must be shorter than the maximum permissible breaking time $t_{a\ perm}$ that is required for this circuit according to IEC 60364-4-41 (VDE 0100-410) to ensure the protection of persons.

Because the required maximum current breaking time varies according to the rated system voltage and the type of load connected (stationary and non-stationary loads), protection requirements regarding minimum breaking times $t_{a\ perm}$ may be transferred from one load circuit to other circuits. Alternatively, this protection target may also be achieved by observing a maximum touch voltage.

Because final circuits are often characterized by long supply lines, their dimensioning is often affected by the maximum permissible voltage drop.

As far as the choice of switching/protective devices is concerned, it is important to bear in mind that long connecting lines are characterized by high impedances, and thus strong attenuation of the calculated short-circuit currents.

Depending on the system operating mode (coupling open, coupling closed) and the medium of supply (transformer or generator), the protective equipment and its settings must be configured for the worst-case scenario for short-circuit currents.

In contrast to supply or distribution circuits, where the choice of a high-quality tripping unit is considered very important, there are no special requirements on the protective equipment of final circuits regarding the degree of selectivity to be achieved. The use of a tripping unit with LI characteristics is normally sufficient.

Summary
Basically, the dimensioning process itself is easy to understand and can be performed using simple means.

Its complexity lies in the procurement of the technical data on the products and systems required. This data can be found in various technical standards and regulations as well as in numerous product catalogs.

An important aspect in this context is the cross-circuit manipulation of dimensioned components owing to their technical data. One such aspect is the above mentioned inheritance of minimum current breaking times of the non-stationary load circuit to other stationary load or distribution circuits.

Another aspect is the mutual impact of dimensioning and network calculation (short circuit), e.g., for the use of short-circuit current-limiting devices.

In addition, the complexity of the matter increases, when different national standards or installation practices are to be taken into account for dimensioning.

For reasons of risk minimization and time efficiency, a number of engineering companies generally use advanced calculation software, such as SIMARIS design, to perform dimensioning and verification processes in electrical power systems.

1
2
3
4
5
6
7
8
9
10
11
12
?

3.3.3 Low-voltage switchboards

When developing a power distribution concept including dimensioning of the systems and devices, its requirements and feasibility have to be matched by the end user and the manufacturer. When selecting a low-voltage main distribution board (LVMD), the prerequisite for its efficient sizing is knowledge of its use, availability, and future options for extension. The demands on power distribution are extremely diverse. They start with buildings that do not place such high demands on the power supply, such as office buildings, and continue through to those with high demands, for example, data centers, where smooth operation is of prime importance.

Because no major switching functions in the LVMD have to be considered in the planning of power distribution systems in commercial buildings and no further extensions are to be expected, a performance-optimized technology with high component density can be used. In these cases, mainly fuse-protected equipment in fixed-mounted design is used. When planning a power distribution system for a production plant, however, system availability, extensibility, control, and visualization are important functions to keep plant downtimes as short as possible. The use of circuit-breaker-protected and fuse-protected withdrawable design is an important principle. Selectivity is also of great importance for reliable power supply. Between these two extremes there is a great design variety that is to be optimally matched to customer requirements. The prevention of personal injury and damage to equipment must, however, be the first priority in all cases. When selecting an appropriate switchboard, it must be ensured that it is a design verified assembly (in compliance with IEC 61439-2, resp. EN 61439-2, VDE 0660-600-2) with extended testing of behavior in the event of an accidental arc (IEC/TR 61641, VDE 0660-500 Addendum 2), and that the selection is always made in light of the regulations governing the entire supply system (full selectivity, partial selectivity).

Overview

The SIVACON S8 low-voltage switchboard (fig. 3.3-4) is a variable, multi-purpose and design verified low-voltage switchgear assembly that can be used for the infrastructure supply not only in administrative and institutional buildings, but also in industry and commerce. SIVACON S8 consists of standardized, modular components that can be flexibly combined to form an economical, overall solution, depending on the specific requirements. Siemens will perform the following:

- The customer-specific configuration
- The mechanical and electrical installation
- The testing, for which design verified function modules are used.

The authorized contracting party will use the specified documentation. SIVACON S8 can be used as a design verified power distribution board system up to 7,000 A.

Fig. 3.3-4: SIVACON S8 switchboard

1
2
3
4
5
6
7
8
9
10
11
12
?

Standards and regulations

SIVACON S8 is a design verified low-voltage switchgear assembly in compliance with IEC 61439-2 (VDE 0660-600-2). SIVACON S8 is resistant to internal arcs, in compliance with IEC/TR 61641 (VDE 0660-500 Addendum 2). SIVACON S8 is available in several mounting designs (fig. 3.3-5).

Circuit-breaker design

The cubicles for installation of 3WL and 3V... circuit-breakers are used for the supply of the switchboard and for outgoing feeders and bus couplers (longitudinal and transversal). The rule that only one circuit-breaker is used for each cubicle applies to the entire circuit-breaker design (fig. 3.3-6).

The device mounting space is intended for the following functions:

- Incoming/outgoing feeders with 3WL air circuit-breakers in fixed-mounted and withdrawable design up to 6,300 A
- Longitudinal and transversal couplers with 3WL air circuit-breakers in fixed-mounted and withdrawable design up to 6,300 A
- Incoming/outgoing feeders with 3V... molded-case circuit-breakers in fixed-mounted design up to 1,600 A, or 3VA molded-case circuit-breakers up to 630 A.

Universal mounting design

The cubicles for cable feeders in fixed-mounted and plug-in design up to 630 A are intended for the installation of the following switching devices (fig. 3.3-7):

- SIRIUS 3RV or 3VA / 3VL circuit-breaker
- 3K switch-disconnector
- 3NP fuse-switch-disconnector
- 3NJ6 fuse-switch-disconnector in plug-in design.

The switching devices are mounted on mounting plates and connected to the vertical current distribution bars on the supply side. Plug-in 3NJ6 in-line switch-disconnectors can be installed using an adapter. The front is covered by cubicle doors or compartment doors. The withdrawable design offers safe and simple handling. Modifications can therefore be carried out quickly, ensuring a high level of system availability. No connection work is required inside the withdrawable compartments.

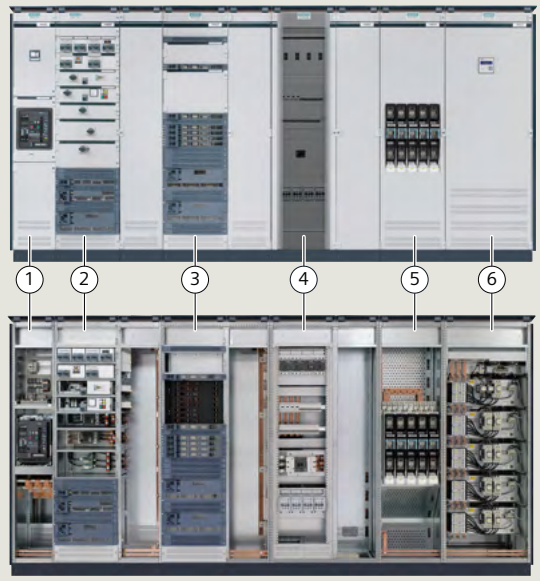

1. Circuit-breaker cubicle with 3WL air circuit-breakers up to 6,300 A or 3V... molded-case circuit-breakers up to 1,600 A
2. Cubicle in universal mounting design motor and cable feeders up to 630 A, withdrawable desing with combination options with fixed-mounted design (compartment door) and 3NJ6 in-line design (plug-in)
3. 3NJ6 in-line design (plug-in) for cable feeders up to 630 A in plug-in design
4. Fixed-mounted cubicle (front panel) for cable feeders up to 630 A and modular installation devices
5. 3NJ4 fuse-switch-disconnectors, in-line type (fixed-mounted design) for cable feeders up to 630 A
6. Reactive-power compensation up to 600 kvar

Fig. 3.3-5: The following mounting designs (1-6) are available

Fig. 3.3-6: Circuit-breaker design

Fig. 3.3-7: Universal mounting design

1
2
3
4
5
6
7
8
9
10
11
12
?

Plug-in 3NJ6 in-line fuse-switch-disconnector design
The cubicles for cable feeders in the plug-in design up to 630 A are intended for the installation of in-line switch-disconnectors. The plug-in contact on the supply side is a cost-efficient alternative to the withdrawable design. The modular design of the plug-ins enables an easy and quick retrofit or replacement under operating conditions. The device mounting space is intended for plug-in, in-line switch-disconnectors with a distance between pole centers of 185 mm. The vertical plug-on distribution busbar system is arranged at the back of the cubicle and is covered by an optional touch protection with pick-off openings in the IP20 degree of protection. This enables the in-line switch-disconnectors to be replaced without shutting down the switchboard (fig. 3.3-8).

Fixed-mounted design with front covers
The cubicles for cable feeders in fixed-mounted design up to 630 A are intended for the installation of the following switching devices (fig. 3.3-9):
- SIRIUS 3RV or 3VL/3VA circuit-breaker
- 3K switch-disconnector
- 3NP fuse-switch-disconnector
- Modular installation devices (assembly kit available).

The switching devices are mounted on infinitely adjustable device holders and connected to the vertical current distribution bars on the supply side. The front of the cubicle has either covers or additional doors (with or without a window).

Fixed-mounted 3NJ4 in-line fuse-switch-disconnector design
The cubicles for cable feeders in fixed-mounted design up to 630 A are intended for the installation of 3NJ4 in-line fuse-switch-disconnectors. With their compact design and modular structure, in-line fuse-switch-disconnectors offer optimal installation conditions with regard to the achievable packing density. The busbar system is arranged horizontally at the back of the cubicle. This busbar system is connected to the main busbar system via cross members. The in-line fuse-switch-disconnectors are screwed directly onto the busbar system (fig. 3.3-10).

Low-voltage main distribution
When selecting a low-voltage main distribution system, the prerequisite for its efficient sizing is knowing about its use, availability, and future options for extension. The requirements for power distribution are extremely diverse.

Normally, frequent switching operations do not need to be considered in the planning of power distribution for commercial, institutional and industrial building projects, and extensions would not generally be expected. For these reasons, a performance-optimized technology with high component density can be used. In these cases, Siemens mainly uses circuit-breaker-protected equipment in fixed-mounted design. When planning a power distribution system for a production plant, however, system availability, extensibility, control, and the visualization of status information and control functions are important issues related to keeping

Fig. 3.3-8: Plug-in 3NJ6 in-line switch-disconnector design

Fig. 3.3-9: Fixed-mounted design with front covers

Fig. 3.3-10: Fixed-mounted 3NJ4 in-line switch-disconnector design

plant downtimes as short as possible. The use of circuit-breaker-protected technology in withdrawable design is essential. Selectivity is also of great importance for reliable power supply. Between these two extremes there is a great design variety that should be optimally matched to the customer requirements. The prevention of personal injury and damage to equipment must, however, always be the first priority. When selecting an appropriate switchboard, it must be ensured that it is a design verified switchgear assembly (in compliance with IEC 61439-2, VDE 0660-600-2), with extended testing of behavior in the event of an internal arcing (IEC/TR 61641, VDE 0660-500 Addendum 2).

Low-voltage main distribution systems should be chosen among those featuring a total supply power up to 3 MVA. Up to this rating, the equipment and distribution systems are relatively inexpensive due to the maximum short-circuit currents to be encountered.

For rated currents up to 3,200 A, power distribution via busbars is usually sufficient if the arrangement of the incoming/outgoing feeder cubicles and coupler cubicles has been selected in a performance-related way. Ambient air temperatures, load on individual feeders, and the maximum power loss per cubicle have a decisive impact on the devices to be integrated and the number of cubicles required, as well as on their component density (number of devices per cubicle).

1
2
3
4
5
6
7
8
9
10
11
12
?

3.3.4 Planning notes for low-voltage switchboards

Installation – clearances and gangway widths

The minimum clearances between switchboard and obstacle as specified by the manufacturer must be observed when installing low-voltage switchboards (fig. 3.3-11). The minimum dimensions for operating and maintenance gangways according to IEC 60364-7-729 (VDE 0100-729) must be taken into account when planning the space required (table 3.3-4, fig. 3.3-12, fig. 3.3-13).

Caution! If a lift truck is used to insert circuit-breakers or withdrawable units, the minimum gangway widths must be matched to the lift truck!

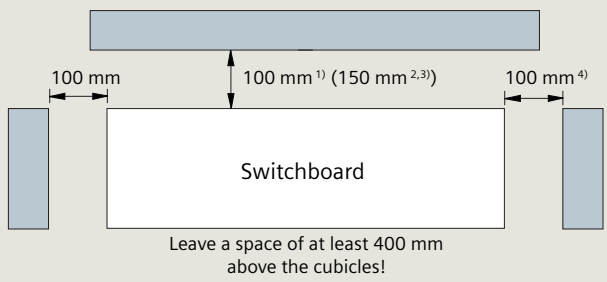

1) Back-to-back installation: 200 mm
2) Only for IP43 (projecting roof plate)
3) Only for IP43 and back-to-back installation: 300 mm
4) When the switchboard is erected (positioning of the right-hand cubicle), the projection of the busbar connecting lugs must be paid attention to.
Top busbar position:
90 mm projection -> recommended wall clearance > 150 mm
Rear busbar position:
54 mm projection -> recommended wall clearance > 100 mm

Attention: All dimensions refer to the frame dimensions ! (nominal cubicle size)

Fig. 3.3-11: Clearances to obstacles

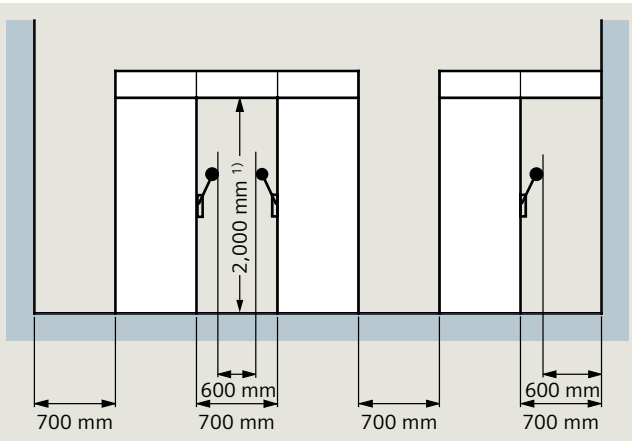

1) Minimum height of passage under covers or enclosures

Fig. 3.3-12: Reduced gangway widths within the area of open doors

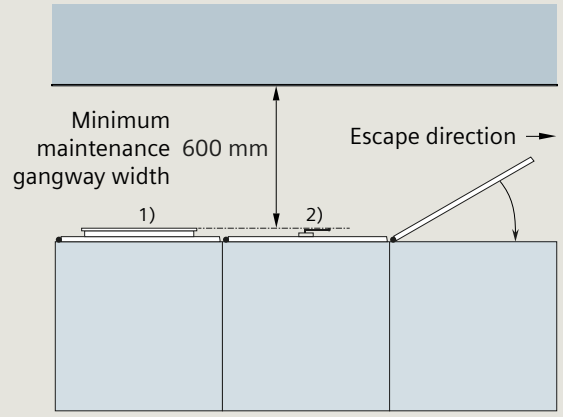

1) Circuit-breaker in the "completely extracted and isolated" position
2) Handles (e.g., for controls or equipment)

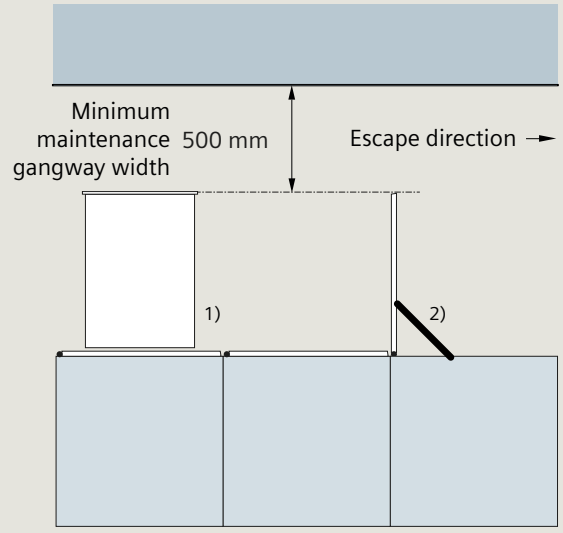

1) Circuit-breaker fully withdrawn
2) Door in arrest position

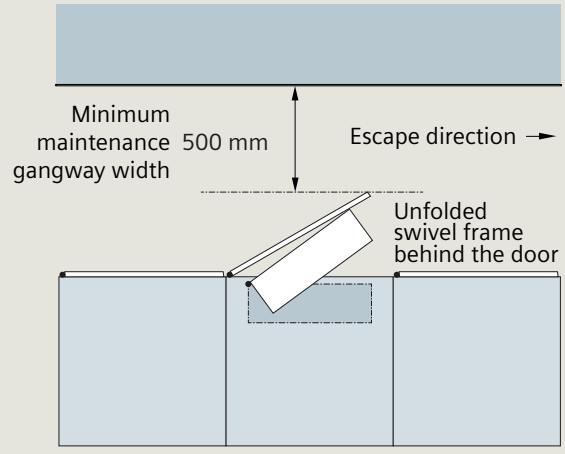

Fig. 3.3-13: Minimum widths of maintenance gangways in accordance with IEC 60364-7-729 (VDE 0100-729)

Cubicle height					
Frame	2,000, 2,200 mm				
Base	Without, 100, 200 mm				
Cubicle width					
Dependent of:	- Cubicle type - Rated device current - Connecting position and/or cable/busbar entry				
Cubicle depth					
Type	Main busbar		Cubicle depth in mm		
	Location	Rated current in A	Front connection		Rear connection
			Entry from the bottom	Entry from the top	
Single front	Top	3,270	500, 800	800	800
		6,300 [1]	800, 1,000	1,200	1,200
	Rear	4,000	600	600	-
		7,010	800	800	-
Double front	Rear	4,000	1,000	1,000	-
		7,010 [1]	1,200	1,200	-
[1] Frame height 2,200 mm					

Table 3.3-4: SIVACON S8 switchboard dimensions

Transport units

Depending on the access routes available in the building, one or more cubicles can be combined into transport units (TU). The max. length of a TU should not exceed 2,400 mm.

Double-front installations

In the double-front installation, the cubicles are positioned in a row next to and behind one another. The main advantage of a double-front installation is the economic design through the supply of the branch circuits on both cubicles from one main busbar system.

The "double-front unit" system structure is required for the assignment of certain modules and consists of a minimum of two and a maximum of four cubicles (fig. 3.3-14). The width of the double-front unit is determined by the widest cubicle (1) within the double-front unit. This cubicle can be placed on the front or rear side of the double-front unit. Up to three cubicles (2), (3), (4) can be placed on the opposite side. The sum of the cubicle widths (2) to (4) must be equal to the width of the widest cubicle (1). The cubicle combination within the double-front unit is possible for all technical installations with the following exceptions.

Exceptions

The following cubicles determine the width of the double-front unit as cubicle (1) and should only be combined with a cubicle for customised solutions without cubicle busbar system:

- Circuit-breaker design - longitudinal coupler
- Circuit-breaker design - incoming/outgoing feeder with 4,000 A and cubicle width 800 mm, 5,000 A, 6,300 A

Cubicles with a width of 350 mm or 850 mm are not provided for within double-front systems.

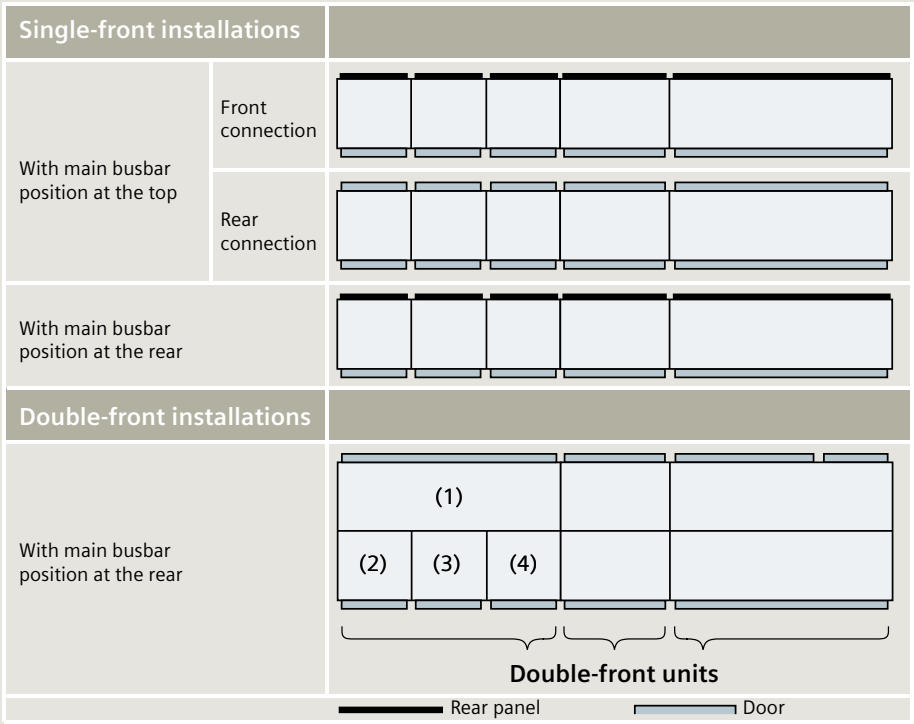

Fig. 3.3-14: Cubicle arrangement for single-front (top) and double-front systems (bottom)

1
2
3
4
5
6
7
8
9
10
11
12
?

Weights

The cubicle weights as listed in table 3.3-5 should be used for the transportation and dimensioning of building structures such as cable basements and false floors.

Environmental conditions for switchboards

The climate and other external conditions (natural foreign substances, chemically active pollutants, small animals) may affect the switchboards to a varying extent. The effect depends on the heating / air-conditioning systems of the switchboard room. In case of higher concentrations of pollutants, pollutant reducing measures are required, for example:

- Air intake for switchboard room from a less contaminated point
- Expose the switchboard room to slight excess pressure (e.g., injecting uncontaminated air into the switchboard)
- Air conditioning of switchboard rooms (temperature reduction, relative humidity < 60%, if necessary, use pollutant filters)
- Reduction of temperature rise (oversizing of switching devices or components such as busbars and distribution bars).

Power losses

The power losses listed in table 3.3-6 are approximate values for a cubicle with the main circuit of functional units for determination of the power loss to be dissipated from the switchboard room.

	Rated current in A		Minimum cubicle width in mm	Approx. weight in kg
Circuit-breaker design with 3WL (withdrawable unit)	630–2,000	Size I	400	340
	2,000–3,200	Size II	600	510
	4,000	Size III	800	770
	4,000–6,300	Size III	1,000	915
Universal mounting design cubicle (incl. withdrawable units, fixed-mounted with front doors)			1,000	400
3NJ4 in-line-type switch-disconnector cubicle (fixed-mounted)			600	360
3NJ6 in-line-type switch-disconnector cubicle (plug-in)			1,000	415
Reactive power compensation cubicle			800	860

Table 3.3-5: Widths and average weights of the cubicles including busbar (without cable)

	Circuit-breaker type	Approx. P_V in W for % of the rated current of the switching device	
		100 %	80 %
Circuit-breaker design with 3WL (withdrawable unit)	3WL1106 630 A Size I	215	140
	3WL1108 800 A Size I	345	215
	3WL1110 1,000 A Size I	540	345
	3WL1112 1,250 A Size I	730	460
	3WL1116 1,600 A Size I	1,000	640
	3WL1220 2,000 A Size II	1,140	740
	3WL1225 2,500 A Size II	1,890	1,210
	3WL1232 3,200 A Size II	3,680	2,500
	3WL1340 4,000 A Size III	4,260	2,720
	3WL1350 5,000 A Size III	5,670	3,630
	3WL1363 6,300 A Size III	8,150	5,220
Universal mounting design cubicle (incl. withdrawable units, fixed-mounted with front doors)			600 W
3NJ4 in-line-type switch-disconnector cubicle (fixed-mounted))			600 W
3NJ6 in-line-type switch-disconnector cubicle (plug-in)			1,500 W
Fixed-mounted design cubicle with front covers			600 W
Reactive power compensation cubicle		unchoked choked	1.4 W / kvar 6.0 W / kvar

Table 3.3-6: Power loss generated per cubicle (average values)

1
2
3
4
5
6
7
8
9
10
11
12

Arc resistance

Internal arcs may be caused by wrong rating, decreasing insulation, pollution as well as handling mistakes. Their effects, caused by high pressure and extremely high temperatures, can have fatal consequences for the operator and the system which may even extend to the building. SIVACON S8 offers evidence of personal safety (fig. 3.3-15) through special testing under arcing conditions in accordance with IEC/TR 61641 (VDE 0660-500 Addendum 2).

Active protection measures, such as the high-quality insulation of live parts (e.g., busbars), standardized and simple operation, prevent arc faults and associated personal injuries. Passive protections also increase personal and system safety. These include: arc-resistant hinge and lock systems, the safe operation of withdrawable units and circuit-breakers behind a closed door, as well as patented swing check valves behind ventilation openings on the front, arc fault barriers and arc detection devices combined with a fast-switching 3WL ACB to clear the fault.

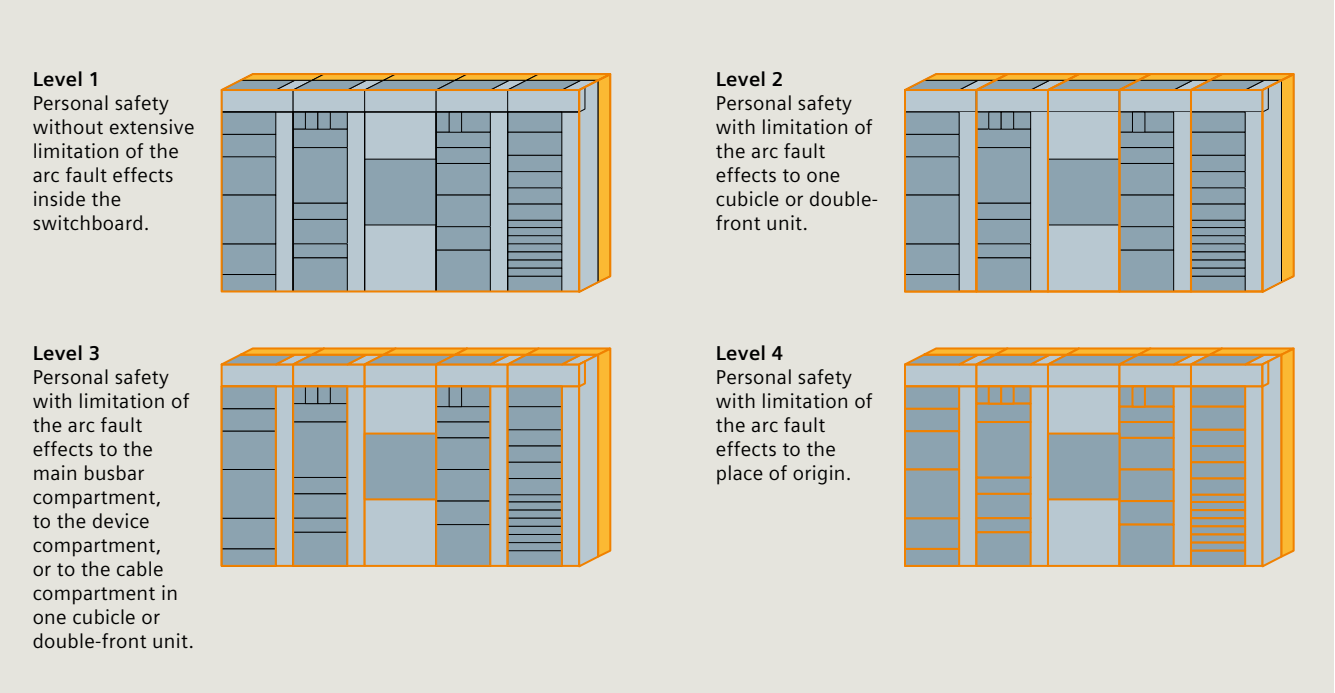

Fig. 3.3-15: The arc protection levels describe the classification in accordance with the characteristics under arc fault conditions, as well as the limitation of the effects of an arc on the entire switchboard or parts thereof

3.3.5 Low-voltage switchboard – cubicle types and examples

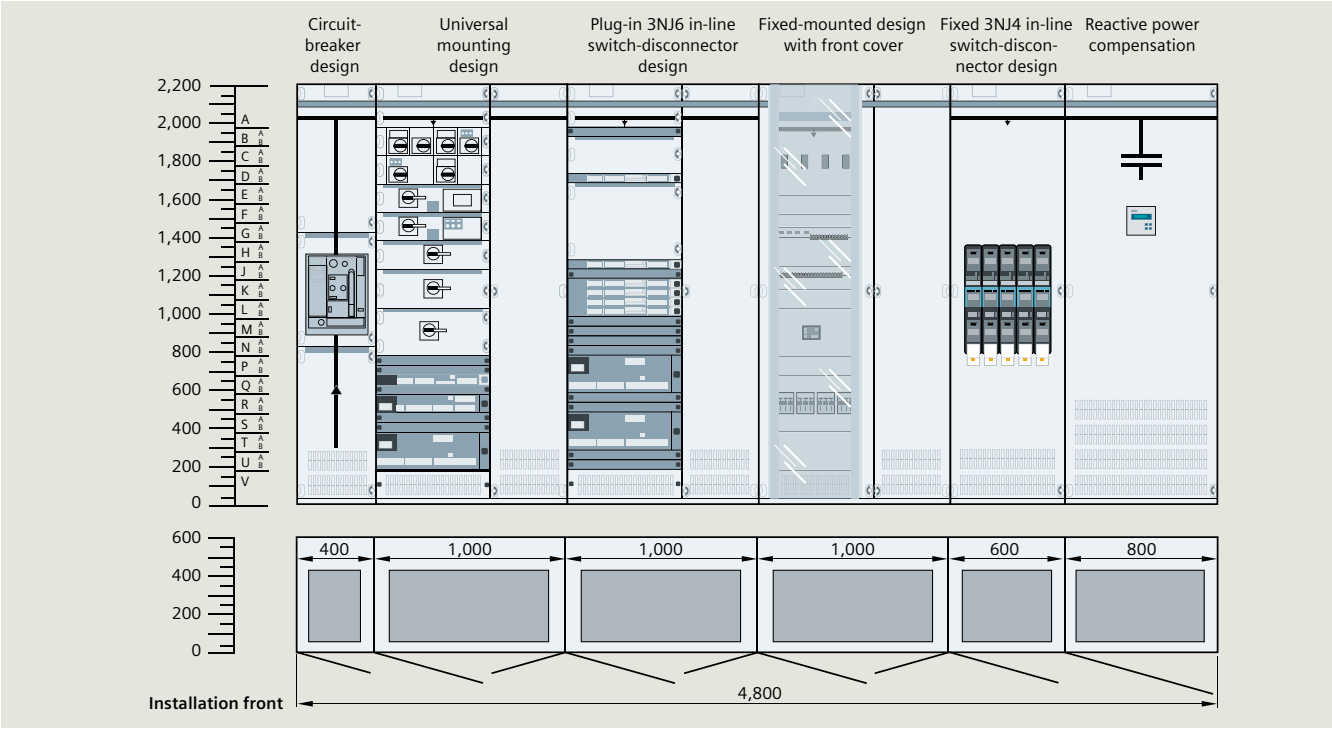

Fig. 3.3-16: SIVACON S8, busbar position at the rear, 2,200 × 4,800 × 600 (H × W × D in mm)

Cubicle type	Circuit-breaker design	Universal mounting design	In-line design, plug-in	Fixed-mounted design	3NJ4 in-line switch-disconnector design	Reactive power compensation
Mounting design	Withdrawable design Fixed-mounted design	Withdrawable design Fixed-mounted design with compartment doors Plug-in design	Plug-in design	Fixed-mounted design with front covers	Fixed-mounted design	Fixed-mounted design
Functions	Incoming feeder Outgoing feeder Coupler	Cable feeders Motor feeders (MCC)	Cable feeder	Cable feeder	Cable feeder	Central compensation of the reactive power
Current I_n	Up to 6,300 A	Up to 630 A	Up to 630 A	Up to 630 A	Up to 630 A	Unchoked up to 600 kvar Choked up to 500 kvar
Connection	Front or rear	Front or rear	Front	Front	Front	Front
Cubicle width in mm	400 / 600 / 800 / 1,000 / 1,400	600 / 1,000 / 1,200	1,000 / 1,200	1,000 / 1,200	600 / 800 / 1,000	800
Forms of internal separation	1, 2b, 3a, 4b 4 Type 7 (BS)	3b, 4a, 4b, 4 Type 7 (BS)	3b, 4b	1, 2b, 3b, 4a, 4b	1, 2b	1, 2b
Busbar position	Top, rear	Top, rear	Top, rear	Top, rear	Rear	Without, top, rear

Table 3.3-7: Various mounting designs according to panel types

For further information:
siemens.com/sivacon-s8

3.3.6 Subdistribution systems

General

Subdistribution systems, as an essential component for the reliable power supply to all consumers of a building, are used for the distributed supply of circuits. From the subdistribution boards, cables either lead directly or via earth contact outlets to the consumer. Protective devices are located within the subdistribution systems.

These are:
- Fuses
- Miniature circuit-breakers
- RCD (residual current devices)
- Circuit-breakers
- Overvoltage protection.

They provide protection against personal injury and protect:
- Against excessive heating caused by non-permissible currents
- Against the effects of short-circuit currents and the resulting mechanical damage.

In addition to the protective devices, a subdistribution system also contains devices for switching, measuring and monitoring. These are:
- Disconnectors
- KNX/EIB components
- Outlets
- Measuring instruments
- Switching devices
- Transformers for extra-low voltages
- Components of the building control systems.

Configuration

The local environmental conditions and all operating data have utmost importance for the configuration of the subdistribution systems. The dimensioning is made using the following criteria:

Ambient conditions
- Dimensions
- Mechanical stress
- Exposure to corrosion
- Notes concerning construction measures
- Wiring spaces
- Environmental conditions.

Electrical data
- Rated currents of the busbars
- Rated currents of the supply circuits
- Rated currents of the branches
- Short-circuit strength of the busbars
- Rating factor for switchboard assemblies
- Heat loss.

Protection and installation type
- Degree of protection
- Observance of the upper temperature limit
- Protective measures
- Installation type (free-standing, floor-mounted distribution board, wall-mounted distribution board)
- Accessibility, e.g., for installation, maintenance and operation.

Type of construction
- Number of operating faces
- Space requirements for modular installation devices, busbars and terminals
- Supply conditions.

The number of subdistribution boards in a building is determined using the following criteria:

Floors
A high-rise building normally has at least one floor distribution board for each floor. A residential building normally has one distribution system for each apartment.

Building sections
If a building consists of several sections, at least one subdistribution system is normally provided for each building section.

Departments
In a hospital, separate subdistribution systems are provided for the various departments, such as surgery, OP theater, etc.

Safety power supplies
Separate distribution boards for the safety power supply are required for supplying the required safety equipment. Depending on the type and use of the building or rooms, the relevant regulations and guidelines must be observed, such as IEC 60364-7-710 and -718 (VDE 0100-710 and -718) and the MLAR (Sample Directive on Fireproofing Requirements for Line Systems) in Germany.

Standards to be observed for dimensioning
- IEC 60364-1 (VDE 0100-100) Low-voltage electrical installations, part 1: Fundamental principles, assessment of general characteristics, definitions
- IEC 60364-4-41 (VDE 0100-410) Protection against electric shock
- IEC 60364-4-43 (VDE 0100-430) Protection against overcurrent
- IEC 60364-5-51 (VDE 0100-510) Selection and erection of electrical equipment; common rules
- IEC 60364-5-52 (VDE 0100-520) Wiring systems
- VDE 0298-4 Recommended values for the current-carrying capacity of sheathed and non-sheathed cables
- VDE 0606-1 Connecting materials up to 690 V, part 1 – Installation boxes for accommodation of equipment and/or connecting terminals
- DIN 18015-1 Electrical systems in residential buildings, part 1 planning principles.

3.3.7 Busbar trunking systems

General

When a planning concept for power supply is developed, it is not only imperative to observe standards and regulations, it is also important to discuss and clarify economic and technical interrelations. The rating and selection of electric equipment, such as distribution boards and transformers, must be performed in such a way that an optimum result for the power supply system as a whole is kept in mind rather than focusing on individual components.

All components must be sufficiently rated to withstand normal operating conditions as well as fault conditions. Further important aspects to be considered for the creation of an energy concept are:

- Type, use and shape of the building (e.g., high-rise building, low-rise building, multi-storey building)
- Load centers and possible power transmission routes and locations for transformers and main distribution boards
- Building-related connection values according to specific area loads that correspond to the building's type of use
- Statutory provisions and conditions imposed by building authorities
- Requirements of the power distribution network operator.

The result will never be a single solution. Several options must be assessed in terms of their technical and economic impacts. The following requirements are the main points of interest:

- Easy and transparent planning
- Long service life
- High availability
- Low fire load
- Integration in energy management systems
- Future-proof investment
- Flexible adaptation to changes in the building.

Most applications suggest the use of suitable busbar trunking systems (BTS) to meet these requirements. For this reason, engineering companies increasingly prefer busbar trunking to cable installation for power transmission and distribution.Siemens offers BTS (fig. 3.3-17) ranging from 40 A to 6,300 A:

- The BD01 system from 40 to 160 A for the supply of light fixtures as well as workshops with tap-offs up to 63 A
- The BD2 system from 160 to 1,250 A for supplying medium-size consumers in buildings and industry
- The ventilated LD system from 1,100 to 5,000 A for power transmission and power distribution at production sites with a high energy demand as well as on ships or in wind turbines
- The LI system in sandwich design from 800 to 6,300 A is a design verified solution according to IEC 61439-1/-6 (VDE 0660-600-1/-6), mainly used for power transmission irrespective to the mounting position in buildings, data centers, or industrial applications with the requirements of degree of protection up to IP66, low fire load, and special conductor configurations such as double N or insulated PE
- The encapsulated LR system from 400 to 6,150 A for power transmission under extreme environmental conditions (IP68).

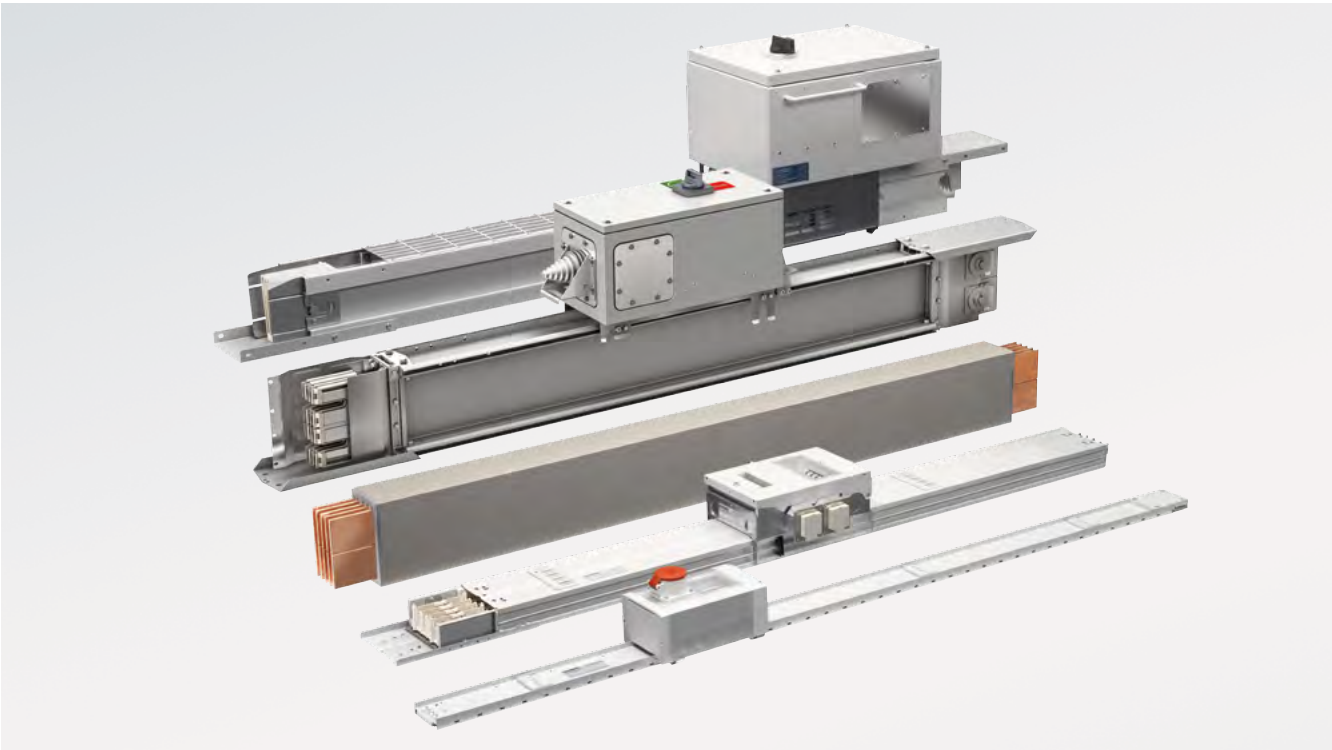

Fig. 3.3-17: Busbar trunking systems

Planning notes

Considering the complexity of modern building projects, transparency and flexibility of power distribution are indispensable requirements. In industry, the focus is on continuous supply of energy as an essential prerequisite for multi-shift production. Busbar trunking systems meet all these requirements on efficient power distribution by being easily planned, quickly installed, and providing a high degree of flexibility and safety. The advantages of busbar trunking systems are:

- Straightforward network configuration
- Low space requirements
- Easy retrofitting in case of changes of locations and consumer loads
- High short-circuit rating and low fire load
- Increased planning security.

Power transmission

Electrical energy from the transformer to the low-voltage switchboard is transmitted by suitable components in the busbar trunking system. These components are installed between transformer and main distribution board, then branching to subdistribution systems.

Trunking units without tap-off points are used for power transmission. These are available in standard lengths. Besides the standard lengths, the customer can also choose a specific length from various length ranges to suit individual constructive requirements.

Power distribution

Power distribution is the main area of application for busbar trunking systems. This means that electricity cannot just be tapped from a permanently fixed point as with a cable installation. Tap-off points can be varied and changed as desired within the entire power distribution system.

In order to tap electricity, the only thing required is to plug a tap-off unit on the busbar at the tap-off point. This way a variable distribution system is created for linear and / or area-wide, distributed power supply. Tap-off points are provided on either or just one side on the straight trunking units.

For each busbar trunking system, a wide range of tap-off units is available for the connection of equipment and electricity supply.

Configuration

For the configuration of a busbar system, the following points are to be noted:

- Calculation / dimensioning:
  - Electrical parameters, such as rated current, voltage, given voltage drop and short-circuit rating at place of installation.
- Technical parameters of the busbar systems:
  - The conductor configuration depends on the mains system according to type of earth connection
  - Reduction factors, e.g., for ambient air temperature, type of installation, busbar position (vertical, horizontal edgewise or flat), and degree of protection
  - Copper is required as conductor material; otherwise, aluminum has advantages such as weight, price, etc.
  - How is the system supply to be carried out: as a design verified solution (according to IEC 61439-6 / VDE 0660-600-6) directly from the distribution board or by means of cables at the end or center of the busbar
  - Max. cable connection options to infeed and tap-off units
  - Power and size of the tap-off units including installation conditions
  - Number of tap-off points
  - Use of bus systems possible
  - Influence of a magnetic field (hospitals, broadcasting studios)
  - Environmental conditions, especially ambient air temperature (e.g., where there are fire compartments in each floor of a vertical shaft).
- Structural parameters and boundary conditions:
  - Phase response (changes of direction in the busbar routing possible, differences in height, etc.)
  - Functional sections (e.g., various environmental conditions or various uses)
  - Check use in sprinkler-protected building sections
  - Fire areas (provision of fire barriers –> what structural (e.g., type of walls) and fire fighting (local provisions) boundary conditions are there?
  - Fire protection classes (EI90 and EI120 according to EN 13501-2) of the fire barriers
  - Functional endurance classes (E60, E90, E120) and certifications of the busbar systems (observe relevant deratings)
  - Fire loads / halogens (prescribed fire loads in certain functional sections, e.g., fire escape routes, must not be exceeded).

POWEREN.IR

Fixing of the busbar systems to the structure:
- Maximum clearance from fixings taking into consideration location, weight of system and additional loads such as tap-off units, lighting, etc.
- Agreement on possible means of fixing with structural analyst
- Use of tested fixing accessories for busbar systems with functional endurance
- Observe derating for type of installation.

Dimensions of the distribution board, system supplies and tap-off units:
- Installation clearance from ceiling, wall and parallel systems for the purpose of heat dissipation and installation options
- Crossing with other installations (water, gas pipes, etc.)
- Swing angle for installing and operating the tap-off units
- Minimum dimensions for changes of direction in the busbar routing, fire protection compartmentalization, wall cutouts
- Space requirement for distribution connection
- Cutout planning (sizes and locations of the cutouts)
- Linear expansion (expansion units, if applicable).

A comparison between busbar and cable solution is summarized in table 3.3-8 and fig. 3.3-18.

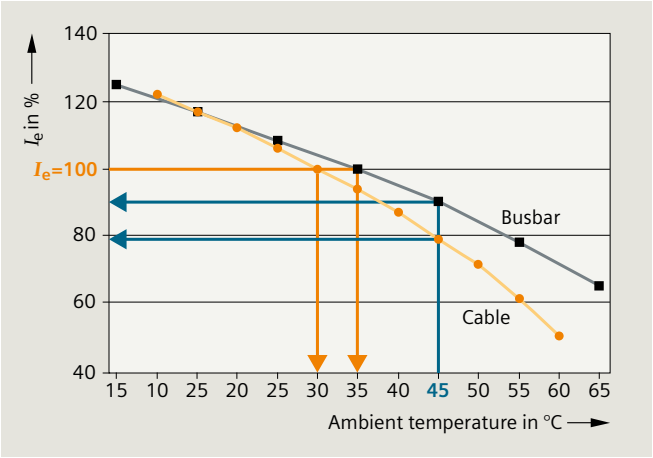

Fig. 3.3-18: Comparison of temperature response and derating

Characteristic	Cable	Busbar
Planning, calculation	High determination and calculation expense; the consumer locations must be fixed	Flexible consumer locations; only the total load is required for the planning
Expansions, changes	High expense, interruptions to operation, calculation, risk of damage to the insulation	Low expense as the tap-off units can be plugged on/off while energized [1)]
Space requirements	More space required because of bending radii and the spacing required between parallel cables	Compact directional changes and fittings
Temperature responses and derating	Limits depend on the laying method and cable accumulation. The derating factor must be determined / calculated	Design verified switchgear assembly; limits from catalog
Halogen-free	PVC cables are not halogen-free; halogen-free cable is very expensive	Principally halogen-free
Fire load	Fire load with PVC cable is up to 10 times greater, with PE cable up to 30 times greater than with busbars	Very low, see planning manual
Design verified switchgear assembly	The operational safety depends on the design	Tested system, non-interchangeable assembly

[1)] In accordance with EN 50110-1 (VDE 0105-1); national regulations and standards must be observed

Table 3.3-8: Comparison between busbar and cable

1
2
3
4
5
6
7
8
9
10
11
12
?

3.3.8 Benefits and data of the busbar trunking systems

BD01 system 40 A –160 A

The BD01 system (fig. 3.3-19) is the BTS for power distribution in trade and industry:

- High degree of protection up to IP55
- Flexible power supply
- Easy and fast planning
- Time-saving installation
- Reliable mechanical and electrical cables and connections
- High stability, low weight
- Small number of basic modules
- Modular system reduces stock-keeping
- Variable changes of direction
- Multi-purpose tap-off units
- Forced opening and closing of the tap-off point.

It is designed for applications from 40 to 160 A. Five current ratings are available for only one size, i.e., all other components can be used for all five rated currents irrespective of the power supply. The system is used primarily to supply smaller consumers, e.g., in workshops.

1. Trunking unit

- 4-conductor (L1, L2, L3, N, PE = housing)
- Degree of protection: IP50, IP54, IP55
- Standard lengths: 2 m and 3 m
- Rated current: 40 A, 63 A, 100 A, 125 A, 160 A
- Spacing of the tap-off points: 0.5 m and 1 m
- Rated operational voltage: 400 V AC.

2. Junction unit

- Changes of direction in the busbar routing possible: flexible, length 0.5 m and 1 m.

3. Feeding unit

- Universal system supply.

4. Tap-off unit

- Up to 63 A, with fuses or miniature circuit-breaker (MCB) and with fused outlets
- With fittings or for customized assembly
- For 3,4, or 8 modular widths
- With or without assembly kit.

5. Ancillary equipment unit

- For 4 or 8 modular widths
- With or without assembly unit
- With or without outlet installed.

6. Possible supplementary equipment

- Assembly kits for degree of protection IP55
- Fixing and suspension
- Coding set
- Fire barrier kit (fire safety for 90 minutes according to European Standards).

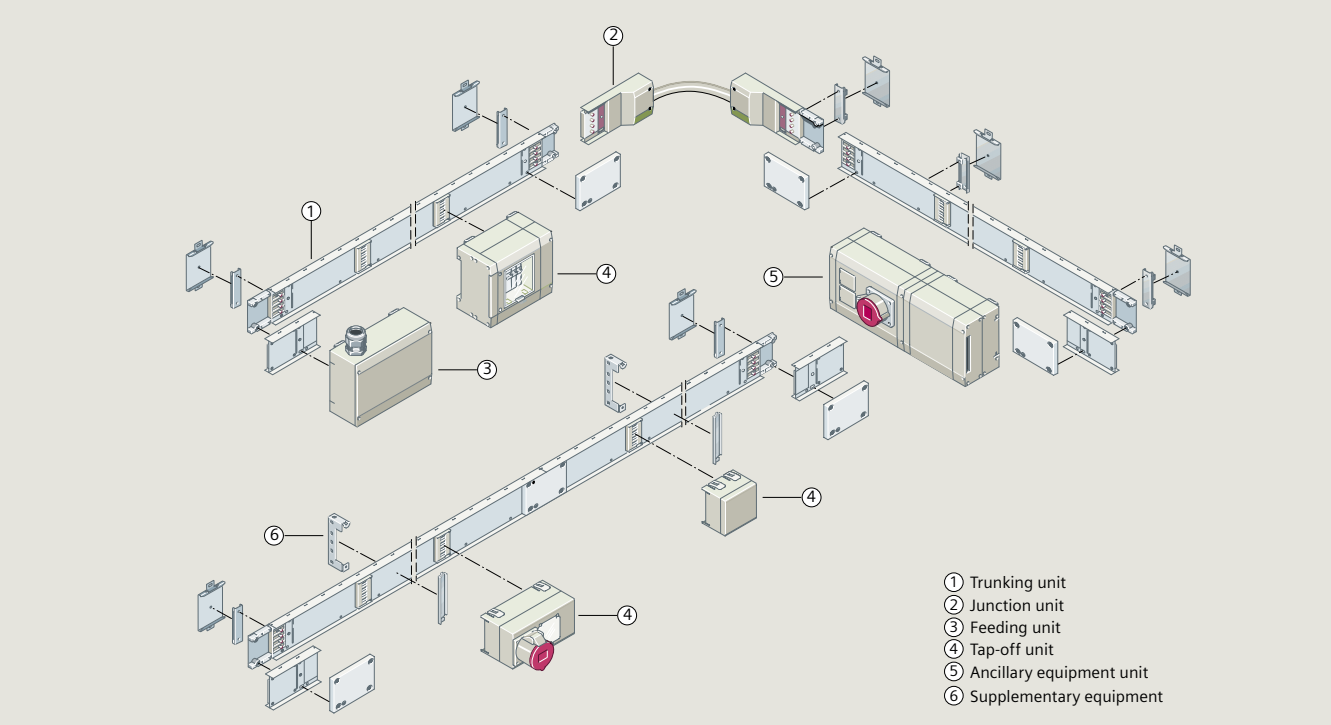

Fig. 3.3-19: System components for BD01 system

BD2 system 160 A –1,250 A

The BD2 system (fig. 3.3-20) is used for power distribution in the aggressive industrial environment:

- High degree of protection up to IP55
- Easy and fast planning
- Time-saving and economic installation
- Safe and reliable operation
- Flexible, modular system providing simple solutions for every application
- Advance power distribution planning without precise knowledge of device locations
- Ready to use in no time thanks to fast and easy installation
- Innovative design: expansion units to compensate for expansion are eliminated
- Tap-off units and tap-off points can be coded at the factory
- Uniformly sealable.

The choice of aluminum or copper as busbar material allows for universal use. It has not only been designed to provide flexible power supply and distribution for consumers in trade and industry, but it can also be used for power transmission from one supply point to another. In addition, the BD2 system is used as rising power supply system in multi-storey buildings, and since a large number of changes of direction in the busbar routing are possible, it can be adapted to the building geometries perfectly.

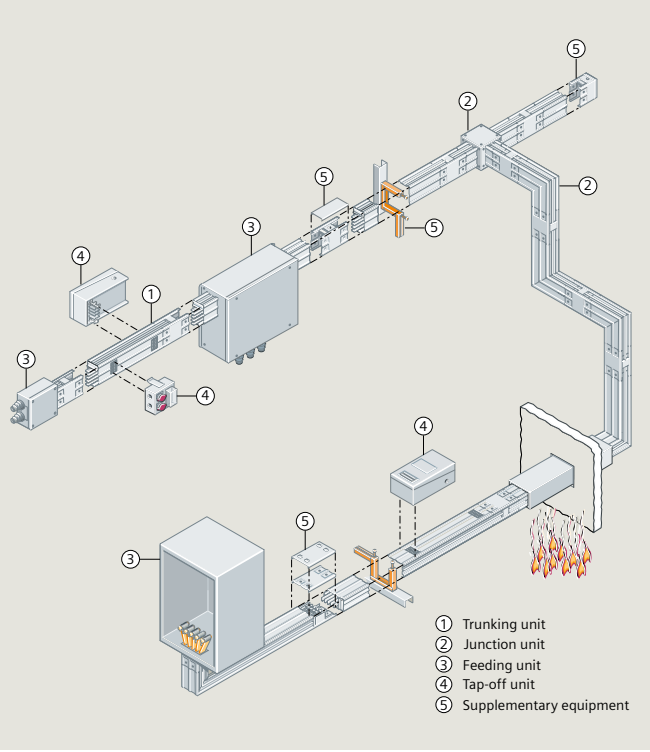

Fig. 3.3-20: System components for BD2 system

1. Trunking unit

- 5-conductor (L1, L2, L3, N, PE or with half PE)
- Degree of protection: IP52, IP54, IP55
- Busbar material: copper or aluminum
- Rated current:
  160 A, 250 A, 400 A (68 mm × 167 mm)
  630 A, 800 A, 1,000 A, 1,250 A (126 mm × 167 mm)
- Standard lengths: 3.25 m, 2.25 m, and 1.25 m
- Lengths available: from 0.5 m to 3.24 m
- Tap-off points:
  – without
  – on both sides (0.25 or 0.5 m apart)
- Fire protection: fire safety classes (90 and 120 minutes) according to European Standards.

2. Junction unit

- Edgewise or flat position
- With or without fire protection
- Elbow unit with or without user-configurable bracket
- Z-unit
- T-unit
- Cross unit
- Flexible changes of direction in the busbar routing possible up to 800 A.

3. Feeding unit

- Feeding from one end
- Center feeding
- Bolt-type terminal
- Cable entry from 1,2, or 3 sides
- Distribution board feeding.

4. Tap-off unit

- 25 A to 530 A
- With fuse, miniature circuit-breaker (MCB) or fused outlet installed.

5. Ancillary equipment unit

- For 8 modular widths
- With or without assembly unit.

6. Possible supplementary equipment

- End flange
- Terminal block
- For fixing:
  – Universal fixing clamp for edgewise or flat position
  – Fixing elements for vertical phases, for fixing to walls or ceilings.

LD system 1,100 A – 5,000 A

The LD system (fig. 3.3-21) fits for power distribution in industrial environments:

- High degree of protection up to IP54 (sprinkler-suitable)
- Easy and fast installation
- Safe and reliable operation
- Space-saving, compact design, up to 5,000 A in one housing
- Tap-off units up to 1,250 A
- Design verified connection to distribution board and transformers.

The LDA / LDC system is used both for power transmission and power distribution. A special feature of the system is a high short-circuit rating, and it is particularly suitable for connecting the transformer to the low-voltage main distribution and then to the subdistribution system. When there is a high power demand, conventional current conduction by cable means that parallel cables are frequently necessary. Here, the LD system allows optimal power distribution with horizontal and vertical phase responses. The system can be used in industry as well as for relevant infrastructure projects, such as hospitals, railroad stations, airports, trade fairs, office blocks, etc.

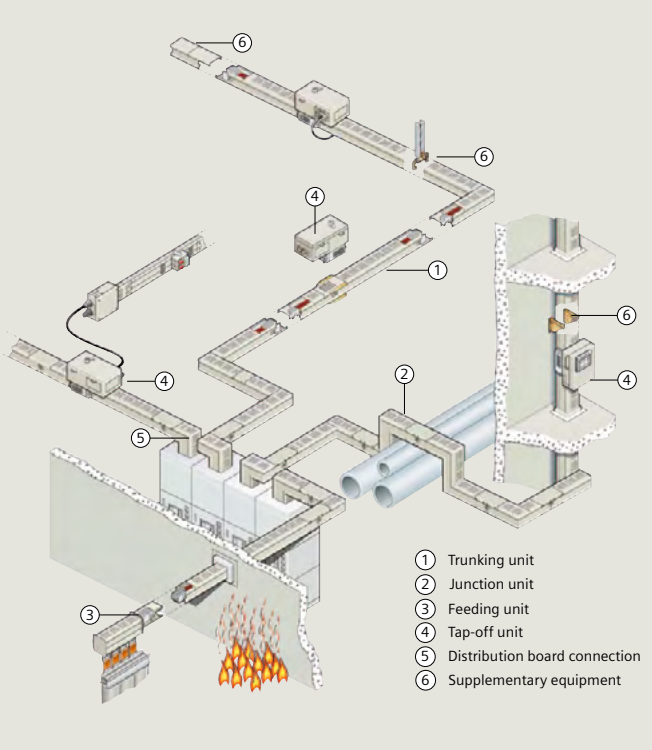

Fig. 3.3-21: System components for LDA/LDC system

1. Trunking unit

- 4- and 5-conductor system
- Busbar material: copper or aluminum
- Rated current: 1,100 to 5,000 A
- LD...1 to LD...3 (180 mm × 180 mm)
- LD...4 to LD...8 (240 mm × 180 mm)
- Degree of protection: IP34 and IP54
- Standard lengths: 1.6 m, 2.4 m, and 3.2 m
- Lengths available: from 0.5 m to 3.19 m
- Tap-off points:
  - Without
  - With user-configurable tap-off points
- Fire barriers (fire resistance for 120 minutes according to European Standards).

2. Junction unit

- With or without fire barrier
- Elbow unit with or without user-configurable bracket
- Z-unit
- U-unit
- T-unit.

3. Tap-off unit

- Degree of protection IP30 and IP54
- With fuse-switch-disconnector from 125 A to 630 A
- With circuit-breaker from 100 A to 1,250 A
- Leading PEN or PE connector
- Switching to load-free state following defined, forced-operation sequences
- Suspension and fixing bracket.

4. Feeding unit

- Cable feeding unit
- Universal terminal for transformers.

5. Terminal units for connection to distribution board

- TTA distribution connection to the SIVACON system from the top/bottom
- Terminals for external distribution boards.

6. Possible supplementary equipment

- End flange
- Terminal block.

1
2
3
4
5
6
7
8
9
10
11
12
?

LI system 800 A – 6,300 A

The LI system (fig. 3.3-22) is used for power transmission and distribution in buildings, data centers, and industrial applications:

- High degree of protection of IP55 as a standard
- Hook and bolt connection with shear-off nut for optimized connection of the busbar trunkings
- Side-by-side double body system for compact construction
- Low fire load
- Safe and reliable operation with high short-circuit ratings
- Flexibility of tap-off units (up to 1,250 A); for example with communication-capable measuring devices
- Design-verified BTS system with design-verified connections to transformers and SIVACON S8 switchboards
- Standard interfaces to cast-resin LR system of Siemens for outdoor use
- Integration of measuring devices in a rotatable box added to tap-off units possible.

Special features of the LIA / LIC system include high flexibility and position insensitivity, and it is particularly suitable for power distribution in high-rise buildings and data centers. The high degree of protection IP55, which is standard for this system, and tap-off units up to 1,250 A also guarantee a safe supply if there is a high energy demand. It can be used in industry as well as for other relevant infrastructure projects such as hospitals, railroad stations, airports, sports venues, etc.

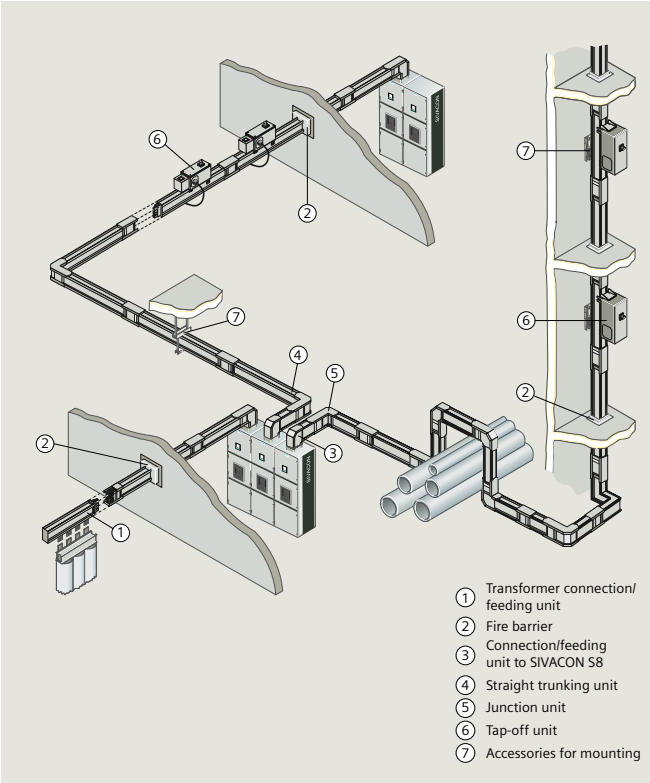

Fig. 3.3-22: System components for LIA/LIC system

1. Trunking unit

- Single and double bodies with 3 to 6 bars in one housing, resp. 6 to 12 bars in two housings
- Conductor configurations for all grid types, with 100 % or double N, 50 % or 100 % PE as well as a Clean Earth solution (insulated PE conductor for a clean PE, CPE)
- Busbar material: copper or aluminum
- Insulation material: Mylar
- Rated current: 800 up to 6,300 A
- For sizes, see table 3.3-9, two pages later
- Degree of protection: IP55*)
- Selectable lengths: available from 0.5 m to 3 m on a 1 cm scale
- Layout: horizontal and vertical without derating
- 3 tap-off points at 3 m length:
  - On one side
  - On both sides
- Fire protection: Fire barriers according to class EI90 and EI120 (categories of EN 13501-2) according to EN 1366-3 are available.

2. Junction unit

- With or without fire barrier
- Various elbow, knee and offset units are available, with either standard or customized dimensions and angles.

3. Modular tap-off units

- Degree of protection IP55*)
- With fuse-switch-disconnector from 125 A to 630 A
- With circuit-breaker from 50 A to 1,250 A
- With measuring device in an additional rotatable box
- Can be plugged on / off in accordance with EN 50110-1 (VDE 0105-1; national regulations and standards must be observed) while energized up to 1,250 A
- Leading PEN or PE conductor
- Switching to load-free state following defined, forced-operation sequences
- Suspension and fixing bracket.

4. Feeding unit

- Cable feeding unit
- Universal terminal for transformers.

5. Terminal units for connection to distribution board

- Design-verified connection to the SIVACON S8 system from the top / bottom
- Flanged end.

**) For transmission: IP66*

1
2
3
4
5
6
7
8
9
10
11
12
?

LR system 400 A – 6,150 A

The LRA/LRC system (fig. 3.3-23) is used for power transmission under extreme ambient conditions (IP68):

- Reliable and safe operation
- Fast and easy installation
- Cast-resin system up to 6,150 A
- Safe connection to distribution boards and transformers
- High degree of protection IP68 for outdoor applications.

A special feature of the system is high resistance to external influences of chemical and corrosive substances, and it is particularly suitable for use outdoors and in environments with high air humidity. The high degree of protection IP68 is guaranteed with the encapsulated epoxy cast-resin housing and serves to provide reliable power transmission when there is a high energy demand. The system can be used in industry as well as for relevant infrastructure projects such as railroad stations, airports, office blocks, etc.

1. Trunking unit

- 4- and 5-conductor system
- Busbar material: copper or aluminum
- Degree of protection: IP68
- User-configurable lengths: from 0.30 m to 3.00 m
- For sizes see table 3.3-10 on next page
- Layout: horizontal and vertical without derating
- Fire barriers (fire resistance for 120 minutes according to European Standards).

2. Junction unit

- With or without fire barrier
- Elbow unit with or without offset
- Z-unit
- T-unit.

3. Feeding unit and distribution board connection

- Universal terminals for transformers, external distribution boards and cable connection.

4. Possible supplementary equipment

- End flange
- Terminal block
- Tap-off point every 1 m, on one side; tap-off unit on request
- Adapters to the LI and LD systems.

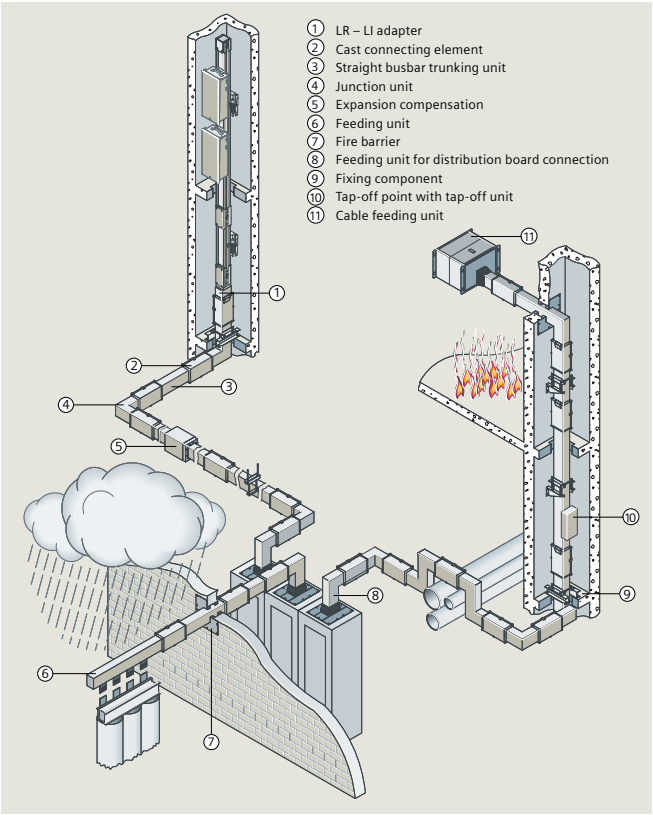

Fig. 3.3-23: System components for LRA / LRC system

POWEREN.IR

1
2
3
4
5
6
7
8
9
10
11
12
?

Single body (width 155 mm)					
Al			Cu		
I_e [A]	System	Height in mm	I_e [A]	System	Height in mm
800	LIA0800	111	1,000	LIC1000	111
1,000	LIA1000	132	1,250	LIC1250	117
1,250	LIA1250	146	1,600	LIC1600	146
1,600	LIA1600	182	2,000	LIC2000	174
2,000	LIA2000	230	2,500	LIC2500	213
2,500	LIA2500	297	3,200	LIC3200	280
Double body (width 410 mm)					
Al			Cu		
I_e [A]	System	Height in mm	I_e [A]	System	Height in mm
3,200	LIA3200	182	4,000	LIC4000	174
4,000	LIA4000	230	5,000	LIC5000	213
5,000	LIA5000	297	6,300	LIC6300	280

Table 3.3-9: Sizes for LIA/LIC system

Al system				
I_e in A	System	Width in mm		Height in mm
		4-conductor system	5-conductor system	
400	LRA01	90	90	90
630	LRA02	90	90	90
800	LRA03	90	90	90
1,000	LRA04	100	120	110
1,200	LRA05	100	120	130
1,400	LRA06	100	120	150
1,600	LRA07	100	120	190
2,000	LRA08	100	120	230
2,500	LRA09	100	120	270
3,200	LRA27	100	120	380
4,000	LRA28	100	120	460
4,600	LRA29	100	120	540
Cu system				
I_e in A	System	Width in mm		Height in mm
		4-conductor system	5-conductor system	
630	LRC01	90	90	90
800	LRC02	90	90	90
1,000	LRC03	90	90	90
1,350	LRC04	100	120	110
1,600	LRC05	100	120	130
1,700	LRC06	100	120	150
2,000	LRC07	100	120	190
2,500	LRC08	100	120	230
3,200	LRC09	100	120	270
4,000	LRC27	100	120	380
5,000	LRC28	100	120	460
6,150	LRC29	100	120	540

Table 3.3-10: Sizes for LRA/LRC system

Communication-capable BTS

Communication-capable functional extensions to be combined with known tap-off units:

- For use with the systems BD01, BD2, LD, and LI
- Applications:
  - Large-scale lighting control
  - Remote switching and signaling in industrial environments
  - Consumption metering of distributed load feeders
- Interfacing to KNX / EIB, AS-Interface, PROFINET, PROFIBUS, and Modbus systems
- Easy contacting of the bus line with insulation displacement method
- Easy and fast planning
- Flexible for extension and modification
- Modular system
- Retrofitting to existing installations possible.

For further information:

siemens.com/busbar

Configurators

The following configurators are available via the Industry Mall:

siemens.com/industrymall

- *SIVACON 8PS system BD01, 40 ... 160 A*
- *SIVACON 8PS system BD2, 160 ... 1,250 A*

4 Devices and components

4.1	**High-voltage switching devices**	**176**
4.1.1	Circuit-breakers	176
4.1.2	Disconnectors and earthing switches	191
4.2.	**High-voltage components**	**200**
4.2.1	Surge arresters	200
4.2.2	Instrument transformers	208
4.2.3	Coil products	225
4.2.4	Bushings	230
4.2.5	Long rod insulators	236
4.3	**Medium-voltage switching devices**	**245**
4.3.1	Indoor devices	245
4.3.2	Outdoor devices	258
4.4	**Medium-voltage components**	**262**
4.4.1	Surge arresters	262
4.5	**Low-voltage components**	**264**
4.5.1	Requirements on low-voltage components in the three circuit types	264
4.5.2	Low-voltage protection and switching devices	266
4.5.3	Power monitoring system for the low-voltage power distribution	268
4.5.4	Software for power system dimensioning	269
4.5.5	The safe power supply with renewable energy sources	271

4.1 High-voltage switching devices

4.1.1 Circuit-breakers

Circuit-breakers for 72.5 kV up to 800 kV

Circuit-breakers are the central part of AIS and GIS switchgear. They have to fulfill demanding requirements such as:

- Reliable opening and closing
- Consistently high quenching performance with rated and short-circuit currents even after many switching operations
- High-performance, reliable, maintenance-free operating mechanisms.

State-of-the-art technology combined with years of operating experience is put to use in the further development and optimization of Siemens circuit-breakers. This ensures Siemens circuit-breakers meet the demands placed on high-voltage switchgear.

The comprehensive quality system is certified in accordance with DIN EN ISO 9001. It covers development, manufacturing, sales, commissioning, and after-sales service. Test laboratories are accredited by EN 45001 and PEHLA/STL.

The modular design

Circuit-breakers for air-insulated switchgear are individual components and are assembled on site with the individual electrical and mechanical components of an AIS installation.

Thanks to the consistent application of a modular design, all Siemens circuit-breaker types, whether air-insulated or gas-insulated, are made up of the same range of components based on a well-proven platform design (fig. 4.1-1):

- Interrupter unit
- Operating mechanism
- Sealing system
- Operating rod
- Control elements.

Interrupter unit – self-compression arc-quenching principle

The Siemens product range from 72.5 kV up to 800 kV includes high-voltage circuit-breakers with self-compression interrupter units – for optimum switching performance under every operating condition and for every voltage level.

Self-compression circuit-breakers

3AP high-voltage circuit-breakers for the complete voltage range ensure optimum use of the thermal energy of the arc in the contact cylinder. This is achieved by the self-compression interrupter unit.

Siemens patented this method for arc quenching in 1973. Since then, Siemens has continued to develop the self-compression interrupter unit technology.

One of its technical innovations is the increasing use of arc energy to extinguish the arc. In short-circuit breaking operations, the actuating energy required is reduced to the energy needed for mechanical contact movement.

This means that the operating energy is significantly minimized. The self-compression interrupter unit allows the use of a compact stored-energy spring mechanism that provides unrestricted high dependability.

Stored-energy spring mechanism – for the complete product range

The operating mechanism is a central part of the high-voltage circuit-breakers. The drive concept of the 3AP high-voltage circuit-breakers is based on the stored-energy spring principle. The use of such an operating mechanism for voltage ranges of up to 800 kV was needed as a result of the development of a self-compression interrupter unit requiring minimal actuating energy.

Advantages of the stored-energy spring mechanism are:

- Highest degree of operational safety: It is a simple and sturdy design and uses the same principle for rated voltages from 72.5 kV up to 800 kV with just a few moving parts. Due to the self-compression design of the interrupter unit, only low actuating forces are required.
- Availability and long service life: Minimal stressing of the latch mechanisms and rolling-contact bearings in the operating mechanism ensure reliable and wear-free transmission of forces.
- Maintenance-free design: The spring charging gear is fitted with wear-free spur gears, enabling load-free decoupling.

Siemens circuit-breakers for rated voltage levels from 72.5 kV up to 800 kV are equipped with self-compression interrupter units and stored-energy spring mechanisms.

For special technical requirements such as rated short-circuit breaking currents of 80 kA, Siemens can offer twin-nozzle circuit-breaker series 3AQ or 3AT with an electrohydraulic mechanism.

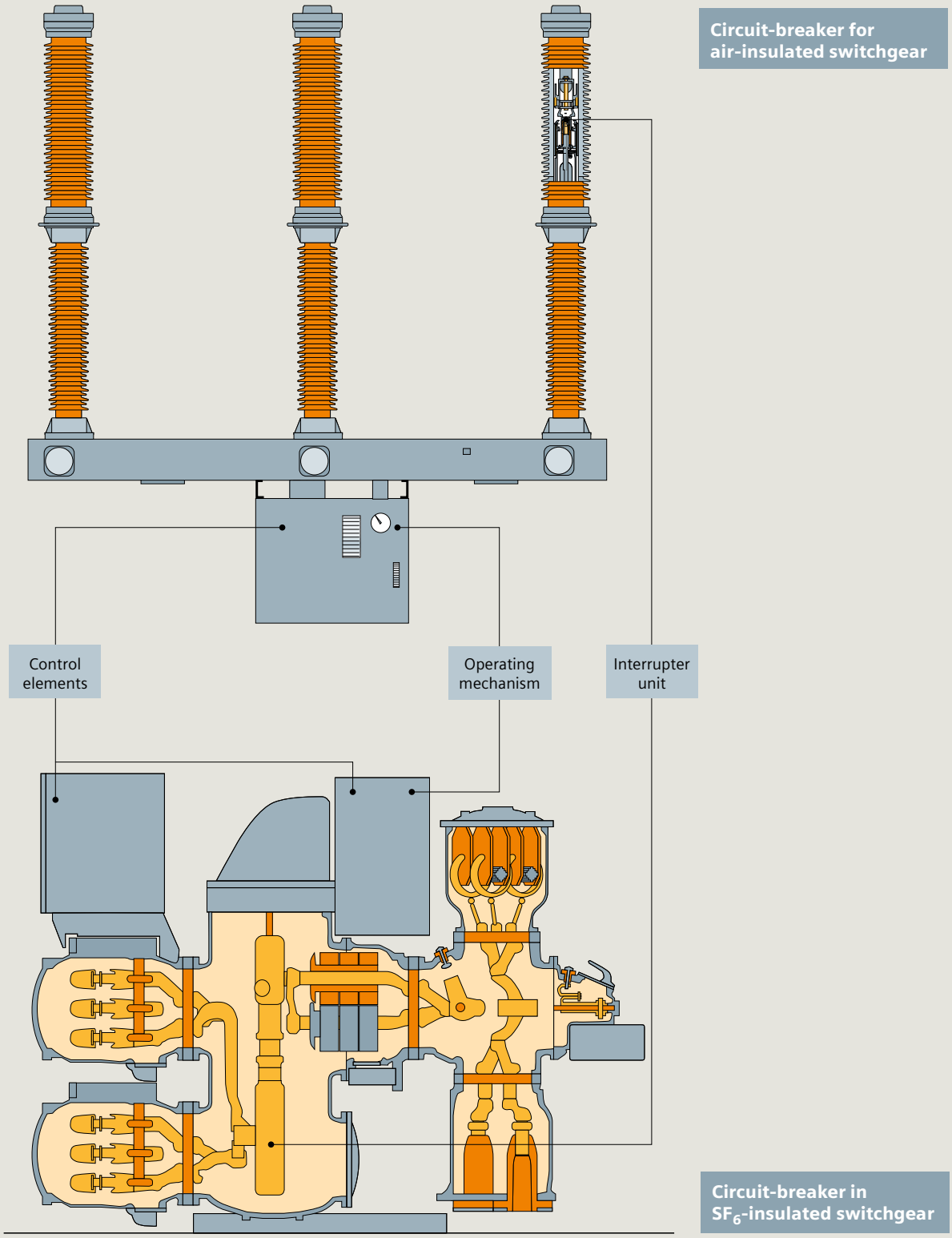

Fig. 4.1-1: Circuit-breaker parts: circuit-breaker for air-insulated switchgear (top), circuit-breaker in SF_6-insulated switchgear (bottom)

1
2
3
4
5
6
7
8
9
10
11
12
?

The interrupter unit: self-compression system

The conducting path
The current conducting path of the interrupter unit consists of the contact support (2), the base (7), and the movable contact cylinder (6). In the closed position, the current flows via the main contact (4) and the contact cylinder (6) (fig. 4.1-2).

Breaking operating currents
During the opening operation, the main contact (4) opens first and the current commutates to the closed arcing contact. During the further course of opening, the arcing contact (5) opens and an arc is drawn between the contacts. At the same time, the contact cylinder (6) moves into the base (7) and compresses the SF_6 gas located there. This gas compression creates a gas flow through the contact cylinder (6) and the nozzle (3) to the arcing contact, extinguishing the arc.

Breaking fault currents
In the event of interrupting high short-circuit breaking currents, the SF_6 gas is heated up considerably at the arcing contact due to the energy of the arc. This leads to a pressure increase in the contact cylinder. During the further course of opening, this increased pressure initiates a gas flow through the nozzle (3), thus extinguishing the arc. In this case, the arc energy is used to interrupt the fault current. This energy does not need to be provided by the operating mechanism.

Major features:
- Self-compression interrupter unit
- Use of the thermal energy of the arc
- Minimized energy consumption
- High reliability over the long term.

The operating mechanism

Stored-energy spring mechanism
Siemens circuit-breakers for voltages up to 800 kV are equipped with stored-energy spring mechanisms. These operating mechanisms are based on the same principle that has continued to prove its worth in Siemens low-voltage and medium-voltage circuit-breakers for decades. The design is simple and robust, with few moving parts and a highly-reliable vibration-isolated latch system. All components of the operating mechanism, the control and monitoring equipment, and all terminal blocks are arranged in a compact and convenient way in one cabinet.

Depending on the design of the operating mechanism, the energy required for switching is provided by individual compression springs (one per pole), or by springs that function jointly on a three-pole basis.

The principle of the operating mechanism with charging gear and latching is identical on all types (fig. 4.1-3). Differences between mechanism types are in the number, size and arrangement of the opening and closing springs.

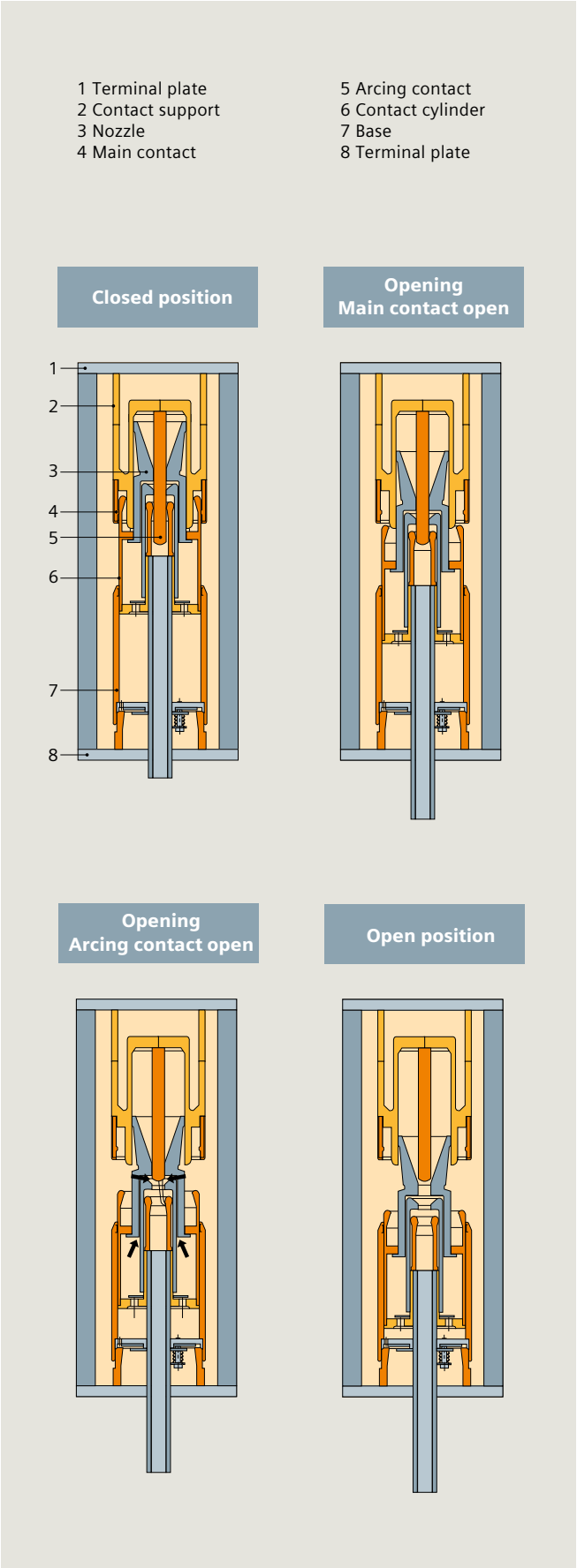

Fig. 4.1-2: The interrupter unit

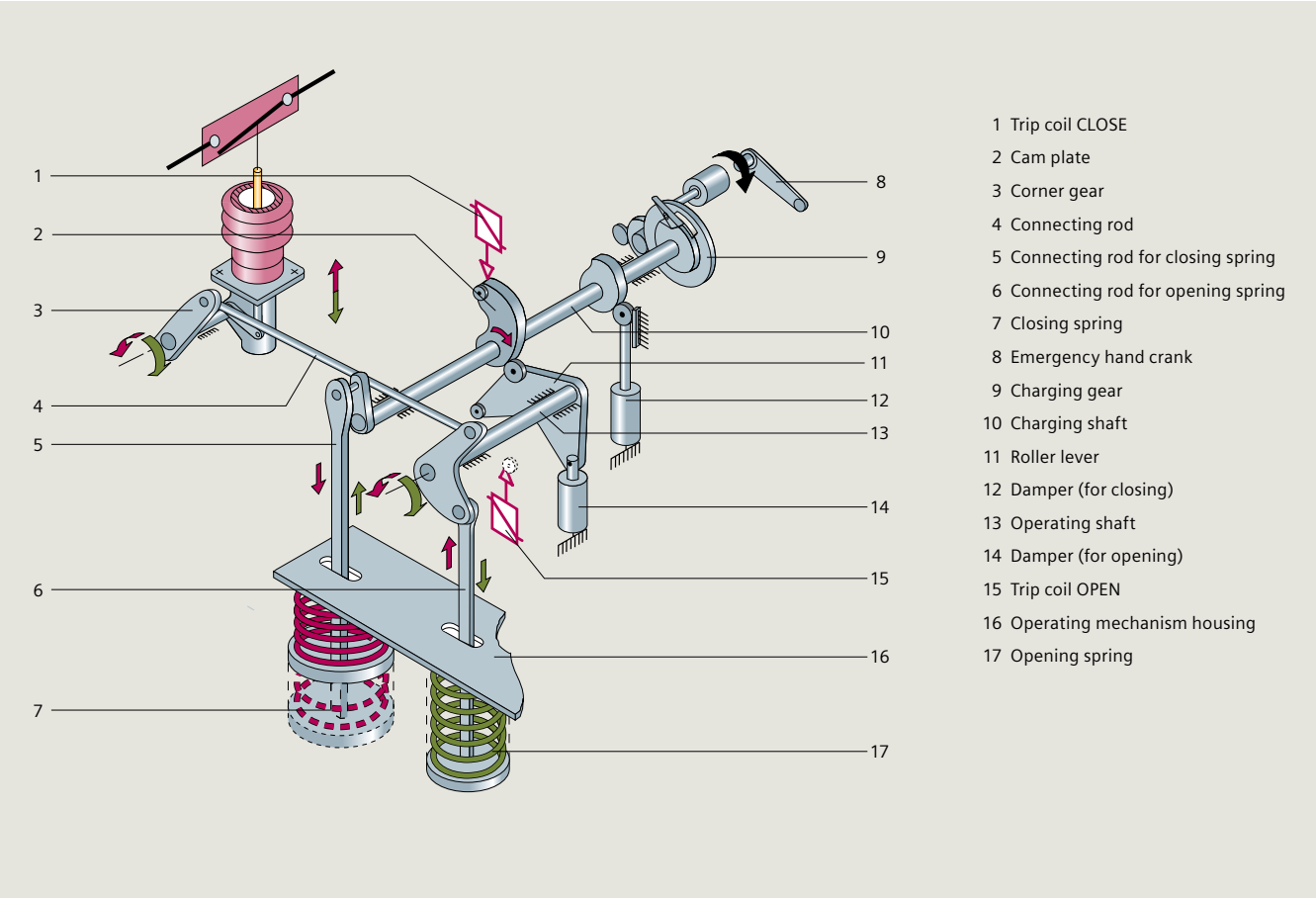

Fig. 4.1-3: Operating mechanism

Main features at a glance:
- Uncomplicated, robust construction with few moving parts
- Maintenance-free
- Vibration-isolated latches
- Load-free uncoupling of charging mechanism
- Easy access
- 10,000 operating cycles.

The control unit includes all necessary devices for circuit-breaker control and monitoring such as (fig. 4.1-4):

- Pressure / SF_6 density monitors
- Relays for alarms and lockout
- Operation counters (upon request)
- Local circuit-breaker control (upon request)
- Anti-condensation heaters.

Fig. 4.1-4: Control cubicle

Live-tank circuit-breakers for 72.5 kV up to 800 kV

Live-tank circuit-breakers for air-insulated switchgear
The interrupter unit in live-tank circuit-breakers is not earthed during operation; it is exposed to high-voltage potential. These circuit-breakers are therefore called live tanks.

The live-tank circuit-breaker family is available for rated voltages from 72.5 kV up to 800 kV (fig. 4.1-5).

They consist of the following main components based on a well-established platform concept (fig. 4.1-6, fig. 4.1-7, fig. 4.1-8):

- Self-compression interrupter unit
- Stored-energy spring mechanism
- Insulator column (AIS)
- Operating rod
- Circuit-breaker base
- Control unit.

3AP1 circuit-breakers up to 300 kV are equipped with one interrupter unit per pole, and 3AP2 circuit-breakers up to 550 kV include two interrupter units. For applications from 362 kV to 550 kV, the circuit-breakers can be equipped with optional closing resistors (3AP3). The 3AP4 includes four interrupter units per pole and can also be delivered with closing resistors on request (3AP5). Moreover, the Siemens high-voltage live-tank circuit-breakers are available for three-pole operation with a common base (FG) (fig. 4.1-9), for single-pole operation with a common base (FE), or for single-pole operation with separate bases (FI).

Siemens high-voltage circuit-breakers operate safely, and are capable of withstanding high mechanical loads. Particularly strong porcelain insulators and a circuit-breaker design optimized by using the latest mathematical techniques give them very high seismic stability while in operation, enabling them to perform to their full potential during the entire service life of up to 50 years (table 4.1-1). The uncomplicated design of the circuit-breakers and the use of many similar components ensure high reliability. The experience Siemens has gained from the many circuit-breakers in service has been applied to improving the design. The self-compression interrupter unit, for example, has proven its reliability in more than 100,000 installations all over the world.

Fig. 4.1-5: 3AP4 FI 800 kV pole

1
2
3
4
5
6
7
8
9
10
11
12
?

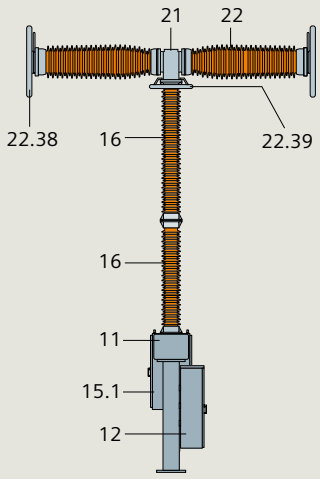

11	Base
12	Control cubicle
15.1	Operating mechanism housing
16	Post insulator
21	Bell-crank mechanism
22	Interrupter unit
22.38	Corona ring of the double-break assembly
22.39	Corona ring of the pole column

Fig. 4.1-6: 3AP2 FI 550 kV pole

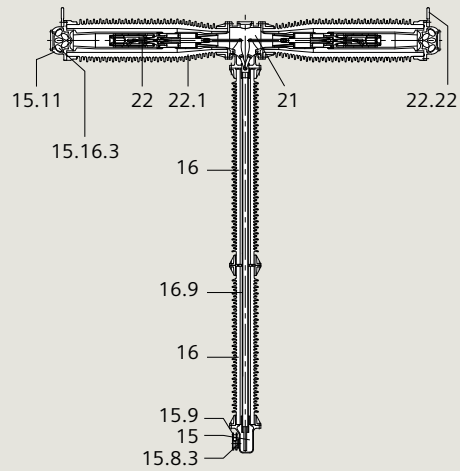

15	Corner gear
15.11	Filter cowl
15.16.3	Filter bag
15.8.3	Shaft
15.9	Lever
16	Post insulator
16.9	Operating rod
21	Bell-crank mechanism
22	Interrupter unit
22.1	Jacket
22.22	High-voltage terminal

Fig. 4.1-7: Sectional view of pole column

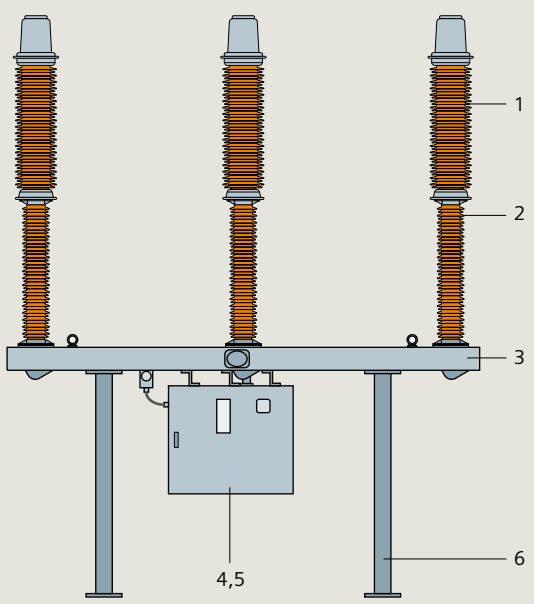

1	Interrupter unit	4	Control cubicle
2	Post insulator	5	Operating mechanism housing
3	Circuit-breaker base	6	Pillar

Fig. 4.1-8: 3AP1 FG 145 kV with three-pole stored-energy spring mechanism

Fig. 4.1-9: 3AP1 FG 145 kV

Efficiency
- Maintenance-free for 25 years
- Service-free even with frequent breaking operations

Performance
- Two-cycle current interruption
- High number of short-circuit interruptions

Sustainability
- Vacuum interruption
- Nitrogen insulation
- Beneficial CO_2 footprint

Reliability
- 40 years of experience in vacuum switching technology
- Perfect for low temperature applications

Fig. 4.1-10: 3AV1 FG vacuum circuit-breaker 72.5 kV

Live-tank circuit-breakers with vacuum technology
Following 40 years of experience producing medium-voltage vacuum interrupters and more than three million delivered units, Siemens has now introduced this proven technology into high-voltage power networks.

The new member of the Siemens circuit-breaker family meets the same high quality standards as the SF_6 portfolio for high performance and reliability throughout its long service life, and is also designed according to the well-established modular platform concept.

The new 3AV1 vacuum circuit-breaker has clear technical advantages: It features reliable switching capacity, requires no maintenance even when subjected to frequent breaking operations, and is also environmentally friendly – thanks to switching operations performed in a vacuum, with nitrogen as the insulating medium.

These circuit-breakers are the right choice for future projects across a wide range of applications.

A complete set of type tests in accordance with the latest edition of IEC 62271-100 has proven the suitability of the 72.5 kV live-tank vacuum circuit-breaker.

Field experience
Prototypes of the new Siemens high-voltage vacuum circuit-breakers have already been installed in European power networks. A number of energy customers are operating the 3AV1 prototypes in their systems, and are sharing their operating and field experience with us. In fact, several thousand switching operations have already been performed successfully in the field and documented (fig. 4.1-10).

Type		3AP1						3AP2/3		3AP4/5
Rated voltage	[kV]	72.5	123	145	170	245	300	420	550	800
Number of interrupter units per pole		1						2		4
Rated short-duration power-frequency withstand voltage	[kV]	140	230	275	325	460	460	610	800	830
Rated lightning impulse withstand voltage/min	[kV]	325	550	650	750	1,050	1,050	1,425	1,550	2,100
Rated switching impulse withstand voltage	[kV]	–	–	–	–	–	850	1,050	1,175	1,425
Rated normal current, up to	[A]	2,500	4,000	4,000	4,000	4,000	4,000	5,000	5,000	5,000
Rated short-time withstand current (1 s – 3 s), up to	[$kA_{(ms)}$]	31.5	40	40	40	50	40	63	63	63
Rated short-circuit breaking current, up to	[kA]	31.5	40	40	40	50	40	80	63	63
Temperature range	[°C]	– 60 up to + 55*								
Rated operating sequence		0-0.3 s-CO-3 min-CO or CO-15 s-CO								
Rated break time		3 cycles						2 cycles		
Rated frequency	[Hz]	50/60								
Maintenance after		25 years								
Type		**3AV1**								
Rated voltage	[kV]	72.5								
Number of interrupter units per pole		1								
Rated normal current, up to	[A]	2,500								
Rated short-time withstand current, up to	[kA]	31.5								
Rated short-circuit breaking current, up to	[kA]	31.5								
Rated frequency	[Hz]	50								
Rated power-frequency withstand voltage	[kV]	140								
Rated lightning impulse withstand voltage	[kV]	325								
Rated duration of short circuit	[s]	3								
Rated peak withstand current (2.7 p.u.)	[kA]	85								
First-pole-to-clear-factor	[p.u.]	1.5/1.3								
Capacitive voltage factor	[p.u.]	1.4								
Temperature range	[°C]	– 55 up to + 40								
Maintenance after		25 years								
Insulating medium		N_2								
All values in accordance with IEC; other values on request										

Table 4.1-1: Technical data of live-tank circuit-breaker portfolio

** Limited normal current ratings at more than +40°C*

Dead-tank circuit-breakers for 72.5 kV up to 550 kV

Circuit-breakers in dead-tank design

In contrast to live-tank circuit-breakers, dead tanks have a metal-enclosed interrupter unit and the housing is always earthed. They are therefore called dead-tank circuit-breakers. For certain substation designs, dead-tank circuit-breakers might be required instead of the standard live-tank circuit-breakers. The dead-tank circuit-breaker offers particular advantages if the protection design requires the use of several current transformers per pole assembly. For this purpose, Siemens can offer dead-tank circuit-breaker types suitable for different voltage levels (fig. 4.1-11, fig. 4.1-12, fig. 4.1-13).

Most important characteristics of a dead-tank circuit-breaker:

- A compact construction due to toroidal-core current transformers on bushings
- High short-circuit breaking currents (up to 63 kA with one interrupter unit)
- Low impulse load of the bases
- Higher seismic withstand capability due to low center of gravity of the bases
- Gas mixture or heating system for lowest temperature applications
- Gas-insulated components ensure highest availability with minimum maintenance effort
- Metal-enclosed interrupter unit (earthed housing).

Current transformers (CT)

The dead-tank circuit-breakers can be equipped with bushing current transformers for measurement or protection purposes, fulfilling the requirements of international standards such as IEC, ANSI, etc. The current transformers are mounted in weatherproof housings onto both sides of each circuit-breaker pole, and are located at the base of the bushings. The current transformer leads terminate in the control cubicle at short-circuiting-type terminal blocks. A standard housing provides space for up to three current transformers per bushing.

The 3AP DT high-voltage circuit-breaker operates safely and is capable of bearing high loads. Extra-strong porcelain bushings and an optimized circuit-breaker design give it very high seismic stability while in operation. The circuit-breaker covers the whole temperature range from -60 °C up to 55 °C with pure SF_6, which makes it suitable for all climate zones.

Like the other circuit-breakers, the Siemens dead tanks are based on a proven modular design using a patented self-compression arc-quenching system and the stored-energy spring drive mechanism. They ensure a consistent quenching performance with rated and short-circuit currents – even after many switching operations.

Fig. 4.1-11: SPS2 / 3AP1 DT 72.5 kV

Fig. 4.1-12: SPS2 / 3AP1 DT 145 kV

Fig. 4.1-13: SPS2 / 3AP1 DT 362 kV (two cycles)

Dead-tank circuit-breaker

Type SPS2 and 3AP DT
The type SPS2 power circuit-breakers are used for the US and ANSI markets, and the 3AP DT circuit-breaker types are offered in IEC markets. Both types are designed as general, definite-purpose circuit-breakers for use at maximum rated voltages from 72.5 kV up to 550 kV (table 4.1-2). In 2012, two new DT breakers with two-cycles interruption for 245 kV and 362 kV complemented the Siemens DT portfolio, and have been established on the market with great success (fig. 4.1-13).

The design
Dead-tank circuit-breakers (except for the 550 kV version) consist of three identical pole units mounted onto a common support frame. The opening and closing spring of the FA-type operating mechanism is transferred to the moving contacts of the interrupter unit through a system of connecting rods and a rotating seal at the side of each phase.

The connection to the overhead lines and busbars is established by SF_6-insulated air bushings. The insulators are available in either porcelain or composite (epoxy-impregnated fiberglass tube with silicone rubber sheds) materials.

The tanks and the bushings are charged with SF_6 at a rated pressure of 6.0 bar. The SF_6 is used for insulation and arc-quenching purposes.

The 3AP2/3 DT for 550 kV (fig. 4.1-14, fig. 4.1-15) consists of two interrupter units in a series that features a simple design. The proven Siemens arc-quenching system ensures faultless operation, a consistently high arc-quenching capacity, and a long service life, even at high switching frequencies.

Thanks to ongoing further development, optimization, and consistent quality assurance, Siemens self-compression arc-quenching systems meet all the demands placed on modern high-voltage technology.

A control cubicle mounted at one end of the circuit-breaker houses the spring operating mechanism and circuit-breaker control components. The interrupter units are located in the aluminum housing of each pole unit. The interrupters use the latest Siemens self-compression arc-quenching system.

The stored-energy spring mechanism is the same design as used for the Siemens 3AP live-tank circuit-breakers, GIS, and compact switchgear. This design has been in service for more than ten years, and has a well-documented reliability record.

Operators can specify up to four (in some cases, up to six) bushing-type current transformers (CT) per phase. These CTs, mounted externally on the aluminum housings, can be removed without dismantling the bushings.

Technical data	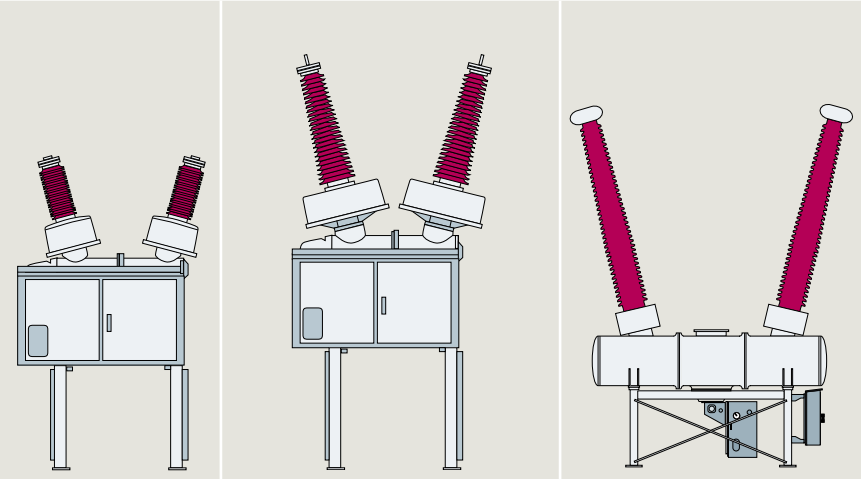						
Type	**3AP1 DT / SPS2**					**3AP2/3 DT / SPS2**	
Rated voltage [kV]	72.5	123	145	245	362	362	550
Rated power-frequency withstand voltage [kV]	140 / 160	230 / 260	275 / 310	460	520	520	800 / 860
Rated lighting impulse withstand voltage [kV]	325 / 350	550	650	1,050	1,380	1,380	1,865 / 1,800
Rated switching impulse withstand voltage [kV]	–	–	–	–	950	950	1,175
Rated nominal current up to [A]	3,150	3,150	3,150	3,150	5,000	4,000	4,000 / 5,000
Rated breaking current up to [kA]	40	40	63	90	63	80	63
Operating mechanism type	Stored-energy spring mechanism						

Table 4.1-2: Technical data of dead-tank circuit-breaker

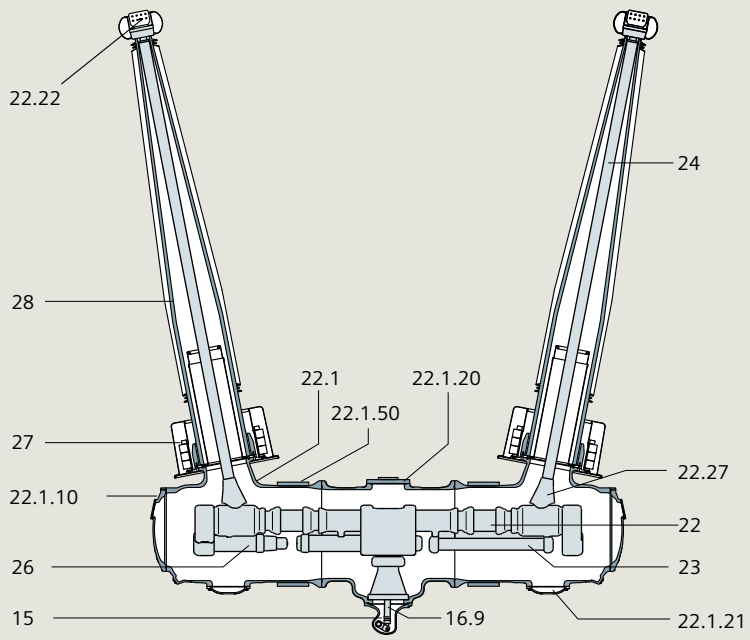

15	Corner gear
16.9	Operating rod
22	Interrupter unit
22.1	Housing
22.1.10	Cover
22.1.10.1	Cover
22.1.20	Cover with bursting disc
22.1.21	Cover with filter material
22.1.50	Additional heating
22.22	High-voltage terminal
22.27	Conductor connection
23	Grading capacitor
24	Bushing conductor
26	Closing resistor
27	Current transformer
28	Bushing

Fig. 4.1-14: Sectional view of a 3AP2/3-DT circuit-breaker pole

Operating mechanism
The mechanically and electrically trip-free spring mechanism type FA is used on type SPS2 and 3AP1/2 DT circuit-breakers. The closing and opening springs are loaded for "O-C-O" operations.

A weatherproof control cubicle (degree of protection IP55) has a large door sealed with rubber gaskets for easy access during inspection and maintenance. Condensation is prevented by heaters that maintain a difference between inside/outside temperature, and by ventilation.

The control system includes all the secondary technical components required for operating the circuit-breaker, which are typically installed in the control cubicle. The current transformer connections are also located in the control cubicle.

There is a wide selection of control, tripping, motor and heating power supplies. Depending on customer requirements, two standard control versions are available.

Fig. 4.1-15: 3AP2 DT 550 kV

Basic version
The basic variant includes all control and monitoring elements that are needed for operation of the circuit-breaker. In addition to the elementary actuation functions, it features:
- 19 auxiliary switch contacts (nine normally open, nine normally closed, one passing contact)
- Operations counter
- Local actuator.

Compact version
In addition to the basic version, this type includes:
- Spring monitoring by motor runtime monitoring
- Heating monitoring (current measuring relay)
- Luminaire and socket attachment with a common circuit-breaker to facilitate servicing and maintenance work
- Overvoltage attenuation
- Circuit-breaker motor
- Circuit-breaker heating.

1
2
3
4
5
6
7
8
9
10
11
12
?

The 3AP1 DTC – Dead-Tank Compact – a compact switchgear up to 245 kV

The hybrid concept

The hybrid concept combines SF_6-encapsulated components and air-insulated devices. The application of gas-insulated components increases availability of switchgear. According to CIGRE analyses, gas-insulated components are four times more reliable than air-insulated components. The level of encapsulation can be defined in accordance with the requirements of the individual substation layout and the system operator's project budget. This leads to optimized investments and can be combined with further air-insulated devices.

The modular design

Based on the well-proven modular design, the core components of the main units apply the same technology that is used in the well-established high-voltage circuit-breakers, disconnectors, and GIS product family from Siemens.

These components are (fig. 4.1-16):

- Self-compression arc-quenching interrupter unit of the AIS 3AP circuit-breaker
- Stored-energy spring mechanism
- SF_6-insulated disconnector / earthing switch from the GIS type 8DN8
- Outdoor earthing switch from the disconnector product range.

This enables flexible solutions according to different substation configurations (fig. 4.1-17, fig. 4.1-18, fig. 4.1-20):

- Circuit-breaker with single-pole or three-pole operating mechanism
- Disconnector, earthing switch, high-speed earthing switch
- Current transformer, voltage transformer, and voltage detecting system
- Cable connections possible at various positions
- Bushings available as porcelain or composite insulators
- Additional separations of gas compartment, with SF_6 density monitor on request
- Double-breaker modules for ultra-compact substation designs
- Option to combine with stand-alone components, e.g., disconnector module with voltage transformer.

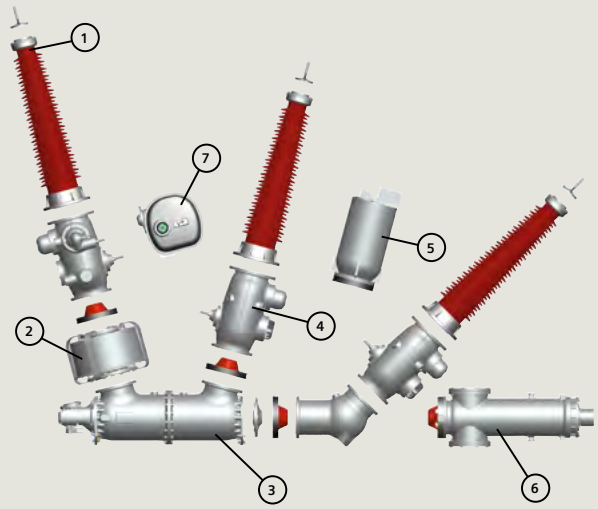

1. Bushing
2. Current transformer
3. Circuit-breaker with self-compression principle
4. Three-position disconnector and earthing switch
5. Voltage transformer
6. Cable connection assembly
7. High-speed earthing switch

Fig. 4.1-16: Possible components for the 3AP1 DTC

Fig. 4.1-17: 3AP1 DTC 145 kV

Fig. 4.1-18: 3AP1 DTC 245 kV

Highlights and characteristics

- Simple SF_6 filling and monitoring, one gas compartment possible (separation optional)
- Flexibility in confined spaces and extreme environmental conditions, e.g., low temperature applications to –55 °C
- Single-pole encapsulation: no three-phase fault possible, and fast replacement of one pole (spare part: one pole)
- Safety can be enhanced by separated gas compartments, e.g., between circuit-breaker and disconnector
- Complete module can be moved with a fork-lift truck
- Fast installation and commissioning: easy assembly of fully manufactured and tested modular units
- Less maintenance effort: first major inspection after 25 years
- Service life minimum 50 years
- Single-pole and three-pole operated drive system for 145 kV and 245 kV (fig. 4.1-19).

Standard

The international IEC 62271-205 standard treats compact switchgear assemblies for rated voltages above 52 kV. The used terminology for the hybrid concept is the so-called mixed technology switchgear (MTS).

The Siemens compact switchgear is fully type-tested in accordance with this standard (table 4.1-3).

Siemens has one of the most modern testing laboratories available, which is certified and part of the European network of independent testing organizations (PEHLA). Additional international testing laboratories (KEMA, CESI) also certify the high quality standards of the Siemens circuit-breakers.

Accessories for 3AP1 DTC

To enhance the possibility of circuit-breaker monitoring, the Siemens voltage detecting system (VDS) or SIVIS camera systems can be used.

The VDS is an economic alternative to a voltage transformer if the measurement of voltage values is not required. Up to three VDS systems can be integrated into the outgoing units to monitor the voltage. The system is attached directly to the disconnector and earthing switch component of the DTC, and enables the voltage condition of the compact switchgear to be checked.

SIVIS camera systems for the 3AP1 DTC make it possible to quickly and easily check the disconnecting earthing switch module positions. The systems are a complementary solution for preexisting position indicators on earthing switch operating mechanisms. With these camera systems, Siemens has made it easy for maintenance and service personnel to monitor the disconnector, earthing switch, and high-speed rating positions during maintenance, which further improves the safety standards of the switchgear. Depending on individual requirements, the customer can choose between a stationary and a mobile camera system.

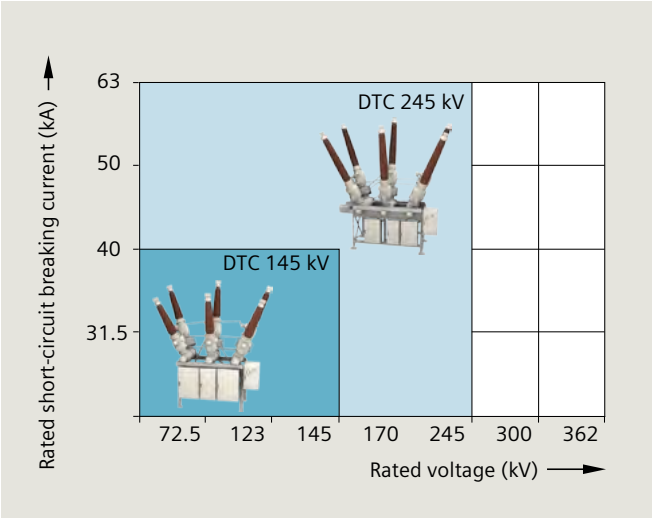

Fig. 4.1-19: DTC product range, one-pole or three-pole operation

Fig. 4.1-20: 3AP1 DTC 145 kV with voltage transformer and cable connection

High-voltage compact switchgear		3AP1 DTC	
Rated voltage	[kV]	145	245
Rated normal current	[A]	3,150	4,000
Rated frequency	[Hz]	50/60	50/60
Rated lightning impulse withstand voltage	[kV]	650	1050
Rated power-frequency withstand voltage	[kV]	275	460
Rated short-time withstand current (3 s)	[kA]	40	63
Rated peak withstand current	[kA]	108	170

Table 4.1-3: Technical data of 3AP1 DTC

The DCB – Disconnecting Circuit-Breaker

ONE device – TWO functions
In switchgear, isolating distances in air combined with circuit-breakers are used to protect the circuit state in the grid.

Siemens developed a combined device in which the isolating distance was integrated into the SF_6 gas compartment on the basis of an SF_6-insulated circuit-breaker to reduce environmental effects. The combined device (DCB – disconnecting circuit-breaker) is used as a circuit-breaker and additionally as a disconnector – two functions combined in one device (fig. 4.1-21, fig. 4.1-23).

The DCB was developed on the basis of a higher-rated standard 3AP circuit-breaker to provide the higher dielectric properties required, and was type-tested in accordance with IEC 62271-108 for disconnecting circuit-breakers. Due to the SF_6-insulated disconnector function, there is no visible opening distance anymore. The proper function of the kinematic chain has been thoroughly verified. The closest attention was paid to developing a mechanical interlock, which guarantees that the circuit-breaker remains in open position when used as a disconnector. When this mechanical interlock is activated, it is impossible to close the breaker (fig. 4.1-22). The current status of the DCB can also be controlled electrically, and is shown by highly-visible position indicators.

In addition, an air-insulated earthing switch can be mounted onto the supporting structure. Its earthing function is implemented by a well-established earthing switch with a Ruhrtal-designed maintenance-free contact system.

The disconnecting circuit-breakers are type-tested in accordance with class M2 and C2 of IEC 62271-108, a specific standard for combined switching devices (table 4.1-4).

Fig. 4.1-21: 3AP1 DCB 145 kV

Fig. 4.1-22: 3AP2 DCB interlock indicator

1
2
3
4
5
6
7
8
9
10
11
12

Combining the strengths of a well-proven product portfolio, Siemens can provide a new type of device that fulfills the system operator's needs for highest reliability and safety, while saving space and costs at the same time.

Highlights and characteristics

- Maximum reliability by applying well-proven and established components from Siemens circuit-breakers and Ruhrtal-designed earthing switches
- Maximum availability due to longer maintenance intervals
- Economical, space-saving solution by combining the circuit-breaker and the disconnector into one device
- Minimized costs for transportation, maintenance, installation and commissioning, as well as civil works (foundation, steel, cable ducts, etc.)
- Compact and intelligent interlocking and position indicating device
- Also available without earthing switch
- Porcelain or composite insulators available.

		3AP1 DCB	3AP2 DCB
Rated voltage	[kV]	145	420
Number of interrupter units per pole		1	2
Rated power-frequency withstand voltage	[kV]	275/315	520/610
Rated lightning impulse withstand voltage	[kV]	650/750	1,425/1,665
Rated switching impulse withstand voltage	[kV]	n.a.	1,050/1,245
Rated normal current up to	[A]	3,150	4,000
Rated short-circuit breaking current	[kArms]	31.5	40
Ambient air temperature *)	[°C]	-40 ... +40	-40 ... +40
Insulating medium		SF_6	SF_6
Classification CB		M2, C2	M2, C2
Classification DS		M2	M2
Insulators		Composite **)	Composite
Attached earthing switch (optional)		Yes	No

*) Other ambient temperature values on request
**) Or porcelain

Table 4.1-4: Technical data of 3AP DCB

Fig. 4.1-23: 3AP2 DCB 420 kV

For further information:
siemens.com/energy/hv-circuit-breaker

4.1.2 Disconnectors and earthing switches

General

Disconnectors are an essential part of electrical power substations. They indicate a visible isolating distance in an air isolated gap.

Modern production technologies and investments in the Siemens production sites worldwide ensure sustained product and process quality in accordance with Siemens' high standards.

Siemens disconnectors fulfill the system operator's requirements of low lifecycle costs with maximum availability and a cost-effective operation by:

- Delivery of entirely routine-tested and pre-adjusted assembly groups
- Easy erection and commissioning
- Maintenance-free bearings and contact systems
- Lifetime technical support
- Proven reliability of contact systems over decades of service.

The most important features are:

- Self-resilient contact fingers – no further spring elements are necessary to generate the contact force
- Silver-plated contact surface provides maximum conductivity without regular greasing lubrication
- Factory set contact forces; no readjustments required during service life
- Ice layers up to 20 mm can be broken without difficulty
- Maintenance-free contact system for up to 25 years.

The reliability of Siemens disconnectors and earthing switches over many decades has been ensured by a comprehensive testing and quality assurance system certified in accordance with DIN EN ISO 9001.

Center-break disconnectors

The center-break disconnector is the most frequently used disconnector type. The disconnector base supports the operating mechanism and two rotating porcelain support insulators. The current path arms that are fixed to the insulators open in the center. Each rotating unit comprises two high-quality ball bearings and is designed for high mechanical loads. They are lubricated and maintenance-free for the entire service life (fig. 4.1-24).

The current path of the center-break disconnector consists of only a few components, thus reducing the number of contact resistances is reduced to a minimum. The main contact system of block-contact and spread-contact fingers assures a steady contact force even after decades of operation (fig. 4.1-25).

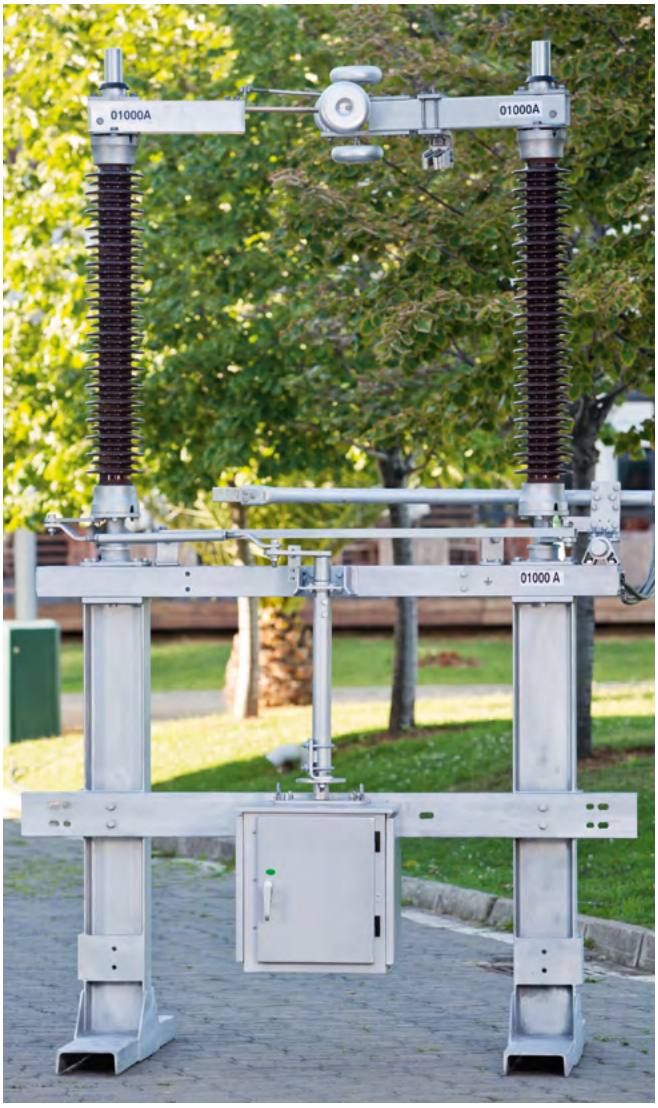

Fig. 4.1-24: Center-break disconnector

Fig. 4.1-25: Block and finger contact system

Pantograph disconnectors

This type of disconnector has a vertical isolating distance and is generally used in busbar systems to connect two busbars, a busbar to a line, or a busbar to a power transformer.

The main components of a pantograph disconnector are shown in fig. 4.1-26.

The geometry of the pantograph ensures optimum operational behavior. Rotary contact systems inside the joints that have thermal and dynamic current-carrying capacity are used for current transfer.

Ice loads of up to 20 mm can be broken without difficulty. The specific contact force is adjusted at the factory and remains unchanged during service life.

The rigidity of the scissor arms prevents opening during a short circuit. The switch position cannot be changed by external forces. In both end positions of the disconnector, the rotary arm in the bearing frame is switched beyond the dead center point.

Pantograph disconnectors with rated voltages from 123 kV up to 362 kV can be equipped with group-operating mechanisms or one-pole operating mechanisms. All pantograph disconnectors for higher rated voltages are equipped with one-pole operating mechanisms.

Vertical-break disconnectors

This type of disconnector is suitable for small phase distances. The current path of the vertical-break disconnector opens vertically and requires a minimum phase distance (fig. 4.1-27).

The current path performs two movements:
- A vertical swinging movement
- A rotary movement around its own longitudinal axis.

The rotary movement generates the contact force and breaks possible ice layers.

In both end positions, the rotary arm is switched beyond the dead center point. This locks the current path in the short-circuit-proof CLOSED position, and prevents the current path from switching to the OPEN position under external forces.

The ample distance between support insulator and rotating insulator ensures dielectric strength of the parallel insulation even in saline fog conditions.

The installation and commissioning on site is quick and easy, as the movable part of the current path is one single subassembly that is pre-adjusted and routine-tested at the factory.

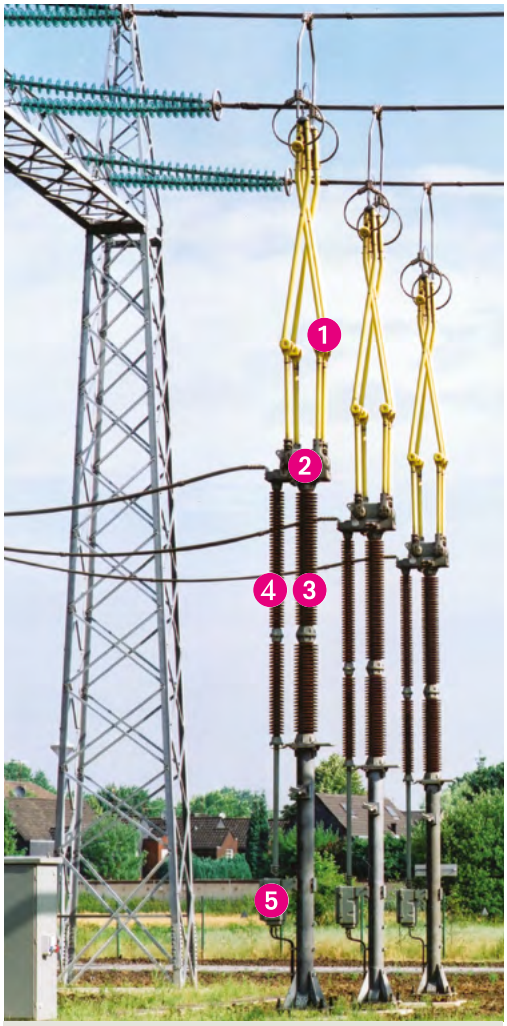

1. Scissor arms
2. Bearing frame
3. Support insulator
4. Rotating insulator
5. Motor operating mechanism

Fig. 4.1-26: Components of the pantograph disconnector

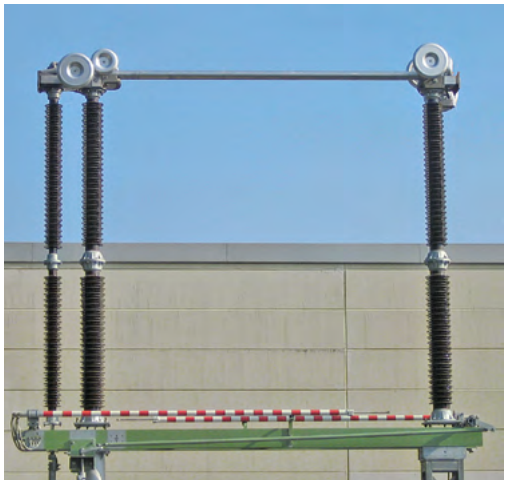

Fig. 4.1-27: Vertical-break disconnector

Double-side break disconnectors

The double-side break disconnector features three support insulators. The support insulator in the center is mounted on a rotating unit and carries the current path. Both end support insulators are fixed.

The main application of double-side break disconnectors are substations with limited phase distances and where vertical opening of the current path is not possible. High mechanical terminal loads are possible due to the compact and stable design. The disconnector can also be combined with an integrated surge arrester (fig. 4.1-28).

For voltage levels up to 245 kV, the contact fingers of the double-side break disconnectors are integrated into the current path tube, and the fixed contacts consist of contact blocks. The current path performs a horizontal swinging movement, and the contact force is generated by spreading the contact fingers while sliding on the contact blocks.

For voltage levels higher than 245 kV, contact strips are attached to the ends of the current path tubes. The contact fingers are part of the fixed contacts. In this design, the current path performs a combined swinging and rotary movement. After completion of the swinging movement, the contact force is generated by rotating the current path around its own axis.

Knee-type disconnectors

This disconnector type has the smallest horizontal and vertical space requirements. The knee-type disconnector has two fixed and one rotating insulator. Thanks to its folding-arm design, only limited overhead clearance is required, which results in lower investment costs (fig. 4.1-29).

The very compact design has advantages for indoor applications as well as mounting onto walls or ceilings. This type of disconnector is also available up to 800 kV.

Fig. 4.1-28: Double-side break disconnector with integrated surge arrester

Fig. 4.1-29: Knee-type disconnector

Earthing switches
The use of earthing switches (fig. 4.1-30) ensures absolute de-energization of high-voltage components in a circuit or switchgear.

Free-standing earthing switches are available for all voltage levels up to 800 kV.

Suitable built-on earthing switches are available for all disconnector types from the Siemens scope of supply.

According to the system operator's requirements, built-on earthing switches can be arranged laterally or in an integrated arrangement depending on the position of the main current path of the disconnector.

If required, all earthing switches can be designed for switching-induced inductive and capacitive currents in accordance with IEC 62271-102, Class A or Class B.

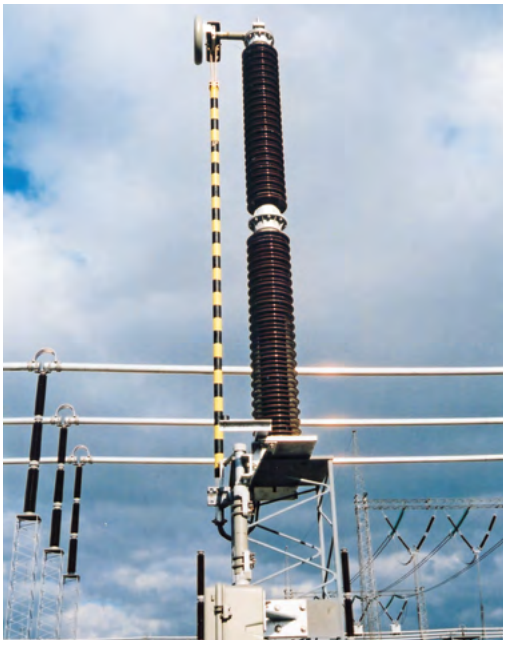

Fig. 4.1-30: Free-standing earthing switch

3DV8 and MA6/7 motor operating mechanisms
The 3DV8 type is the standard design. The MA6/7 types can be provided as an alternative option, offering the following additional advantages:

- Motor operating mechanism is mechanically decoupled in the end positions to prevent damage to the disconnector in the event of operational errors
- Aluminum casting housing is very robust.

The motor operating mechanism can also be operated manually by a hand crank, which can be inserted into the cubicle. The insertion of the hand crank automatically isolates the motor circuit for safety purposes. Heaters are provided to prevent condensation (fig. 4.1-31).

The auxiliary switch is customized to the gear unit and signals the switch position with total reliability. This ensures safe substation operation.

After the motor starts, the auxiliary switch moves and the switch position signal is cancelled. The disconnector subsequently operates until the end position is reached.

The auxiliary switch then moves again and issues the switch position signal.

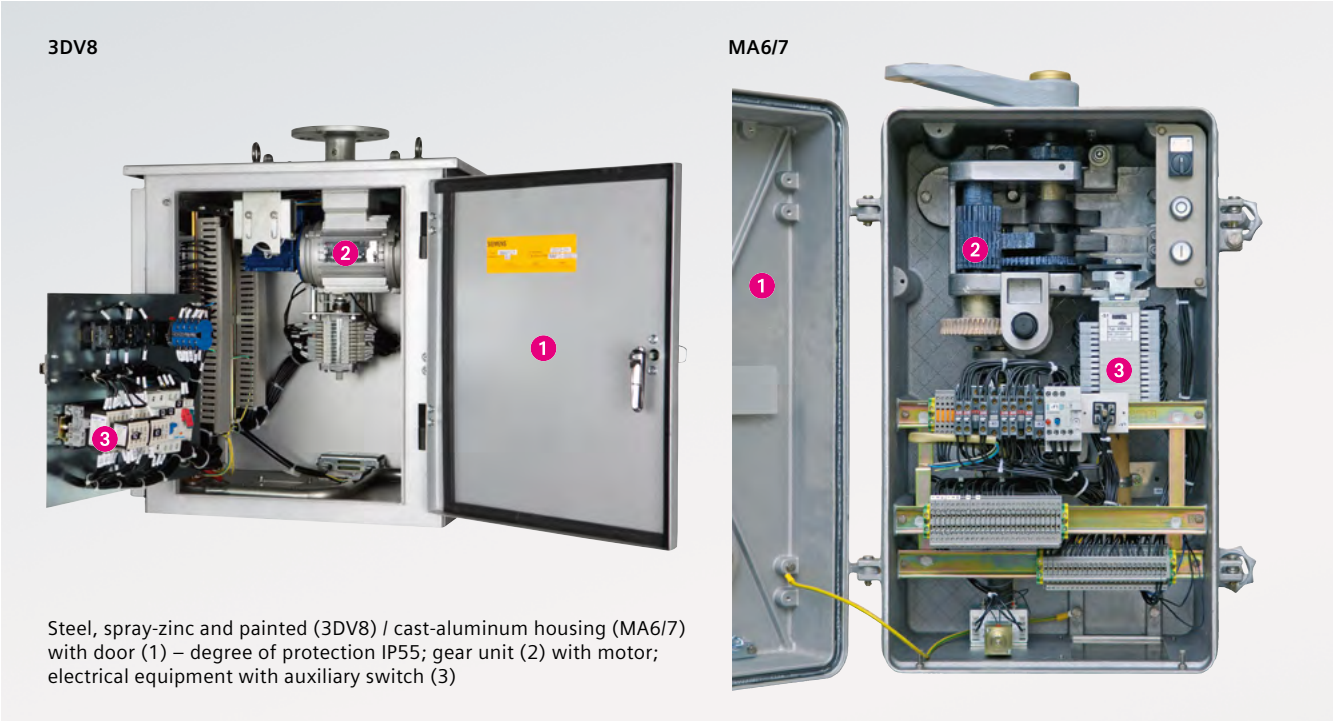

Steel, spray-zinc and painted (3DV8) / cast-aluminum housing (MA6/7) with door (1) – degree of protection IP55; gear unit (2) with motor; electrical equipment with auxiliary switch (3)

Fig. 4.1-31: Motor operating mechanism

Technical data	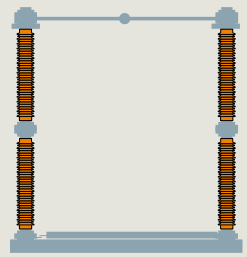								
Design	Center break								
Rated voltage	72.5	123	145	170	245	300	362	420	550
Rated power-frequency withstand voltage 50 Hz/1 min									
To earth and between phases [kV] Across the isolating distance [kV]	140 160	230 265	275 315	325 375	460 530	380 435	450 520	520 610	620 800
Rated lightning impulse withstand voltage 1.2/50 µs									
To earth and between phases [kV] Across the isolating distance [kV]	325 375	550 630	650 750	750 860	1,050 1,200	1,050 1,050 (+170)	1,175 1,175 (+205)	1,425 1,425 (+240)	1,550 1,550 (+315)
Rated switching impulse withstand voltage 250/2,500 µs									
To earth and between phases [kV] Across the isolating distance [kV]	– –	– –	– –	– –	– –	850 700 (+245)	950 800 (+295)	1,050 900 (+345)	1,175 900 (+450)
Rated normal current up to [A]	4,000								
Rated peak withstand current up to [kA]	160								
Rated short-time withstand current up to [kA]	63								
Rated duration of short circuit [s]	1/3								
Icing class	10/20								
Temperature range [°C]	–60/+55								
Operating mechanism type	Motor operation/Manual operation								
Control voltage [V, DC] [V, AC]	60/110/125/220 220...230, 1~, 50/60 Hz								
Motor voltage [V, DC] [V, AC]	60/110/125/220 110/125/220, 1~, 50/60 Hz 220/380/415, 3~, 50/60 Hz								
Maintenance	25 years								
All values in accordance with IEC; other values on request									

Table 4.1-5: Center-break disconnector

This sequence ensures that the CLOSED position is indicated only after the disconnector is locked and short-circuit-proof, and the rated current can be carried. The OPEN position is indicated only after the opened current path has reached the nominal dielectric strength.

An overview of Siemens disconnectors is shown in table 4.1-5 to table 4.1-9.

1
2
3
4
5
6
7
8
9
10
11
12
?

Technical data	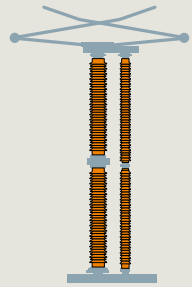							
Design	Pantograph							
Rated voltage	123	145	170	245	300	362	420	550
Rated power-frequency withstand voltage 50 Hz/1 min								
To earth and between phases [kV] Across the isolating distance [kV]	230 265	275 315	325 375	460 530	380 435	450 520	520 610	620 800
Rated lightning impulse withstand voltage 1.2/50 µs								
To earth and between phases [kV] Across the isolating distance [kV]	550 630	650 750	750 860	1,050 1,200	1,050 1,050 (+170)	1,175 1,175 (+205)	1,425 1,425 (+240)	1,550 1,550 (+315)
Rated switching impulse withstand voltage 250/2,500 µs								
To earth and between phases [kV] Across the isolating distance [kV]	– –	– –	– –	– –	850 700 (+245)	950 800 (+295)	1,050 900 (+345)	1,175 900 (+450)
Rated normal current up to [A]	5,000							
Rated peak withstand current up to [kA]	200							
Rated short-time withstand current up to [kA]	80							
Rated duration of short circuit [s]	1/3							
Icing class	10/20							
Temperature range [°C]	–60/+50							
Operating mechanism type	Motor operation/Manual operation							
Control voltage [V, DC] [V, AC]	60/110/125/220							
	220...230, 1~, 50/60 Hz							
Motor voltage [V, DC] [V, AC]	60/110/125/220 110/125/220, 1~, 50/60 Hz 220/380/415, 3~, 50/60 Hz							
Maintenance	25 years							
All values in accordance with IEC; other values on request								

Table 4.1-6: Pantograph disconnector

1
2
3
4
5
6
7
8
9
10
11
12
?

Technical data	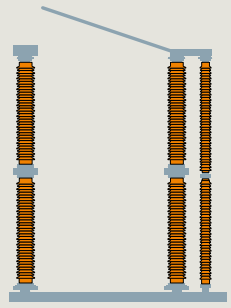							
Design	Vertical break							
Rated voltage	123	145	170	245	300	362	420	550
Rated power-frequency withstand voltage 50 Hz/1 min								
To earth and between phases [kV] Across the isolating distance [kV]	230 265	275 315	325 375	460 530	380 435	450 520	520 610	620 800
Rated lightning impulse withstand voltage 1.2/50 µs								
To earth and between phases [kV] Across the isolating distance [kV]	550 630	650 750	750 860	1,050 1,200	1,050 1,050 (+170)	1,175 1,175 (+205)	1,425 1,425 (+240)	1,550 1,550 (+315)
Rated switching impulse withstand voltage 250/2,500 µs								
To earth and between phases [kV] Across the isolating distance [kV]	– –	– –	– –	– –	850 700 (+245)	950 800 (+295)	1,050 900 (+345)	1175 900 (+450)
Rated normal current up to [A]	5,000							
Rated peak withstand current up to [kA]	160							
Rated short-time withstand current up to [kA]	63							
Rated duration of short circuit [s]	1/3							
Icing class	10/20							
Temperature range [°C]	–60/+50							
Operating mechanism type	Motor operation/Manual operation							
Control voltage [V, DC] [V, AC]	60/110/125/220 220...230, 1~, 50/60 Hz							
Motor voltage [V, DC] [V, AC]	60/110/125/220 110/125/230, 1~, 50/60 Hz 220/380/415, 3~, 50/60 Hz							
Maintenance	25 years							
All values in accordance with IEC; other values on request								

Table 4.1-7: Vertical-break disconnector

1
2
3
4
5
6
7
8
9
10
11
12
?

Technical data		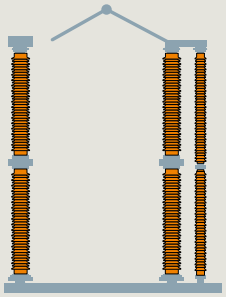		
Design		Knee-type		
Rated voltage		123	550	800
Rated power-frequency withstand voltage 50 Hz/1 min				
To earth and between phases Across the isolating distance	[kV] [kV]	230 265	620 800	830 1,150
Rated lightning impulse withstand voltage 1.2/50 µs				
To earth and between phases Across the isolating distance	[kV] [kV]	550 630	1,550 1,550 (+315)	2,100 2,100 (+455)
Rated switching impulse withstand voltage 250/2,500 µs				
To earth and between phases Across the isolating distance	[kV] [kV]	– –	1,175 900 (+450)	1,550 1,200 (+650)
Rated normal current up to	[A]	4,000		
Rated peak withstand current up to	[kA]	100	160	160
Rated short-time withstand current up to	[kA]	40	63	63
Rated duration of short circuit	[s]	1/3		
Icing class		10/20		
Temperature range	[°C]	–60/+50		
Operating mechanism type		Motor operation/Manual operation		
Control voltage	[V, DC] [V, AC]	60/110/125/220 220...230, 1~, 50/60 Hz		
Motor voltage	[V, DC] [V, AC]	60/110/125/220 110/125/230, 1~, 50/60 Hz 220/380/415, 3~, 50/60 Hz		
Maintenance		25 years		
All values in accordance with IEC; other values on request				

Table 4.1-8: Knee-type disconnector

POWEREN.IR

1
2
3
4
5
6
7
8
9
10
11
12
?

Technical data	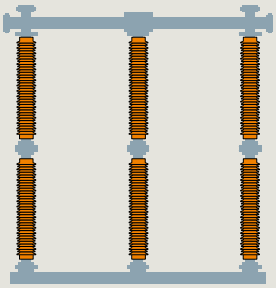							
Design	Double-side break							
Rated voltage	123	145	170	245	300	420	550	800
Rated power-frequency withstand voltage 50 Hz/1 min								
To earth and between phases [kV] Across the isolating distance [kV]	230 265	275 315	325 375	460 530	380 435	520 610	450 520	830 1,150
Rated lightning impulse withstand voltage 1.2/50 µs								
To earth and between phases [kV] Across the isolating distance [kV]	550 630	650 750	750 860	1,050 120	1,050 1,050 (+170)	1,425 1,425 (+240)	1,550 1,550 (+315)	2,100 2,100 (+455)
Rated switching impulse withstand voltage 250/2,500 µs								
To earth and between phases [kV] Across the isolating distance [kV]	– –	– –	– –	– –	850 700 (+245)	1,050 900 (+345)	1,175 900 (+450)	1,550 1,200 (+650)
Rated normal current up to [A]	5,000							
Rated peak withstand current up to [kA]	160							
Rated short-time withstand current up to [kA]	63							
Rated duration of short circuit [s]	1/3							
Icing class	10/20							
Temperature range [°C]	–60/+50							
Operating mechanism type	Motor operation/Manual operation							
Control voltage [V, DC] [V, AC]	60/110/125/220 220...230, 1~, 50/60 Hz							
Motor voltage [V, DC] [V, AC]	60/110/125/220 110/125/230, 1~, 50/60 Hz 220/380/415, 3~, 50/60 Hz							
Maintenance	25 years							
All values in accordance with IEC; other values on request								

Table 4.1-9: Double-side break

For further information:
siemens.com/energy/disconnector

4.2. High-voltage components

4.2.1 Surge arresters

The main task of an arrester is to protect equipment from the effects of overvoltages. During normal operation, an arrester should not have any negative effects on the power system. The arrester must also be able to withstand typical surges without incurring any damage. Non-linear resistors fulfill these requirements thanks to their properties:

- Low resistance during surges to limit overvoltages
- High resistance during normal operation to avoid negative effects on the power system
- Sufficient energy absorption capability for stable operation.

With this type of non-linear resistor, there is only a small flow of current when continuous operating voltage is applied. In the event of surges, however, excess energy can be quickly removed from the power system by a high discharge current.

High-voltage surge arresters

Non-linear resistors
Non-linear resistors made of metal oxide (MO) have proved particularly suitable for this use. The non-linearity of MO resistors is considerably high, which is why MO arresters do not need series gaps (fig. 4.2-1).

Siemens has many years of experience with arresters – the previous gapped SiC arresters and the new gapless MO arresters – in low-voltage systems, distribution systems, and transmission systems. They are usually used for protecting transformers, generators, motors, capacitors, traction vehicles, cables and substations.

There are special applications such as the protection of:

- Equipment in areas at risk of earthquakes or heavy pollution
- Surge-sensitive motors and dry-type transformers
- Generators in power stations with arresters that possess a high degree of short-circuit current strength
- Gas-insulated high-voltage metal-enclosed switchgear (GIS)
- Valves in HVDC transmission installations
- Static compensators
- Airport lighting systems
- Electric smelting furnaces in the glass and metals industries
- High-voltage cable sheaths
- Test laboratory apparatus.

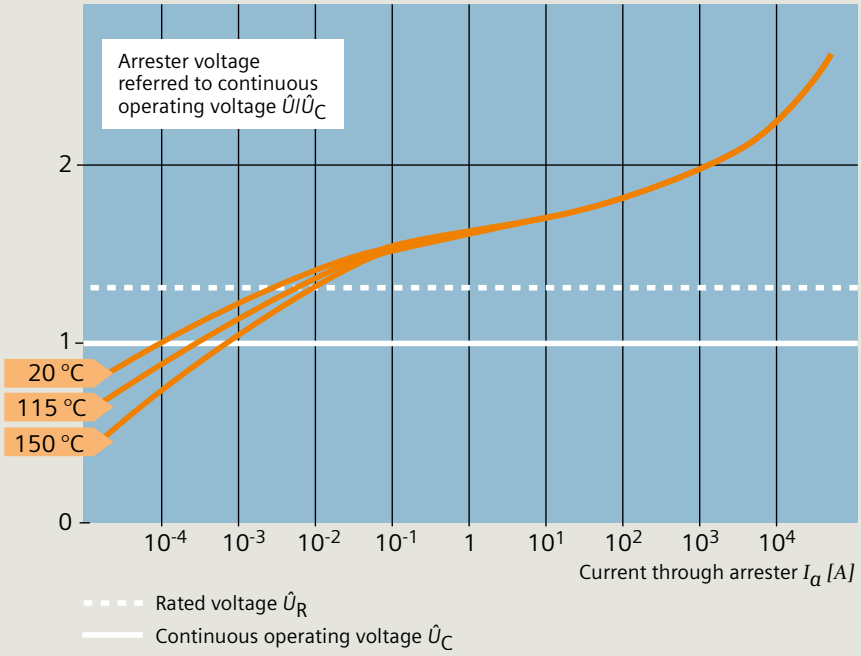

Fig. 4.2-1: Current / voltage characteristics of a non-linear MO arrester

1
2
3
4
5
6
7
8
9
10
11
12
?

MO arresters are used in medium-, high-, and extra high-voltage power systems. Here, the very low protection level and the high energy absorption capability provided during switching surges are especially important. For high-voltage levels, the simple construction of MO arresters is always an advantage. Another very important feature of MO arresters is their high degree of reliability when used in areas with a problematic climate, for example in coastal and desert areas, or in regions affected by heavy industrial air pollution. Furthermore, certain special applications have only been made possible thanks to the introduction of MO arresters. One example is the protection of capacitor banks in series reactive-power compensation equipment, which requires extremely high energy absorption capabilities.

Tradition and innovation
Fig. 4.2-2 shows a Siemens MO arrester in a traditional porcelain housing, a well-proven technology representing decades of Siemens experience. Siemens also offers surge arresters with polymer housings for all system voltages and mechanical requirements.

Applications as line surge arresters
The use of surge arresters on hazardous stretches of a power line helps improve network protection and increases the reliability of the entire transmission system (fig. 4.2-3, fig. 4.2-4).

Offering a highly efficient combination of low weight, outstanding strength, and safety features, Siemens 3EL surge arresters are ideally suited for this purpose.

These arresters are divided into two subgroups:
- Cage Design™ arresters
- Composite hollow core design arresters.

Fig. 4.2-2: Surge arrester in traditional porcelain housing; available for system voltages up to 800 kV

Fig. 4.2-3: 400 kV line in Bulgaria, NGLA solution realized with 3EL2

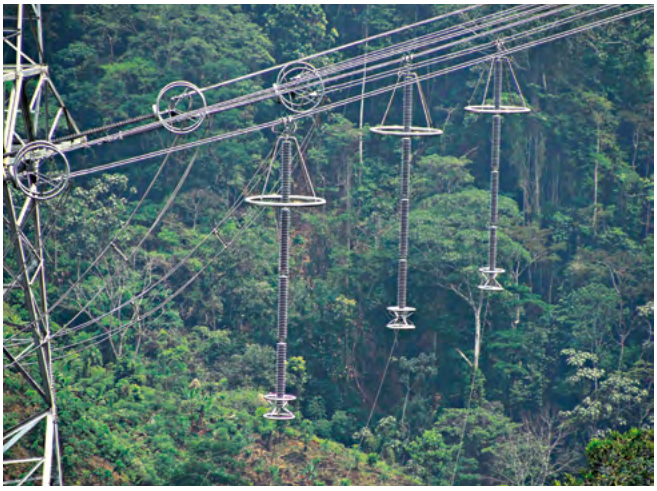

Fig. 4.2-4: 550 kV line in Colombia, NGLA solution realized with 3EL2

1
2
3
4
5
6
7
8
9
10
11
12
?

Siemens provides two solutions for line surge arresters:

Non-gapped line arresters (NGLA) (fig. 4.2-5)
Non-gapped line surge arresters offer a high degree of mounting flexibility and operational reliability. Depending on the tower design and the arrangement of insulators and lines, these arresters can either be installed directly on the insulators or on the tower. Thanks to their high energy absorption capacity, non-gapped line arresters ensure a very high level of protection against overvoltages caused by lightning and network-generated switching impulse currents.

Siemens 3EL1, 3EL2, 3EL3, 3EL5 surge arresters are available as NGLA types.

Externally gapped line arresters (EGLA) (fig. 4.2-6)
Siemens EGLA line surge arresters of the 3EV1, 3EV2, and 3EV5 series have an external spark gap placed in series that galvanically isolates the active part of the line surge arrester from the line voltage under normal conditions. In case of lightning, the spark gap is ignited and the dangerous overvoltage is safely discharged through the resulting arc. The active component limits the subsequent current to ensure that the arc is extinguished within the first half-cycle of the operating current frequency.

The series varistor units (SVU) of the EGLA 3EV1, 3EV2 and 3EV5 product lines are based on the respective 3EL1, 3EL2 and 3EL5 product lines.

Fig. 4.2-5: Mounting on a line wire

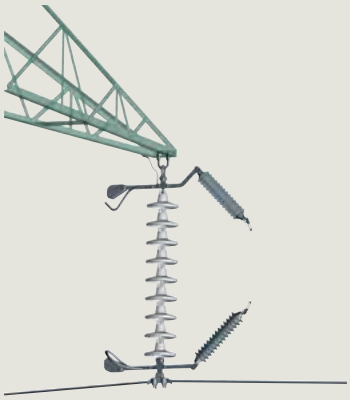

Fig. 4.2-6: Mounted directly on an insulator

Fig. 4.2-7 shows a cross section of a composite hollow core design arrester. The housing consists of a fiberglass-reinforced plastic tube with insulating sheds made of silicone rubber. The advantages of this design, which has the same pressure relief device as an arrester with porcelain housing, include completely safe and reliable pressure relief, high mechanical strength even after pressure relief, and excellent pollution-resistant properties. The advanced mechanical features mean that Siemens arresters with a polymer housing (type 3EQ) can also serve as post insulators. The pollution-resistant properties are the result of the water-repellent effect (hydrophobicity) of the silicone rubber, which can even be transferred to pollution layers.

The newest types of polymer surge arresters also feature the cage design. They use the same MO resistors as the 3EP and 3EQ types, resulting in the same excellent electrical performance. The difference is that the 3EL (fig. 4.2-8) types achieve their mechanical strength from a cage built up by fiber-reinforced plastic rods. Furthermore, the whole active part is directly and entirely molded with silicone rubber to prevent moisture ingress and partial discharges. The polymer-housed high-voltage arrester design chosen by Siemens and the high-quality materials Siemens used offer many advantages, including a long service life and suitability for outdoor use, high mechanical stability, and ease of disposal.

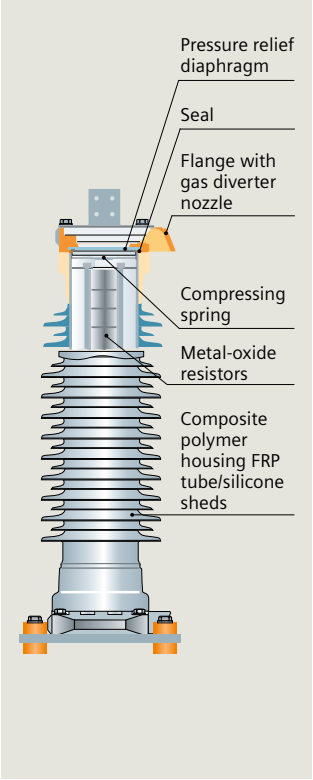

Fig. 4.2-7: Cross section of a polymer-housed arrester in tube design

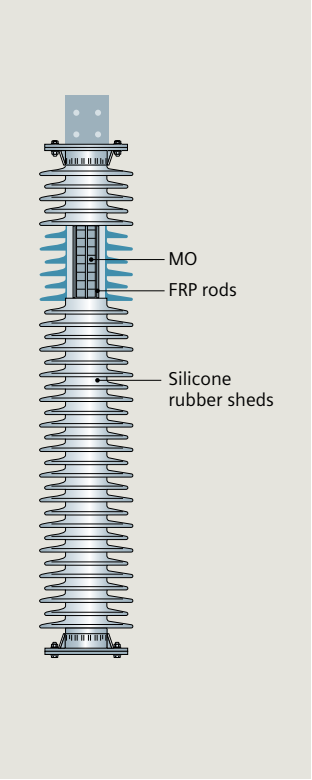

Fig. 4.2-8: 3EL-range surge arrester in Cage Design™

1
2
3
4
5
6
7
8
9
10
11
12
?

Another important design is the gas-insulated metal-enclosed surge arrester (GIS arresters, fig. 4.2-9). Siemens has been making these arresters for more than 25 years. When GIS arresters are used with gas-insulated switchgear, they usually offer a higher protective safety margin compared to when used with outdoor-type arresters. This is for two reasons: Firstly, they can be installed closer to the item that needs protection, so that traveling wave effects can be limited more effectively. Secondly, compared with the outdoor type, inductance of the installation is lower (both that of the connecting conductors and that of the arrester itself). This means that the protection offered by GIS arresters is superior to that offered by any other method, especially in the case of surges with a very steep rate of rise or high frequency, which gas-insulated switchgear is exceptionally sensitive to.

Monitoring

Siemens also offers a wide range of products for diagnosis and monitoring of surge arresters. The innovative arrester condition monitor (fig. 4.2-11) is the heart of the future-proof (IEC 61850) monitoring product line.

Early detection of relevant changes through efficient equipment monitoring

Due to continuously growing worldwide power demand, more and more power networks are required to transmit higher loads – sometimes up to the limits of their capacity. This makes reliable, responsible network operation an increasingly difficult challenge. In many of today's markets, transmission and distribution system operators are also liable for compensation in the case of power failures. And natural events like lightning can cripple entire networks. As a result, many network operators are seeking solutions to increase the reliability of their transmission systems. Equipment monitoring is a proven method for the recording of operating states and remaining service life, providing the operator with important asset management data and enabling the immediate assessment of a network's overall state. Surge arresters are highly reliable components in power transmission and distribution systems. When operated in accordance with their specifications, their service life can reach up to 30 years without any maintenance. Nevertheless, overloads that can cause arrester failure and even endanger the safety of the network may sometimes occur. Equipment monitoring helps detect changes and faults at the earliest possible stage, and supports security of supply on a whole new level. Siemens provides a complete line of monitoring devices with a variety of innovative functionalities, including wireless download of monitoring arrester data (fig. 4.2-10), that can be perfectly matched to the customer requirements, ensuring that impending faults will be detected as early as possible and before security of supply is compromised.

An overview of the complete range of Siemens arresters appears in table 4.2-1 to table 4.2-2.

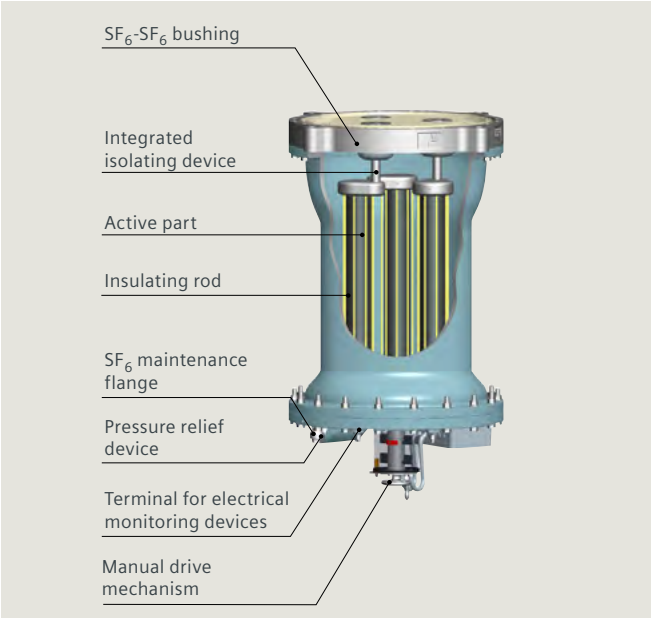

Fig. 4.2-9: Gas-insulated metal-enclosed arrester (GIS arrester)

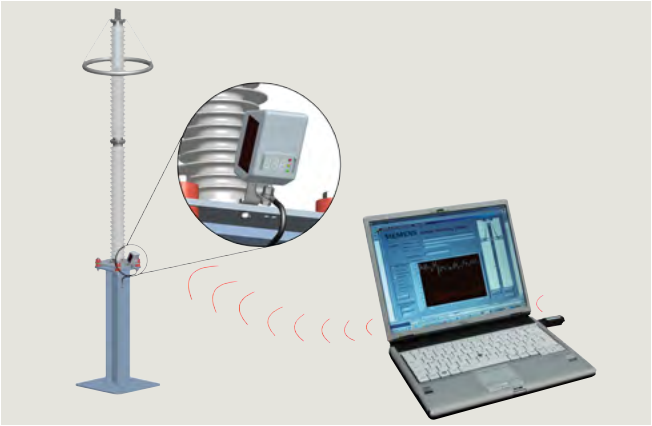

Fig. 4.2-10: Wireless arrester condition monitor (ACM) data download

Fig. 4.2-11: Arrester condition monitor (ACM)

1
2
3
4
5
6
7
8
9
10
11
12
?

	3EP5	3EP4	3EP6	3EP3	3EL5	3EL1	3EL2	3EL3	3EQ1	3EQ4	3EQ3	3EQ5
Applications	Medium- and high-voltage systems	Medium- and high-voltage systems	High-voltage systems	High-voltage systems, HVDC, SC&SVC applica-tions	Medium- and high-voltage systems, station and line surge arrester	Medium- and high-voltage systems, station and line surge arrester	Medium- and high-voltage systems, station and line surge arrester	High-voltage systems, station and line surge arrester	Medium- and high-voltage systems	High-voltage systems	High-voltage systems, HVDC, SC&SVC applica-tions	High-voltage systems, HVDC applica-tions
Highest voltage of the system (U_s) kV	123	362	800	800	145	252	550	800	362	800	800	1200
Maximum rated voltage (U_r) kV	96	288	588	624	126	288	468	588	288	588	624	850
Maximum nominal discharge current (I_n) kA	10	10	20	20	10	10	20	20	10	20	20	20
Maximum thermal energy rating (W_{th}) kJ/kV$_r$	7.0	7.0	14.0	42.0	4.5	6.0	9.0	14.0	7.0	18.0	42.0	48.0
Maximum repetitive charge transfer rating (Q_{rs}) C	2	2	3.6	12.0	1	1.6	2.4	3.6	2	6	12.0	16.0
Rated short-circuit current (I_s) kA	50	65	65	65	20	65	65	65	50	80	80	80
Bending moment dynamic SSL kNm	2.0	4.5	30.0	34.0	0.5	1.2	4.0	10.0	6.0	38.0	72.0	225.0
Housing material	Porcelain	Porcelain	Porcelain	Porcelain	Silicone	Silicone	Silicone	Silicone	Silicone	Silicone	Silicone	Silicone
Design principle	Hollow insulator				Cage design, silicone directly molded onto MOV				Hollow insulator, silicone molded onto FRP tube			
Installation	Outdoor											
Standard	IEC 60099-4, Ed. 3.0 (2014) and IEEE C62.11 (2012)											

Table 4.2-1: High-voltage metal-oxide surge arresters (72.5 to 1,200 kV)

1
2
3
4
5
6
7
8
9
10
11
12
?

	3ES5-M/N 3-phase	3ES2-E 1-phase	3ES6-L/X 1-phase	3ES5-H 1-phase	3ES6-J	3ES5-C/D with oil-SF_6 1-phase
						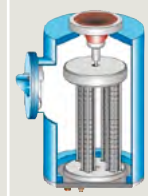
Applications	High-voltage systems, protection of metal-enclosed, gas-insulated switchgear and transformers					
Highest voltage of the system (U_s) kV	170	170	420	550	800	550
Maximum rated voltage (U_r) kV	156	156	396	444	612	444
Maximum nominal discharge current (I_n) kA	20	20	20	20	20	20
Maximum thermal energy rating (W_{th}) kJ/kV_r	10.0	10.0	14.0	14.0	14.0	14.0
Maximum repetitive charge transfer rating (Q_{rs}) C	2.4	2.4	3.2	3.2	3.2	3.6
Rated short-circuit current (I_s) kA	50/65	50	65/80	65	65	65
Bushing type	M/N	E	L/X	H	J	C/D
Bushing	SF_6-SF_6	SF_6-SF_6	SF_6-SF_6	SF_6-SF_6	SF_6-SF_6	Oil-SF_6
Number of phases	1	1	1	1	1	1

Table 4.2-2: Metal-oxide surge arresters for GIS (72.5 to 800 kV)

1
2
3
4
5
6
7
8
9
10
11
12
?

	ACM advanced	ACM basic	Surge counter
Concept	Electronic	Electronic	Electromechanic
Measured variables	Analyzes surge current impulses (time stamp, peak value, pulse width, energy content) Total leakage current 3rd harmonic of leakage current with temperature correction and harmonic compensation (3 LEDs) Arrester energy absorption	Number of surge current impulses Total leakage current 3rd harmonic of leakage current with temperature correction and harmonic compensation (3 LEDs)	Number of surge current impulses
Power supply	Solar	Solar	None
Remote indication	Wireless	No	Special model AC: wired via aux. contact
Installation	Integrated into ground wire	Integrated into ground wire	Integrated into ground wire
Order no.	3EX5 080-1 3EX5 085 (USB wireless module)	3EX5 080-0	3EX5 030 3EX5 030-1

Table 4.2-3: Overview of monitoring devices for surge arresters

1
2
3
4
5
6
7
8
9
10
11
12
?

	Surge counter with leakage current indication	Sensor and display	Control spark gap	LCM 500
Concept	Electromechanic	Electromechanic	Spark gap	Electronic
Measured variables	Number of surge current impulses Total leakage current (including DC)	Number of surge current impulses Total leakage current	Number of surge current impulses	Total leakage current 3rd harmonic of leakage current
Power supply	None	None	None	Battery/mains
Remote indication	Special model AC: wired via aux. contact	Wired	Special model: via optical fiber*	Special model
Installation	Integrated into ground wire	Sensor integrated into ground wire/display wired	Integrated into ground wire	Portable/clamp-on ammeter
Order no.	3EX5 050 3EX5 050-1 3EX5 050-2	3EX5 060 3EX5 062	3EX6 040 3EX6 020*	LCM 500

Table 4.2-4: Overview of monitoring devices for surge arresters

For further information:
Arresters
siemens.com/energy/arrester

4.2.2 Instrument transformers

High-voltage instrument transformers

Electrical instrument transformers transform high currents and voltages into standardized low and easily measurable values that are isolated from the high voltage. When used for metering purposes, instrument transformers provide voltage or current signals that are very accurate representations of the transmission line values in both magnitude and phase. These signals allow accurate determination of revenue billing.

When used for protection purposes, the instrument transformer outputs must accurately represent the transmission line values during both steady-state and transient conditions. These critical signals provide the basis for circuit-breaker operation under fault conditions, and as such are fundamental to network reliability and security.

Instrument transformers used for network control supply important information for determining the state of the operating conditions of the network.

Reliability and security

Reliability of an instrument transformer refers to its ability to consistently satisfy prescribed performance criteria over its expected useful lifetime under specified operating conditions. Security refers to the acceptability and consequences of the instrument transformer failure mode in the event that it does fail, due to either being subjected to stresses in excess of those for which it was designed, or due to reaching the end of its expected service life.

The reliability and security characteristics of an instrument transformer are governed by the electrical and insulation design, the manufacturing and processing technology used, and the specific physical arrangement. The partial discharge performance under in-service conditions is a determining factor in the life expectancy and long-term reliability of an instrument transformer.

IEC standards for oil-immersed or gas-filled devices require a partial discharge value of less than 10 pC at U_{max}. Due to the demanding requirements of today's HV and UHV networks, the Trench Group has chosen to adopt even more stringent internal requirements. As such, Trench instrument transformers typically perform much better than required by these standards, and have proven field experience.

Oil-immersed instrument transformers

The reliability and security of Trench oil-insulated instrument transformers is proven by in-service experience spanning almost 100 years, with more than 100,000 units in operation under a wide range of environmental conditions in almost every country worldwide. The transformer is based on a state-of-the-art design and a secure failure mode approach. In the event of unexpected stresses from the network, secure failure is achieved through the use of a "barrier construction" design in the free oil section. This approach consists of inserting insulating barriers at critical points through the free oil space, thereby preventing the formation of fiber bridges.

Furthermore, a rupture of the housing, particularly of the hollow insulator with built-in finely graded capacitor bushing, is improbable because of the safe dimensioning of the bushing and the solid electrical connection between the core housing and the ground.

If overpressure occurs, protection is guaranteed by the:
- Welded elastic housing
- Stainless-steel bellows for oil expansion.

Both the welded seam, which connects the upper and lower portions of the head housing, and the metallic bellows are designed to act as pressure relief points in the event of severe internal pressure buildup.

Because the unit has a normal internal oil pressure of approximately 1 bar absolute, it is possible to design these pressure relief points to rupture at very moderate pressures. Additional safety is achieved by the selection of composite insulators, available for the whole range as an alternative to the traditional porcelain.

Pressure relief for capacitor voltage transformers is provided by a bellows puncture pin, and through the use of porcelain, which is strong enough to release any rapid pressure rise through the seal plates at the ends of the porcelain rather than via explosion of the porcelain itself.

Gas-insulated instrument transformers

The reliability and security of Trench gas-insulated instrument transformers is based on over 50 years of innovation with gas-insulated units operating under a wide range of environmental conditions.

Explosion-proof design

The current Trench gas-insulated instrument transformers were initially designed in 1965 at the request of customers who sought to achieve explosion-proof operation. SF_6 gas insulation, combined with composite insulators, is particularly suitable for this, because in the event of an internal flashover, the pressure increase will be linear and hence technically manageable. A controlled pressure relief device at the head of the transformer (rupture disc) eliminates mechanical stresses in the housing, meaning that only the rupture disc is released. Gas escapes, however the complete transformer remains intact and no explosion occurs.

Most reliable insulation properties

SF_6 gas is the main insulation medium between high-voltage and earth potential. A stable quality can be guaranteed by the use of SF_6 gas in accordance with IEC 60137 (2005) / ASTM 2472 D thanks to how this inert gas shows no aging even under the highest electrical and thermal stresses. The insulation properties remain unchanged throughout its lifetime. All of these features guarantee an operational period of many years without the need to control the insulation condition.

Full functional security and monitoring
The guaranteed SF_6 leakage rate is less than 0.5% per year. The gas pressure can be checked on site or by means of a remote control device, for example, a densimeter with contacts for remote control. In the case of loss of SF_6 pressure, the transformer still operates at rated pressure.

Environmentally safe under severe conditions
SF_6 gas is non-toxic, non-flammable and non-corrosive, being chemically stable with high breakdown strength and minimal effects on the environment. This medium allows easy waste management of the transformers. Furthermore, the hydrophobic features of the composite insulator result in faultless operation even in saline fog or polluted conditions. The change of cores or windings can also be easily implemented, even after years, to meet new requirements such as additional metering, thus offering long-term benefits.

Current transformers
All Trench current transformer (CT) designs are based on "head type" construction. CTs are available with either oil (fig. 4.2-15) or SF_6 gas dielectric systems (fig. 4.2-12, 4.2-13).

Features of oil-immersed current transformers
- Compliant with all national and international standards
- Available for the full voltage range from 72.5 kV up to 550 kV and full current range from a few amperes up to 5,000 A with multiple-turn primaries for small primary currents
- Exceptional control of internal and external insulation stresses through the use of a proprietary finely graded bushing system
- Short, symmetrically arranged low-reactance bar-type primary conductor permits higher short-circuit currents up to 100 kA and avoids large voltage drops across the primary winding
- Uniformly distributed secondary windings guarantee accurate transformation at both rated and high currents
- Superior transient performance
- Virtually unaffected by stray external magnetic fields
- Ratio change available either on primary side or secondary side
- Excellent seismic performance due to low weight, minimal oil volume, optimized design of flanges, large range of porcelain strengths, and interconnections
- Hermetically sealed by stainless-steel metallic bellows and high-quality fluorosilicone O-rings
- Exclusive use of corrosion-resistant materials
- Accuracy stable over lifetime
- Full range of products available with composite insulator.

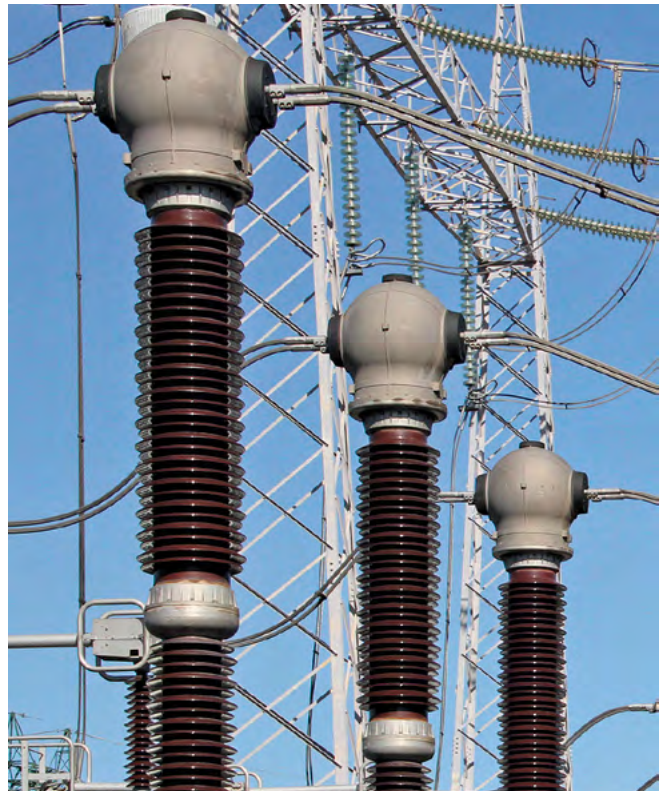

Fig. 4.2-12: 420 kV gas-insulated current transformers

Fig. 4.2-13: 420 kV gas-insulated current transformers

Fig. 4.2-14: 800 kV gas-insulated current transformers

1
2
3
4
5
6
7
8
9
10
11
12

Features of gas-insulated current transformers

- Compliant with all national and international standards
- Available for the full voltage range from 72.5 kV up to 800 kV, and full current range from 100 A up to 6,000 A
- Optimum field grading is achieved by a fine condenser grading system specially developed for this application
- Low-reactance, bar-type primary providing optimal short-circuit performance
- Multiple-turn primaries for small primary currents and uniformly distributed secondary windings guarantee accurate transformation at both rated and high currents
- Superior transient performance
- Replacing cores on assembled units is possible without affecting the integrity of the high-voltage insulation
- Explosion-proof design thanks to the compressible insulation medium SF_6 gas and rupture disc
- Excellent seismic performance due to composite insulator properties
- Exclusive use of corrosion-resistant materials
- Accuracy stable over lifetime.

DC (zero-flux) current transformers for AIS

AIS current transformers for DC measurement consist of a zero-flux sensor that is implemented into the shell of a GIF current transformer. It is a compact solution for HVDC switchgear (fig. 4.2-16).

Features of DC current transformers

- Based on proven AC design
- Available for 550 kV
- High accuracy
- Harmonics measurement
- Additional Rogowski coil for measurement of very high frequencies
- Compact design
- Explosion proof
- No fire hazard
- Designed for indoor and outdoor installation
- Low investment in civil works
- Can be placed in converter hall with small footprint.

Our portfolio also includes optical current transformers (see chapter on non-conventional instrument transformers).

Inductive voltage transformers

Trench inductive voltage transformers are designed to provide voltage for metering and protection applications. They are available with either oil (fig. 4.2-17) or SF_6 gas dielectric systems (fig. 4.2-15).

Fig. 4.2-15: 300 kV oil-immersed current transformers in Alberta, Canada

Fig. 4.2-16: 550 kV zero-flux current transformer

Fig. 4.2-17: 420 kV oil-paper-insulated inductive voltage transformers

Features of oil-immersed inductive voltage transformers

- Compliant with all national and international standards
- Available from 72.5 kV up to 550 kV
- Excellent control of internal and external insulation stresses through the use of a proprietary finely graded bushing system
- Optimized high-voltage coil ensures identical electric stresses under both transient and steady-state conditions
- Suitable for line discharging
- Superior transient performance
- Virtually unaffected by stray external magnetic fields
- Applicable as a low-cost alternative to small power transformers
- Excellent seismic performance due to low weight, minimal oil volume, optimized design of flanges, large range of porcelain strengths, and interconnections
- Hermetically sealed stainless-steel metallic bellows for units rated 123 kV and above
- Exclusive use of corrosion-resistant materials
- Accuracy stable over lifetime
- Full range of products available with composite insulator.

Features of gas-insulated inductive voltage transformers

- Compliant with all national and international standards
- Available for the full voltage range from 72.5 kV up to 800 kV
- Optimum field grading accomplished by a fine condenser grading system specially developed for this application
- Optimized high-voltage coil ensures identical electric stresses under both transient and steady-state conditions
- Suitable for line discharging
- Virtually unaffected by external stray magnetic fields
- Wide-range ferroresonance-free design without the use of an external damping device (please ask for details)
- Applicable as a low-cost alternative to small power transformers
- Explosion-proof design thanks to the compressible insulation medium SF_6 gas and rupture disc
- Excellent seismic performance due to the properties of the composite insulator
- Exclusive use of corrosion-resistant materials
- Accuracy stable over lifetime.

Combined instrument transformers

The combined instrument transformer offers the station designer the ability to accommodate the current transformer and the voltage transformer in one free-standing unit. This allows optimum use of substation space while yielding cost savings by elimination of one set of mounting pads and support structures. In addition, installation time is greatly reduced. Combined ITs are available with either oil (fig. 4.2-18) or SF_6-gas dielectric systems (fig. 4.2-19 and fig. 4.2-21).

Fig. 4.2-18: 145 kV oil-immersed combined instrument transformer

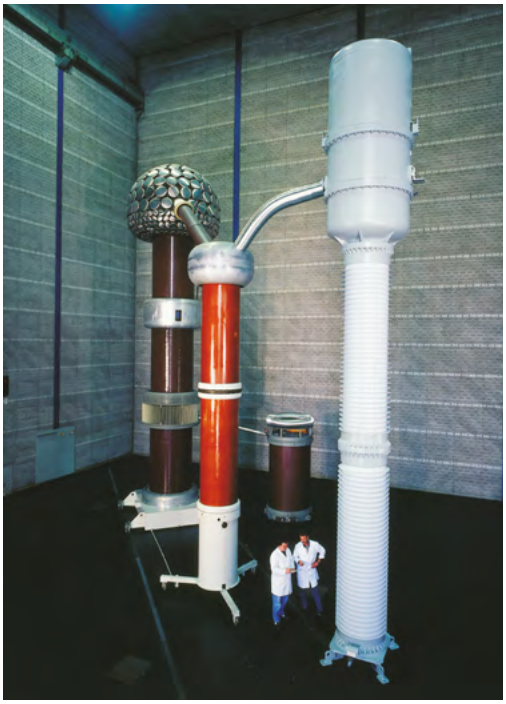

Fig. 4.2-19: 800 kV gas-insulated combined instrument transformers

Features of oil-immersed combined instrument transformers

- Compliant with all national and international standards
- Available for voltage range from 72.5 kV up to 300 kV and full current range of 0.5 A up to 5,000 A
- Comparably smaller footprint as a consequence of combining the voltage and current-sensing functions into one unit
- Exceptional control of internal and external insulation stresses through the use of a proprietary finely graded bushing system
- Short, symmetrically arranged low-reactance, bar-type primary conductor permits higher short-circuit currents and avoids large voltage drops across primary winding
- Uniformly distributed secondary windings guarantee accurate transformation at both rated and high current
- Suitable for line discharging
- Superior transient performance
- Virtually unaffected by stray external magnetic fields
- Excellent seismic capability as a consequence of low weight, minimal oil volume, optimized design of flanges, large range of porcelain strengths, and interconnections
- Hermetically sealed by stainless-steel metallic bellows and high-quality fluorosilicone O-rings
- Exclusive use of corrosion-resistant materials
- Accuracy stable over lifetime
- Full range of products available with composite insulator.

Features of gas-insulated combined instrument transformers

- Low weight and compact head-type design with voltage transformer section located on top of the current transformer
- Compliant with all national and international standards
- The single-section high-voltage coil (not cascaded) of the voltage transformer section enables a product range for combined instrument transformers of up to 800 kV
- Comparably smaller footprint as a consequence of combining the voltage and current-sensing functions into one unit
- Optimum field grading is accomplished by a fine condenser grading system specially developed for this application
- Low-reactance type primary conductor allows for high short-circuit currents and covers all core standards
- Suitable for line discharging
- Virtually unaffected by external stray magnetic fields
- Wide-range ferroresonance-free design without the use of an external damping device
- Explosion-proof design thanks to the compressible insulation medium SF_6 gas and rupture disc
- Excellent seismic performance due to the properties of the composite insulator
- Exclusive use of corrosion-resistant materials
- Accuracy stable over lifetime.

Capacitor voltage transformers (oil-immersed)

Coupling capacitors (CC) are utilized to couple high-frequency carrier signals to the power line. A CC supplied with an electromagnetic unit is called a capacitor voltage transformer (CVT) and is used to provide voltage for metering and protection applications (fig. 4.2-20).

Fig. 4.2-20: 245 kV capacitor voltage transformers at Oncor substation (USA)

Features of capacitor voltage transformers

- Compliant with all national and international standards
- Available for the high and ultra-high voltage range from 72.5 kV up to 1,200 kV
- Capable of carrier coupling PLC signals to the network
- Optimized insulation system design utilizing state-of-the-art processing techniques with either mineral oil or synthetic insulating fluids
- Stability of capacitance and accuracy over lifetime due to superior clamping system designSuperior transient response characteristics
- Not subject to ferroresonance oscillations with the network or circuit-breaker capacitor
- High-capacitance CVTs can provide enhanced circuit-breaker short line fault/TRV performance when installed in close proximity to EHV circuit-breakers
- Oil expansion by way of hermetically-sealed stainless-steel bellows ensures the integrity of the insulation system over time
- Bellows puncture pin enables release of internal pressure in the event of severe service conditions leading to internal discharges
- Maintenance-free oil-filled cast-aluminum basebox
- Superior transient response characteristics
- Extra high-strength porcelain provides both superior seismic performance and the ability to mount large line traps directly onto the CVT, which saves on installation costs
- Internal company routine tests and quality requirements exceed international standards
- Full range of products available with composite insulator.

Special capacitors
Trench also produces a large range of products based on capacitive elements. Tailor-made products and systems include test capacitors, protection capacitors, energy storage capacitors (fig. 4.2-22), TRV capacitors, grading capacitors, HVAC and HVDC capacitors (coupling capacitors), and resistive-capacitive voltage dividers (see chapter on RC dividers).

Features of special capacitors
- Stacked capacitor packs – controlled pressure
- Common material – paper / foil
- Resistors in parallel a/o serial
- Oil- or gas-insulated
- Available as porcelain or composite insulators.

RC dividers
Resistive-capacitive voltage dividers, also called resistive-capacitive voltage transformers (RCVT), are designed for measurement of the voltage in HVDC transmission systems, air-insulated (AIS) (fig. 4.2-23), or gas-insulated (GIS) switchgear (fig. 4.2-24). In AC transmission systems, the transformers can be used for the measurement of harmonics, providing an accurate representation of the voltage over a wide frequency band (typically from DC up to 500 kHz). Their wide linearity range and output signals are also suitable for modern secondary equipment such as digital protection relays or merging units.

Features of RC dividers
- Designed for single-phase or three-phase system
- Suitable for voltage measurements
- Conform to microprocessor-based secondary technology
- Ferroresonance-free
- Excellent transient characteristics
- Able to perform voltage test on site
- Not necessary to disconnect the RCVT during high-voltage tests on GIS switchgear
- Suitable for NCIT applications
- Significant size and weight reduction.

Fig. 4.2-21: 362 kV gas-filled combined instrument transformer

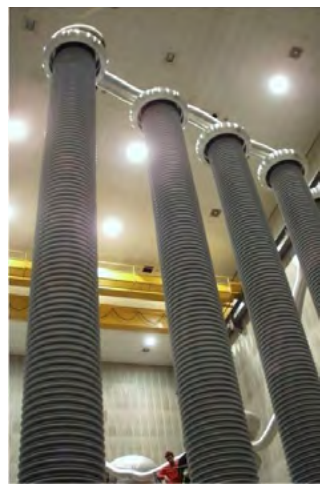

Fig. 4.2-22: Energy storage capacitor

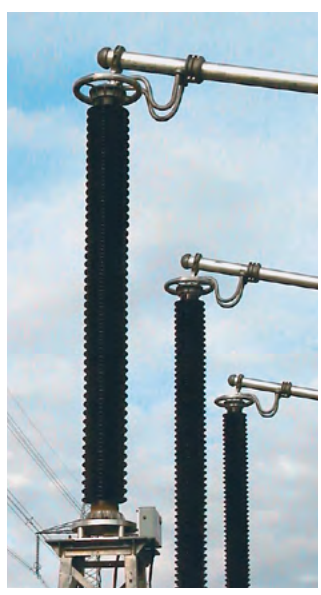

Fig. 4.2-23: 420 kV RC dividers (AC) for AIS at Singlewell Substation, National Grid, UK

Fig. 4.2-24: 145 kV RC divider for GIS

Master of Waves (MoW)
With the increasing importance of measuring efficiency and accuracy across the energy chain, Trench has developed a new product that combines the performance of a standard CVT with that of an RC voltage divider and is particularly suitable for higher accuracy harmonics measurement applications. The customer simply has to connect the existing low-voltage circuits to the CVT side of the MoW and connect the cable to the RCVT side for harmonics measurement (fig. 4.2-25).

Features of MoW
- Available from 72.5 kV to 245 kV, other voltages upon request
- Significant space saving and lower footprint in substation
- Oil-insulated
- Available with porcelain or composite insulators.

Instrument transformers for GIS
Trench also manufactures current and voltage transformers, as well as RC dividers for gas-insulated switchgear.

Features of current transformers for GIS (fig. 4.2-26)
- Custom-designed instrument transformers for each specific application and extended function designs comply with dimensional restrictions, flange sizes, and insulator requirements
- Available up to 550 kV
- Core-in-air (1-phase units) and core-in-gas solutions (1-phase and 3-phase units) available
- Core-in-air solutions enable a minimum use of SF_6
- Perfect transient response time
- Shielded against transient overvoltages in accordance with IEC standards. Special additional shielding is available
- Guaranteed SF_6 leakage rate of less than 0.5% per year
- Explosion-proof design thanks to SF_6 and rupture disc
- All components designed and tested for mechanical stress to withstand up to at least 20 G
- Accuracy classes in accordance with DIN VDE 0414-9-1/-2, IEC 61869, ANSI: IEEE C57.13 (other standards and classes upon request)
- Shock indicators warn against inadmissible acceleration during transportation
- Stable accuracy over lifetime.

Fig. 4.2-25: 170 kV MoW (RTCVT)

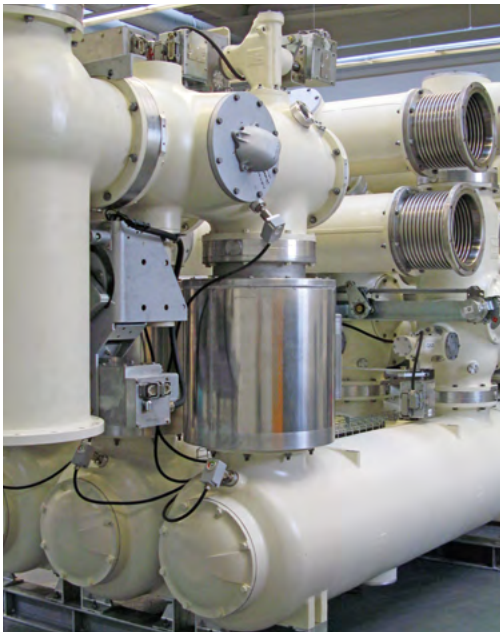

Fig. 4.2-26: 420 kV core-in-air current transformer for GIS

Features of inductive-type instrument transformers for GIS (fig 4.2-27)

- Compliant with all national and international standards regarding pressure vessel codes
- Available up to 800 kV
- Custom-designed voltage transformers for each specific application and extended function designs comply with dimensional restrictions, flange sizes, and insulator requirements
- Standard designs for single-phase and three-phase units
- Prevention of stable ferroresonance occurence through integrated ferroresonance suppression
- Shielded against transient overvoltages in accordance with IEC standards. Special additional shielding is available
- Guaranteed SF_6 leakage rate of less than 0.5% per year
- Explosion-proof design thanks to SF_6 and rupture disc
- All components designed and tested for mechanical stress to withstand up to at least 20 g
- Accuracy classes in accordance with DIN VDE0414-9-1/-2, IEC 61869, ANSI: IEEE C57.13 (other standards and classes upon request)
- Shock indicator warning against unauthorized acceleration during transportation
- Stable accuracy over lifetime.

Electronic voltage measuring system for HVDC
Trench offers special voltage transformers for HVDC systems. These units are primarily used to control the HV valves of the rectifiers or inverse rectifiers. The measuring system consists of an RC voltage divider that provides inputs to a specially designed electronic power amplifier. The high-voltage divider can be supplied either for outdoor operation or for installation into SF_6 gas-insulated switchgear (GIS). The resulting system can accurately transform voltages within a defined burden range with linear frequency response of ANSI up to approximately 10 kHz. Thus, the system is ideal for measurement of dynamic and transient phenomena and harmonics associated with HVDC systems.

Non-conventional instrument transformers
In digital substations with low input power requirements (<2.5 VA), a solution for voltage and current measurement can be provided by non-conventional instrument transformers (NCIT). The NCIT technologies offered by Trench are:

RC dividers for voltage measurement (RCVT – described in a previous chapter) and optical current transformers (OCT).

Trench optical current transformers utilize the Faraday effect for current measurement. The OCT is a potential-free measurement system providing a digital output in accordance with the IEC 61850-9-2 protocol (fig. 4.2-28).

Fig. 4.2-27: 145 kV inductive voltage transformer for GIS

Fig. 4.2-28: Optical current transformer

Features of optical current transformers

- Available for the complete high-voltage range up to 800 kV
- Free-standing or suspended solution
- Full flexibility due to modular system
- Complete absence of electronics within the OCT and on bay level
- Low inherent temperature dependency
- Complete electrical insulation between primary and secondary equipment due to optical fibers
- High bandwidth (harmonics measurement possible)
- Small size and lightweight
- Eco-friendly solution (insulated with dry air)
- Compatible with process bus in accordance with IEC 61850.

Power Voltage Transformers / Station-Service Voltage Transformers

Power voltage transformers for AIS

Power voltage transformers (power VTs) enable power supply for remote customers without the need for major investments. The power VTs simply have to be connected directly to the high-voltage overhead line to ensure customized power supply. A power VT for AIS is shown in fig. 4.2-29.

Features of power VTs for AIS

- Combination of inductive voltage transformer and power transformer
- Available in SF_6 insulation for the full voltage range from 72.5 kV up to 550 kV
- Excellent control of internal and external insulation stresses through the use of a proprietary finely graded bushing system
- Output power up to 125 kVA in single-phase operation
- Three-phase operation possible with three times higher total output power
- Custom-fit secondary voltage – standard 120 / 240V
- Additional adjustment transformers for secondary voltage available
- Metering and protection windings
- 30 kV lightning impulse withstand for secondary and HV neutral
- Overload capability in cycle operation
- Cable discharge option
- Terminal box protection class IP55 / NEMA 4X
- Primary protection by circuit-breaker
- Explosion-proof due to the compressible insulation medium SF_6 and rupture disc
- Seismic performance tested up to 0.5 g (higher verified by calculation)
- Exclusive use of corrosion-resistant material
- Easy transportation and handling due to light weight
- Online monitoring system for low- and high-voltage coils
- Remote supervision of insulation condition
- Minimum maintenance
- Mobile solution on trailer available.

Applications

- Substation Service Voltage Transformer
- Power supply for remote farms and small villages
- Auxiliary power supply for substations
- Power supply during substation construction works.

Fig. 4.2-29: 145 kV power VT for AIS

Fig. 4.2-30: 145 kV power VT for GIS

Power voltage transformers for GIS

An inductive voltage transformer with different active parts becomes a “power VT”, which then allows for a high-voltage test of the primary system without special high-voltage test equipment. A power VT for GIS is shown in fig. 4.2-30.

Features of power VTs for GIS

- Same dimension as standard VTs, and can be operated like a standard VT
- Available from 72.5 kV up to 245 kV
- After testing, the switchgear can be put into operation without mechanical work on the primary circuit (i.e., normally the high-voltage test set must be removed)
- Easy support from neutral testing companies (e.g., OMICRON) or testing institutes
- Power supply via standard socket outlet (e.g., single-phase, 230 V, 16 A)
- Easy transportation and handling due to light weight
- SF_6 gas handling at site not required for test preparation
- Low investment in site-based testing facilities.

High-Voltage Test Systems

Test+ portfolio
Trench AC high-voltage test systems cover an extensive operating range; from feeding, controls, instrumentation, data recording, and protection, to individual HV setups. See fig. 4.2-31.

Features of Trench HV test systems
- Available from 230 kV up to 1,200 kV
- Versions for GIS and for AIS testing (fully encapsulated gas-insulated setups; setups in air with "open" high voltage, classical lab type)
- Combined version for GIS & AIS testing with same system
- Individual customized system setup
- Small, optimized footprint
- Safe HV testing: no open high voltage in GIS version
- Highly sensitive PD testing
- Effective self-shielding
- Extremely low PD noise in GIS version
- Usable in noisy, non-shielded production halls.

Applications
- AC testing & PD measurement
- Accuracy calibration (for VTs and sensors)
- "Classical" laboratoriesFactory labs
- Mobile testing on site.

An overview of the range of Trench instrument transformers and their standard ratings can be seen in table 4.2-5 to table 4.2-11.

Fig. 4.2-31: Test+ systems

1
2
3
4
5
6
7
8
9
10
11
12
?

Current transformers for air-insulated switchgear (AIS)

Type		SAS				TAG			IOSK		
Voltage range	[kV]	72.5 – 800				72.5 – 550			72.5 – 550		
Insulation medium		SF_6				SF_6			Oil		
Composite insulator		×				×			×		
Porcelain insulator						×			×		
		Technical data									
Voltage level	[kV]	72.5	123	145	170	245	300	362	420	550	800
Rated power-frequency withstand voltage	[kV]	140	230	275	325	460	460	510	630	680	975
Rated lightning impulse withstand voltage	[kV]	325	550	650	750	1,050	1,050	1,175	1,425	1,550	2,100
Rated switching impulse withstand voltage	[kV]	–	–	–	–	–	850	950	1,050	1,175	1,550
Rated normal current up to	[A]	5,000 (6,000 on special request for gas-insulated units)									
Output current	[A]	1 – 2 – 5									
Rated short-time thermal current	[kA]	63 (100 on special request)									
Rated duration of short circuit	[s]	1 – 3									
Rated dynamic current	[kA]	160 (200 on special request)									
Rated frequency	[Hz]	16 ⅔ – 50 – 60									
Creepage distance	[mm/kV]	25 – 31 (higher upon request)									
Temperature range	[°C]	–50 – +40 (other values upon request)									
Insulation class		E (SF_6-insulated devices) – A (oil-insulated devices)									
Metering accuracy class		0.1 – 0.2 – 0.2S – 0.5 – 0.5S – 1.0									
Protection accuracy class		5P – 10P – TPY – TPX – TPZ – TPS – PR – PX									
Values in accordance with IEC; other values like ANSI are available											

Table 4.2-5: Technical data of Trench current transformers for air-insulated switchgear (AIS); type SAS, TAG, IOSK

1
2
3
4
5
6
7
8
9
10
11
12
?

Voltage transformers / RC dividers for air-insulated switchgear (AIS)

Type		SVS	TVG	VEOT/VEOS	TCVT	AC RCD	DC RCD
Voltage range	[kV]	72.5 – 800	72.5 – 420	72.5 – 550	72.5 – 1200	72.5 – 800	72.5 – 800
Insulation medium		SF_6	SF_6	Oil	Oil	Oil	Oil / SF_6
Composite insulator		×	×	×	×	×	×
Porcelain insulator			×	×	×	×	×

		Technical data									
Voltage level	[kV]	72.5	123	145	170	245	300	362	420	550	800
Rated power-frequency withstand voltage	[kV]	140	230	275	325	460	460	510	630	680	975
Rated lightning impulse withstand voltage	[kV]	325	550	650	750	1,050	1,050	1,175	1,425	1,550	2,100
Rated switching impulse withstand voltage	[kV]	–	–	–	–	–	850	950	1,050	1,175	1,550
Output voltage	[V]	110/√3 – 200/√3 (other values upon request) (AC&DC RC divider: 5 – 200V)									
Rated voltage factor		1.2 – 1.5 – 1.9 (other values upon request)									
Rated frequency	[Hz]	16 ⅔ – 50 – 60 (AC&DC RC divider: 0 – 1 MHz)									
Creepage distance	[mm/kV]	25 – 31 (higher upon request)									
Temperature range	[°C]	–50 – +40 (other values upon request)									
Insulation class		E (SF_6 insulated devices) – A (oil-insulated devices)									
Metering accuracy class		0.1 – 0.2 – 0.5 – 1.0 – 3.0									
Output burden (only AC)		for different classes according to customer specification (very low output burden for RC divider > 100 kΩ)									
Protection accuracy class		3P – 6P									
Output burden (only AC)		for different classes according to customer specification									
Thermal limiting output	[VA]	3,000 [1)]									

Values in accordance with IEC; other values like ANSI are available; [1)] valid only for voltage transformers

Table 4.2-6: Technical data of Trench voltage transformers for air-insulated switchgear (AIS); type SVS, TVG, VEOT/VEOS, TCVT, AC RCD, DC RCD

1
2
3
4
5
6
7
8
9
10
11
12
?

Combined instrument transformers for air-insulated switchgear (AIS)											
Type		SVAS				AVG			IVOKT		
Voltage range	[kV]	72.5 – 800				72.5 – 245			72.5 – 300		
Insulation medium		SF_6				SF_6			Oil		
Composite insulator		×				×			×		
Porcelain insulator						×			×		
Technical data											
Voltage level	[kV]	72.5	123	145	170	245	300	362	420	550	800
Rated power-frequency withstand voltage	[kV]	140	230	275	325	460	460	510	630	680	975
Rated lightning impulse withstand voltage	[kV]	325	550	650	750	1,050	1,050	1,175	1,425	1,550	2,100
Rated switching impulse withstand voltage	[kV]	–	–	–	–	–	850	950	1,050	1,175	1,550
Rated frequency	[Hz]	16 ⅔ – 50 – 60									
Creepage distance	[mm/kV]	25 – 31 (higher upon request)									
Temperature range	[°C]	–50 – +40 (other values upon request)									
		CT ratings									
Rated normal current up to	[A]	5,000 (6,000 on special request for gas-insulated units)									
Output current	[A]	1 – 2 – 5									
Rated short-time thermal current	[kA]	63 (100 on special request)									
Rated duration of short circuit	[s]	1 – 3									
Rated dynamic current	[kA]	160 (200 on special request)									
Insulation class		E (SF_6-insulated devices) – A (oil-insulated devices)									
Metering accuracy class		0.1 – 0.2 – 0.2S – 0.5 – 0.5S – 1.0									
Protection accuracy class		5P – 10P – TPY – TPX – TPZ – TPS – PR – PX									
		VT ratings									
Output voltage	[V]	110/√3 – 200/√3 (other values upon request)									
Rated voltage factor		1.2 – 1.5 – 1.9 (other values upon request)									
Metering accuracy class		0.1 – 0.2 – 0.5 – 1.0 – 3.0									
Output burden		for different classes according to customer specification									
Protection accuracy class		3P – 6P									
Output burden		for different classes according to customer specification									
Thermal limiting output	[VA]	3000 (other values upon request)									
Values in accordance with IEC; other values like ANSI are available											

Table 4.2-7: Technical data of Trench combined instrument transformers for air-insulated switchgear (AIS); type SVAS, AVG, IVOKT

1
2
3
4
5
6
7
8
9
10
11
12
?

Current transformers for gas-insulated switchgear (GIS)										
Type		SAD/SA								
Voltage range	[kV]	72.5 – 550					72.5 – 550			
Insulation medium		SF_6					–			
		Technical data SAD/SA								
Voltage level	[kV]	72.5	123	145	170	245	300	362	420	550
Output current	[A]	1 – 5								
Rated short-time thermal current	[kA]	31.5 (from 72.5 - 145 kV)			50 (from 170 - 245 kV)		63 (from 300 - 362 kV)		80 (from 420 - 550 kV)	
Rated duration of short circuit	[s]	1 – 3								
Rated dynamic current	[kA]	78.75			125		160			
Rated frequency	[Hz]	16 2/3 – 50 – 60								
Temperature range	[°C]	–35 – +55								
Insulation class		E, F								
Metering accuracy class		0.1 – 0.2 – 0.2S – 0.5 – 0.5S – 1.0								
Protection accuracy class		5P – 10P – TPY – TPX – TPZ – TPS – PR – PX								
Values in accordance with IEC; other values like ANSI are available										

Table 4.2-8: Technical data of Trench current transformers for gas-insulated switchgear (GIS); type SAD / SA

1
2
3
4
5
6
7
8
9
10
11
12
?

Voltage transformers / RC dividers for gas-insulated switchgear (GIS)

Type		SUD/SU					RCVD				
Voltage range	[kV]	72.5 – 800					72.5 – 550				
Insulation medium		SF_6					Oil / SF_6				
		Technical data SUD/SU									
Voltage level	[kV]	72.5	123	145	170	245	300	362	420	550	800
Rated power-frequency withstand voltage	[kV]	140	230	275	325	460	460	510	630	680	975
Rated lightning impulse withstand voltage	[kV]	325	550	650	750	1,050	1,050	1,175	1,425	1,550	2,100
Rated switching impulse withstand voltage	[kV]	–	–	–	–	–	850	950	1,050	1,175	1,550
Output voltage	[V]	110/√3 – 200/√3 (other values upon request) (AC & DC RC divider: 5 – 200V)									
Rated voltage factor		1.2 – 1.5 – 1.9 (other values upon request)									
Rated frequency	[Hz]	16 ⅔ – 50 – 60									
Temperature range	[°C]	–30 – +55 (other values upon request)									
Insulation class		E									
Metering accuracy class		0.1 – 0.2 – 0.5 – 1.0 – 3.0									
Output burden		for different classes according to customer specification									
Protection accuracy class		3P – 6P									
Output burden		for different classes according to customer specification									
Thermal limiting output		2,000						3,000 [1)]			
IID		×	×	×	×	×	×	×	×	×	
Values in accordance with IEC; other values like ANSI are available [1)] valid only for voltage transformers											

Table 4.2-9: Technical data of Trench voltage transformers / RC dividers for gas-insulated switchgear (GIS); type SUD / SU RCVD

1
2
3
4
5
6
7
8
9
10
11
12
?

Power voltage transformers for air-insulated switchgear (AIS)

Type		PSVS							
Technical data									
Voltage level	[kV]	123	145	170	245	300	362	420	550
Rated power-frequency withstand voltage	[kV]	230	275	325	460	460	510	630	680
Rated lighting impulse withstand voltage	[kV]	550	650	750	1,050	1,050	1,175	1,425	1,550
Rated switching impulse withstand voltage	[kV]	–	–	–	–	850	950	1,050	1,175
Output power	[kVA]	up to 125							
Standard output voltage	[V]	120 / 240							
Rated voltage factor		1.5 (30 s)							
Rated frequency	[Hz]	50 – 60							
Creepage distance	[mm/kV]	25 – 31 (higher upon request)							
Standard temperature range	[°C]	–50 [1] – +40 [1]							
Insulation class		E							
Metering accuracy class		0.2 [2] – 0.5 [2] – 1.0 [2] – 3.0							
Protection accuracy class		3P [2] – 6P [2]							

Values in accordance with IEC; other values like ANSI are available [1] lower or higher temperature upon request [2] not under full load condition

Table 4.2-10: Technical data of Trench power voltage transformers for air-insulated switchgear (AIS); type PSVS

1
2
3
4
5
6
7
8
9
10
11
12
?

Power voltage transformers for gas-insulated switchgear (GIS)						
		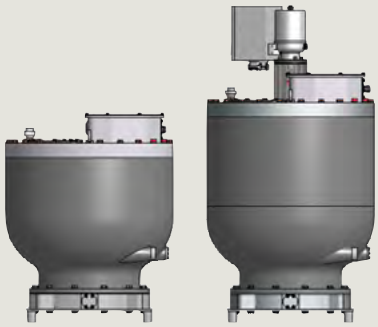				
Type		PSUD				
Technical data						
Voltage level	[kV]	72.5	123	145	170	245
Rated power-frequency withstand voltage	[kV]	140	230	275	325	460
Rated lighting impulse withstand voltage	[kV]	325	550	650	750	1,050
Rated switching impulse withstand voltage	[kV]	–	–	–	–	–
Rated frequency	[Hz]	50 – 60				
Output power	[kVA]	depends on customer-specific load cycle				
Output voltage	[V]	as required (typically 110/√3)				
Rated voltage factor		1.9 for 8 h				
Temperature range	[°C]	–30 – +50				
Insulation class		E				
Metering class		according to IEC 61869-3				
Protection class						
Values in accordance with IEC; other values like ANSI are available						

Table 4.2-11: Technical data of Trench power voltage transformers for gas-insulated switchgear (GIS); type PSUD

For further information:

Instrument transformers
siemens.com/energy/instrument-transformers

Trench Group
trench-group.com

1
2
3
4
5
6
7
8
9
10
11
12
?

4.2.3 Coil products

With 60 years of successful field experience, Trench is the recognized world leader in the design and manufacturing of air-core dry-type power reactors for all utility and industrial applications. The unique custom design approach, along with fully integrated engineering and manufacturing facilities in North America, Brazil, Europe and China have made Trench the technical leader for high-voltage inductors worldwide.

A deep commitment to the power industry, along with extensive investment in engineering, manufacturing and test capability, give Trench customers the utmost in high-quality, reliable products that are individually designed for each application. Trench reactor applications have grown from small-distribution class, current-limiting reactors to complex EHV-applied reactors surpassing 300 MVA per phase.

Trench Management System is certified in accordance with ISO 9001, ISO 14001 and OHSAS 18001. Trench's highly developed research and development program constantly addresses new technologies and their potential application in reactor products. Trench welcomes challenges for new applications for power reactors.

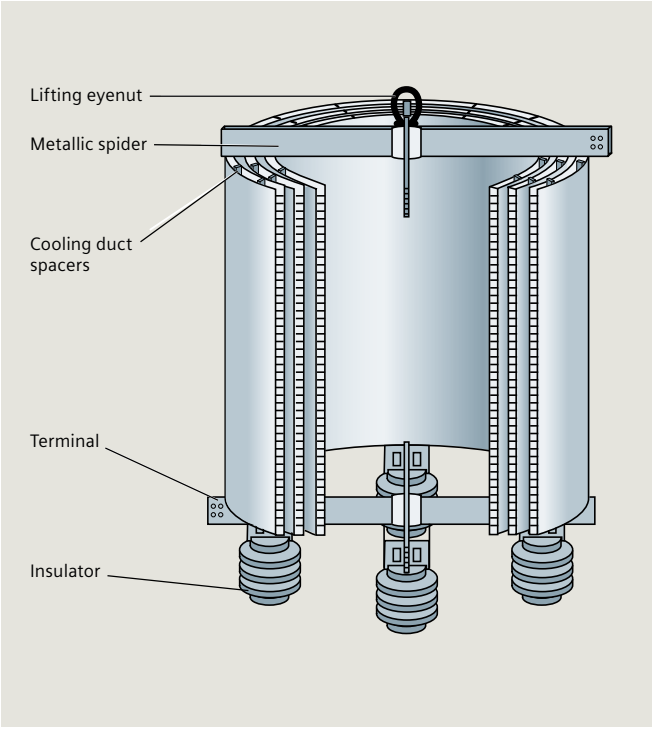

Fig. 4.2-32: Typical Trench air-core dry-type reactor construction

Design features

Design features of air-core dry-type reactors are:

- Epoxy-impregnated, fiberglass-encapsulated construction
- Aluminum construction throughout with all current-carrying connections welded
- Highest mechanical and short-circuit strength
- Essentially zero radial-voltage stress, with uniformly graded axial-voltage distribution between terminals
- Low noise levels are maintained throughout the life of the reactor
- Weatherproof construction, with minimum maintenance requirements
- Design service life in excess of 30 years
- Designs available in compliance with ANSI/IEEE, IEC, and other major standards.

Construction

A Trench air-core dry-type reactor consists of a number of parallel-connected, individually insulated, aluminum (copper on request) conductors (fig. 4.2-32). These conductors can be small wire or proprietary cables which are custom-designed and custom-manufactured. The size and type of conductor used in each reactor is dependent on the reactor specification. The various styles and sizes of conductors available ensure an optimum performance at the most economical cost.

The windings are mechanically reinforced with epoxy-resin-impregnated fiberglass, which after a carefully defined oven-cure cycle produces an encapsulated coil. A network of horizontal and vertical fiberglass ties coupled with the encapsulation minimizes vibration in the reactor and achieves the highest available mechanical strength. The windings are terminated at each end to a set of aluminum bars called a spider. This construction results in a very rigid unit, capable of withstanding the stresses developed under the most severe short-circuit conditions.

Exceptionally high levels of terminal pull, tensile strength, wind loading, and seismic withstand can be accommodated with the reactor. This unique design can be installed in all types of climates and environments, and still offer optimum performance.

Trench air-core dry-type reactors are installed in polluted and corrosive areas, and enable trouble-free operation. In addition to the standard fixed reactance type of coil, units can be supplied with taps for variable inductance. A number of methods are available to vary inductance for fine-tuning, or to provide a range of larger inductance steps.

In addition, Trench utilizes various other designs, e.g., iron-core and water-cooled.

Line traps

Line traps (fig. 4.2-33) are connected in series with HV transmission lines. The main function of the line trap is to provide a high impedance at power-line-carrier frequencies (30-500 kHz) while introducing negligible impedance at the power frequency (50 or 60 Hz). The high impedance limits the attenuation of the carrier signal within the power system by preventing the carrier signal from being:

- Dissipated in the substation
- Grounded in the event of a fault outside the carrier transmission path
- Dissipated in a tap line or a branch of the main transmission path.

Series reactors

Reactors are connected in series with the line or feeder. Typical uses are fault-current reduction, load balancing in parallel circuits, and limiting inrush currents of capacitor banks, etc.

Current-limiting reactors

Current-limiting reactors reduce the short-circuit current to levels within the rating of the equipment on the load side of the reactor (fig. 4.2-34). Applications range from the simple distribution feeder reactor to large bus-tie and load-balancing reactors on systems rated up to 765 kV/2100 kV BIL.

Capacitor reactors

Capacitor reactors are designed to be installed in series with a shunt-connected capacitor bank to limit inrush currents due to switching, to limit outrush currents due to close-in faults, and to control the resonant frequency of the system due to the addition of the capacitor banks. Reactors can be installed on system voltages through 765 kV/2100 kV BIL. When specifying capacitor reactors, the requested continuous current rating should account for harmonic current content, tolerance on capacitors, and allowable system overvoltage.

Buffer reactors for electric arc furnaces

The most effective performance of electric arc furnaces is achieved by operating the furnace at low electrode current and long arc length. This requires the use of a series reactor in the supply system of the arc furnace transformer for stabilizing the arc.

Duplex reactors

Duplex reactors are current-limiting reactors that consist of two half coils, magnetizing against each other. These reactors provide a desirable low reactance under normal conditions, and a high reactance under fault conditions.

Load-flow control reactors

Load-flow control reactors are series-connected on transmission lines of up to 800 kV. The reactors change the line impedance characteristic such that load flow can be controlled, thus ensuring maximum power transfer over adjacent transmission lines.

Fig. 4.2-33: Line traps

Fig. 4.2-34: 3-phase stacked current-limiting reactor

Filter reactors

Filter reactors are used in conjunction with capacitor banks to form tuned harmonic filter circuits, or in conjunction with capacitor banks and resistors to form broadband harmonic filter circuits. When specifying filter reactors, the magnitudes of fundamental and harmonic frequency current should be indicated. If inductance adjustment for fine-tuning is required, the required tapping range and tolerances must be specified. Many filter applications require a Q factor that is much lower than the natural Q of the reactor. This is often achieved by connecting a resistor in the circuit.

An economical alternative is the addition of a de-Q'ing ring structure on a reactor. This can reduce the Q factor of the reactor by as much as one tenth without the need to install additional damping resistors. These rings, mounted on the reactor, are easily coupled to the magnetic field of the reactor. This eliminates the concern of space, connection, and the reliability of additional components such as resistors.

Shunt reactors

Shunt reactors are used to compensate for capacitive VARs generated by lightly loaded transmission lines or underground cables. They are normally connected to the transformer tertiary winding (fig. 4.2-35), but can also be directly connected to systems of up to 345 kV.

Thyristor-controlled shunt reactors (TCR) are extensively used in static VAR systems in which reactive VARs are adjusted by thyristor circuits. Static VAR compensator reactor applications normally include:

- Thyristor-controlled shunt reactors. The compensating power is changed by controlling the current through the reactor by means of the thyristor valves.
- Thyristor-switched capacitor reactors (TSC)
- Filter reactors (FR).

HVDC reactors

HVDC lines are used for long-distance bulk power transmission as well as back-to-back interconnections between different transmission networks. HVDC reactors normally include smoothing reactors, AC and DC harmonic filter reactors, and AC and DC PLC noise filter reactors. In addition, self-commutated HVDC schemes include converter reactors.

Smoothing reactors

Smoothing reactors (fig. 4.2-36) are used to reduce the magnitude of the ripple current in a DC system. They are required on HVDC transmission lines for system voltages of up to 800 kV. They are also used in power electronics applications such as variable-speed drives and UPS systems. Several design and construction techniques are offered by Trench.

Fig. 4.2-35: Tertiary-connected shunt reactors

Fig. 4.2-36: Pole bus smoothing reactor for UHVDC Agra (BIL 1,300 kV; 2,680 A; 75 mH) – tests at HSP Cologne

Test lab reactors

Test lab reactors are installed in high-voltage and high-power test laboratories. Typical applications include current-limiting, synthetic testing of circuit-breakers, inductive energy storage, and artificial lines.

Neutral earthing reactors

Neutral earthing reactors limit the line-to-earth fault current to specified levels. Specification should also include unbalanced condition continuous current and short-circuit current duration.

Arc-suppression coils

Single-phase neutral earthing (grounding) reactors (arc-suppression coils) are intended to compensate for the capacitive line-to-earth current during a 1-phase earth fault. The arc-suppression coil (ASC) represents the central element of the Trench earth-fault protection system (fig. 4.2-37).

Because the electric system is subject to changes, the inductance of the ASC used for neutral earthing must be variable. The earth-fault protection system developed by Trench utilizes the plunger core coil (moveable-core design). Based on extensive experience in design, construction and application of ASCs, Trench products can meet the most stringent requirements for earth-fault compensating techniques.

Variable shunt reactors (VSR)

Variable shunt reactors (fig. 4.2-38) are connected in parallel to the lines, and supply the grid with inductive reactive power where fast control of reactive power is not necessary. VSRs utilize a plunger core technology to provide variation in reactive power.

Functions which can be achieved by a VSR are:
- Maintain steady-state voltage limit condition
- Keep reactive power flow within pre-defined limits
- Maintain a desired power factor.

Typical network conditions which favor the application of variable shunt reactors can be:
- Networks with distributed power generation
- Strongly varying loads connected through long overhead lines or by cables
- Grid connection of remote renewables (e.g., wind power).

Fig. 4.2-37: Arc-suppression coil 110 kV

Fig. 4.2-38: Variable shunt reactor

1
2
3
4
5
6
7
8
9
10
11
12
?

Capacitor filter protection relay (CPR)

CPRs (fig. 4.2-39) are specifically designed to provide comprehensive protection of medium- and high-voltage capacitor banks and filter installations.

The new CPR500 additionally features a capacitive touch user interface, graphical display, and optional IEC 61850 communication multi-language support.
Protection functions are:

- Peak repetitive overvoltage protection to the 50th harmonic
- Overcurrent, undercurrent and earth-fault protection
- Neutral unbalance protection with residual compensation
- Line unbalance protection
- Thermal protection for capacitor, inductor and resistor elements
- Dual breaker fail protection with programmable logic
- Capacitor re-switching protection.

Fig. 4.2-39: Capacitor filter protection relay – CPR500

POWEREN.IR

For further information:
Coils
siemens.com/energy/coils
Trench Group
trench-group.com

4.2.4 Bushings

Introduction

HSP Hochspannungsgeräte GmbH – known as HSP – and Trench have a long history, and are renowned in the manufacturing of high-voltage bushings and equipment. Both are world leaders in power engineering and in the design of specialized electrical products.

As "HSP & Trench Bushing Group", they share their knowledge in the development, design and production of AC and DC bushings up to 1,200 kV. Customers can benefit substantially from their close cooperation in terms of innovation, joint research and development, and common design.

The Bushing Group provides a wide range of bushing products, including bushings for power transformers and HVDC transmission. The portfolio includes resin-impregnated paper bushings (RIP), resin-impregnated synthetic bushings (RIS), oil-impregnated paper bushings (OIP), and SF_6-gas bushings up to 1,200 kV. Whatever the customer's requirements, the Bushing Group has the right bushing for his application (fig. 4.2-40).

Their technologies have been successfully in service for more than 60 years. The Bushing Group operates globally from their production locations in Troisdorf (Germany), St. Louis (France), Shenyang (China), and their sales office in Pickering (Canada).

High-voltage bushings

A bushing is an electrical engineering component that insulates a high-voltage conductor passing through a metal enclosure or a building. Bushings are needed on:

- Transformers
- Buildings
- Gas-insulated switchgear (GIS)
- Generators
- Other high-voltage equipment.

Typical environmental conditions are:

- Oil-to-air
- Oil-to-gas
- Oil-to-oil
- SF_6-to-air
- Air-to-air.

The internal insulation of a bushing is made of a combination of different insulating materials:

- Oil-impregnated paper (OIP)
- Resin-impregnated paper (RIP)
- SF_6 gas.

The external insulation is made up of:

- Resin for indoor applications
- Porcelain or fiberglass tubes with silicone rubber sheds for outdoor application.

Selected state-of-the-art bushing designs are described in the following sections.

Fig. 4.2-40: Power transformer

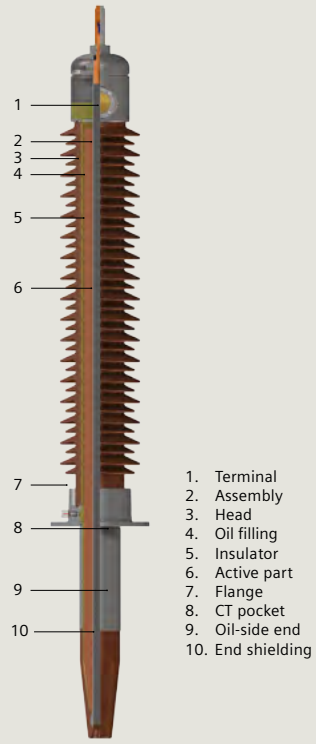

Fig. 4.2-41: Transformer bushing – oil-impregnated paper (OIP) design – sectional view

Transformer bushings:
oil-impregnated paper design (OIP)
An oil-impregnated paper transformer bushing is made up of the following components (fig. 4.2-41):

1. Terminal
Terminal (Al or Cu) for connection of overhead lines or busbars and arcing horns. State-of-the-art designs provide maintenance-free termination, and ensure that the connection does not become loose during operation.

2. Assembly
The whole bushing is secured together by the central tube or conductor.

3. Head
Al-casted head with oil expansion chamber and oil level indicator. The chamber is hermetically sealed against the atmosphere.

4. Oil filling
State-of-the-art bushings are filled with dried, degassed insulating mineral oil.

5. Insulator
Porcelain insulator made of high-grade electrotechnical porcelain in accordance with IEC 815. The insulator is connected to the mounting flange using Portland cement, and sealed with O-ring gasket. Composite insulators are increasingly in demand and are readily available.

6. Active part
The active part comprises oil-impregnated wide-band paper with conductive layers made of aluminum foil to control the electrical field radially and axially. Depending on the current rating, the paper and foil are wound on either a central tube or a solid conductor.

7. Flange
The mounting flange with integrated test tap made of corrosion-free aluminum alloy is machined to ensure an excellent seal between the bushing and the transformer.

8. CT pocket
If current transformers are required on the bushing, the ground sleeve can be extended.

9. Oil-side end
The insulator on the oil side is made of an epoxy-resin tube. It is designed to stay installed during the in-tank drying process of the transformer, and can withstand temperatures of up to 130 °C.

10. End shielding
For voltages starting with 52 kV, a special aluminum electrode is cast into the end of the epoxy-resin tube. This end shielding controls the electrical field strength in this area to earth.

1
2
3
4
5
6
7
8
9
10
11
12
?

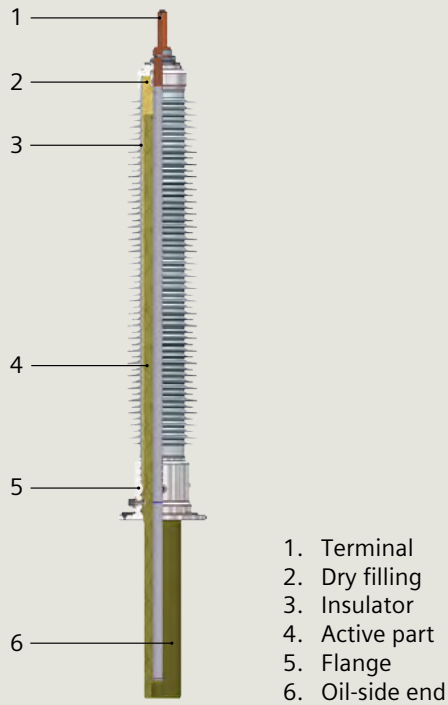

1. Terminal
2. Dry filling
3. Insulator
4. Active part
5. Flange
6. Oil-side end

Fig. 4.2-42: Transformer bushing – resin-impregnated paper (RIP) design – sectional view

Fig. 4.2-43: Transformer bushing – resin-impregnated synthetic (RIS) design

Transformer bushings:
resin-impregnated paper design (RIP) and resin-impregnated synthetic design (RIS)
An resin-impregnated paper and resin-impregnated synthetic transformer bushing is made up of the following components (fig. 4.2-42, fig.4.2-43).

1. Terminal
Terminal (Al or Cu) for connection of overhead lines or busbars and arcing horns. State-of-the-art designs provide maintenance-free termination and ensure that the connection does not become loose in service.

2. Dry filling
State-of-the-art bushings are filled with dry-type foam.

3. Insulator
The external insulation consists of a composite insulator with silicone sheds. These are vulcanized on the mechanical support, a high-quality wound insulating tube made of epoxy resins with glass fiber laminate structure. In most cases, the flange is part of the insulator.

4. Active part
The active part is a capacitive-graded type. It is made of resin-impregnated paper (RIP) or resin-impregnated synthetic (RIS) with coaxially placed conductive layers made of aluminum foil to control the electrical field radially and axially. Depending on the current rating and the connection type, it is wound and impregnated under vacuum on either a central tube or a solid conductor.

5. Flange
The mounting flange with integrated test tap made of corrosion-free aluminum alloy is machined to ensure an excellent seal between the bushing and the transformer.

6. Oil-side end (including CT pocket, if required)
The transformer side of the active part (4) is directly immersed in the transformer oil. No additional housing tube is required. In case evacuation of the transformer is required, there are no restrictions regarding level and time up to the operating temperature of the bushing. The materials RIP and RIS are suitable for such treatment.

Connections
The modular bushing systems offer a large choice of connecting systems. There are three connecting systems available.

Removable cable bolt or removable solid conductor:
At the upper end of the bushing head, there is a clamp through which the conductor or the cable bolt is fixed. A releasable cross-pinned fitting at the clamping device prevents it from slipping into the transformer during operation. It also serves as a locking element. The bolt is sealed through double seals. The clamp is made of stainless steel, and all screws are made of non-corrosive steel. The venting of the central tube is located on one side under the edge of the clamp, and can be operated independently of the conductor bolt. In addition to the cable bolt, solid conductor bolts are available, for example, for higher-current applications. These bolts are centered against the inner wall of the central tube with insulated spacers. Solid conductor bolts can be provided with a separation point, preferably at the flange or to suit any particular case. The bolts are equipped with a threaded hole at the top, so that a draw wire or a rod can be screwed in, and the bolt pulled through the central tube.

Fixed undetacheable conductor bolt: the active part (4) is directly impregnated on the solid conductor. In contrast to standard designs, there is no gap between conductor and central tube. Therefore, no oil from the transformer can access the bushing. The advantage of this design is that it provides a completely oil-free bushing.

Transformer bushings: high current
High-current bushings for transformer-to-phase busbar-isolated connections are designed for 24 kV to 52 kV and for currents from 7,800 A to 31,500 A. Conductors are usually aluminum (or copper on request). The main insulation is vacuum-impregnated epoxy condenser (fig. 4.2-44).

Other transformer bushings: oil-to-gas and oil-to-oil
Oil-to-gas types are used for the direct connection of power transformers to gas-insulated switchgear; oil-to-oil types are designed for direct connections within the power transformer (fig. 4.2-45). Both consist of a main insulating body of RIP (resin-impregnated paper). The condenser core is made of special resin vacuum-impregnated paper incorporating grading foils to ensure uniform voltage distribution. This insulation has proven its reliability over 40 years of service in various system applications. A high-quality insulation enables a compact design. Furthermore, bushings with this insulation have a low partial discharge level, not only at operating voltage, but also above.

Fig. 4.2-44: Transformer bushing – high current

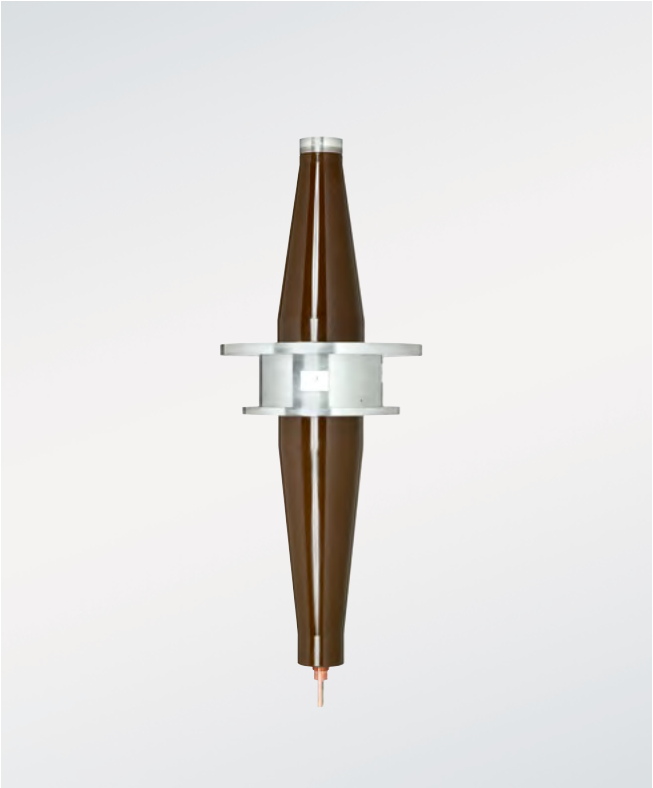

Fig. 4.2-45: Transformer bushing – oil-to-gas

1
2
3
4
5
6
7
8
9
10
11
12
?

HVDC bushings: transformer and wall
The growing demand for HVDC transmission requires reliable and efficient transformer and wall bushings of up to 1,000 kV DC (fig. 4.2-49). RIP solutions are often preferred due to their superior performance in heavily polluted areas, or due to their mechanical strength regarding seismic behavior.

An example of a state-of-the-art solution is the Yunnan-Guangdong/China project (fig. 4.2-46, fig. 4.2-47), which incorporates wall bushings and transformer bushings up to 800 kV.

Wall bushings
Wall bushings (fig. 4.2-48) are designed for use in high-voltage substations for roofs or walls according to their positioning:

- Indoor / indoor bushings for dry indoor conditions
- Outdoor / indoor bushings for use between open air (outer atmosphere) and dry indoor conditions
- Outdoor / outdoor bushings where both ends are in contact with the open air (outer atmosphere).

The main insulating body is capacitive-graded. A number of conductive layers are coaxially located at calculated distances between the central tube and the flange. This leads to a virtual linearization of the axial distribution of voltage on the bushing surface resulting in minimum stress on the surrounding air.

Fig. 4.2-47: Wall bushing – 800 kV HVDC – project Yunnan-Guangdong, China

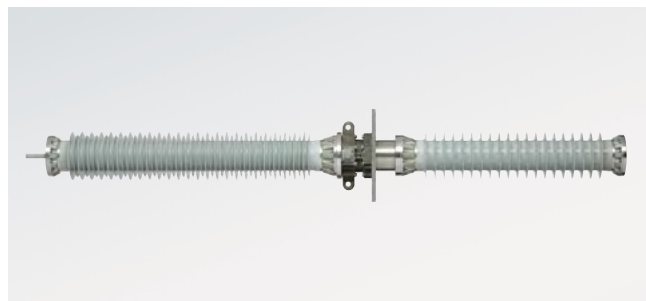

Fig. 4.2-48: Wall bushing – air-to-air

Fig. 4.2-46: Transformer bushing – 800 kV UHVDC – project Yunnan-Guangdong, China

Fig. 4.2-49: Transformer bushing – 500 kV HVDC – project Three Gorges, China

GIS bushings
These bushings are designed for use in GIS substations largely to connect to overhead lines. Designs are either electrode design up to 245 kV, or condenser design above 245 kV (fig. 4.2-50). Composite designs are increasingly in demand, especially for higher voltage ranges and in polluted areas.

Generator bushings
Generator bushings (fig. 4.2-51) are designed for leading the current induced in the stator windings through the pressurized hydrogen-gastight, earthed generator housing. Generator bushings are available from 12 kV to 36 kV and for current ratings of up to 50,000 A. They are natural, gas, or liquid-cooled.

Fig. 4.2-50: GIS bushing – 420 kV SF_6 outdoor bushing with composite housing

Fig. 4.2-51: Generator bushing

For further information:
Bushings
siemens.com/energy/bushings
Trench Group
trench-group.com

4.2.5 Long rod insulators

3FL silicone long rod insulators – performance meets durability

Good reasons to use 3FL
The new Siemens silicone long rod insulators, type 3FL (fig. 4.2-52), combine the highest levels of electrical insulation and mechanical tensile strength with a compact, lightweight design. Thanks to their superior design and minimized weight, 3FL long rod insulators are especially suited for overhead compact-line applications where low tower design and short line spans are required. They are also more economical to transport and install.

Design
The 3FL insulator housing is a one-piece HTV[1] silicone rubber housing made by the one-shot injection molding process. The HTV silicone is directly molded onto the core rod by overlapping the triple junction point and part of the metal end fittings. The design ensures a total enclosure of the most sensitive part of a silicone insulator – the junction zone (metal end fitting / FRP rod / silicone housing), where the highest electrical field strength is usually concentrated. This overlapping system eliminates any need for traditional sealing systems while preventing any moisture ingress attacks (fig. 4.2-53).

Core
The core rod is a boron-free, corrosion-resistant ECR[2] glass-fiber-reinforced plastic rod (FRP rod). Due to the extremely high hydrolysis and acid resistance of the FRP rod, the risk of so-called brittle fracture is completely eliminated for 3FL insulators.

End fittings
The end fittings, made of hot-dip galvanized forged steel or ductile cast iron, are directly attached to the FRP core rod by a circumferential crimping process. Each crimping process is strongly monitored with a special control system. A complete range of end fittings in accordance with the latest IEC and ANSI standards is available up to 210 kN of SML. The 3FL is 100 % exchangeable and compatible with existing insulators and line hardware of all types.

The special design of the end fitting in the junction minimizes the electrical field strength and partial discharge inside the junction zone as well as on the silicone housing surface, by utilizing an integrated grading ring. This reliably prevents corrosion of the insulating material and eliminates the risk of subsequent failure of the insulator.

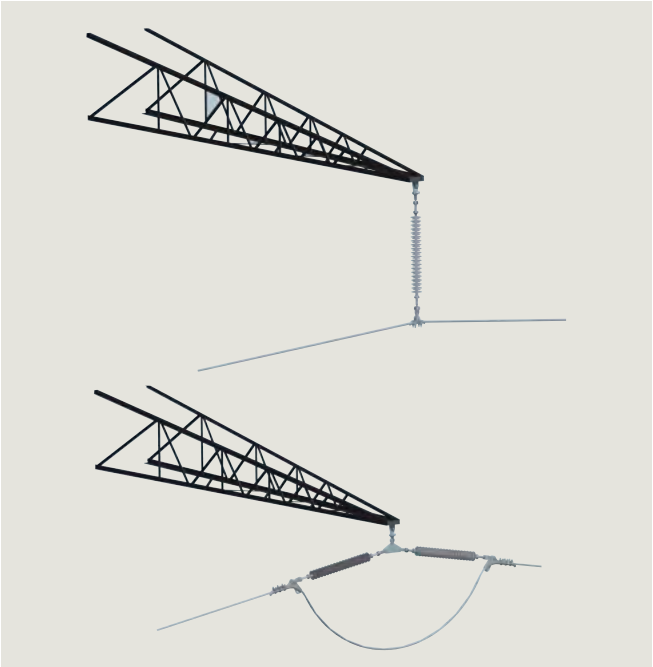

Fig. 4.2-52: 3FL long rod insulators can be used either as suspension or tension insulators

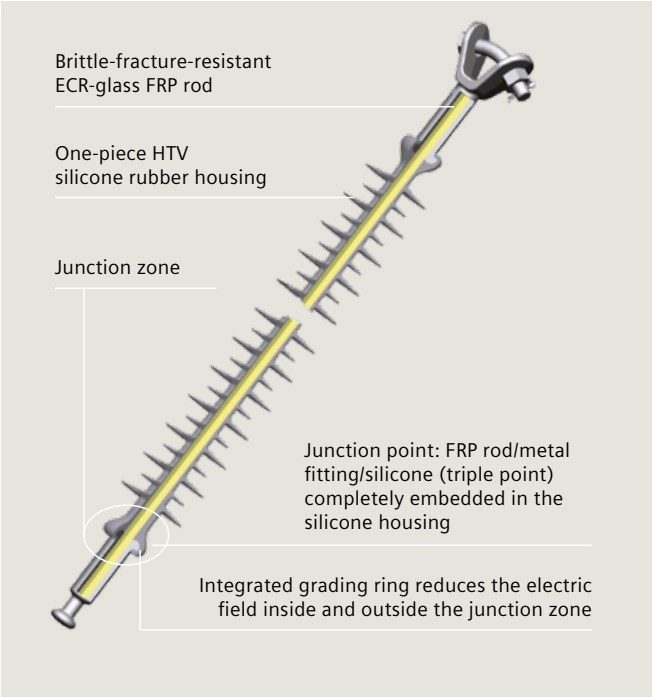

Fig. 4.2-53: 3FL – a superior design to meet the highest requirements

[1] *HTV: High-temperature vulcanizing*
[2] *ECR glass: Electrical- and corrosion-resistant glass*

1
2
3
4
5
6
7
8
9
10
11
12

3FL – HTV silicone rubber housing for best pollution performances (fig. 4.2-54)
The excellent pollution layer characteristics of the HTV silicone rubber ensure maximum reliability of the 3FL insulator, even under extreme operational conditions. The high hydrophobic housing prevents the formation of conductive film on its surface. Even the most severe ambient conditions, such as salt fog in coastal regions or dust-laden air in industrial areas, cannot impair the intrinsic hydrophobicity of the HTV silicone rubber. Surface currents and discharges are ruled out. Neither water nor dirt on the housing surface can cause insulator flashovers – a significant factor for insulator performance.

Quality from Siemens
Thanks to a long-established Siemens tradition and experience in high-voltage equipment, spanning more than a century, each production step for the 3FL – beginning with numerous incoming raw material inspections through to the assembly of the individual components and routine tests of the finished product – is rigorously monitored and strictly controlled.

Maximized service life

No moisture ingress
The one-piece housing of the 3FL insulators, i.e., weathersheds and core rod sheath (coating) is one-piece and has only one internal interface throughout the whole insulator, namely the boundary interface between the housing and the FRP core rod. This design eliminates all internal interfaces between weathersheds and the core rod coating. These kinds of longitudinal interfaces are normally very sensitive to tangential electrical field stress, which in worst-case scenarios can easily lead to erosion damage of the polymer interfaces. In particular, they can lead to erosion of the bonding between sheds and rod sheath, and thus damage the insulator housing.

Furthermore, the junction point in the connection zone, where all three elements (FRP rod, metal end fitting, and silicone housing) meet, is absolutely water- and air-tight sealed during manufacturing by the use of an overmolding housing system. It completely encloses this junction point with the HTV silicone rubber of the housing itself. The highest bonding strength of the one-piece HTV silicone housing to the FRP core rod, combined with the overmolding design system, prevent moisture ingress at the connection zone of the insulator (fig. 4.2-55).

Fig. 4.2-54: HTV silicone rubber for best pollution performances

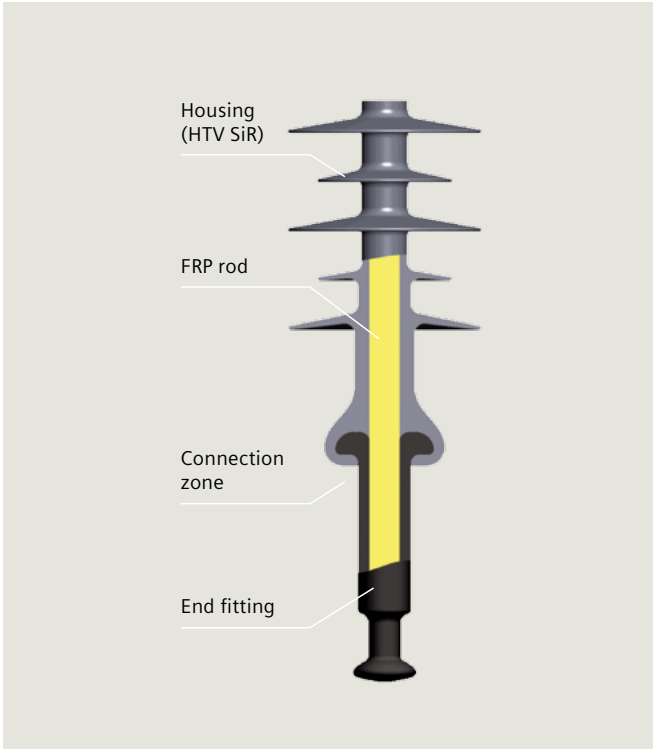

Fig. 4.2-55: 3FL cross section

1
2
3
4
5
6
7
8
9
10
11
12
?

Minimized electrical field strength

Following numerous electrical calculations regarding E-field distribution along the insulator and the connection zone on the high-voltage side in particular, the design of the 3FL insulator was optimized for maximum reduction of electrical field stress, reduced corona effect, and minimized RIV value. Two design factors ensure improved life expectancy by reducing electrical field stress in the triple point and on the silicone surface:

- The spherical-shaped rim of the end fitting inside the housing homogenizes the E-field distribution on the high-voltage side of the 3FL insulator with an integrated grading ring up to 170 kV (fig. 4.2-56).
- The overmolded design system and the silicone housing shape at the connection zone reduce the electrical field strength inside the housing, particularly at the inner triple point as well as on the silicone surface directly. This is achieved by displacing the higher electrical field strength outside the housing (i.e., to the surrounding air area), and by taking advantage of the higher silicone relative permittivity (fig. 4.2-57).

3FL insulators can therefore be applied on 170 kV systems without the need for additional grading/corona rings.

Standards and tests

All 3FL long rod insulators are designed and tested in compliance with the latest IEC standards.

Each Siemens 3FL insulator that leaves the factory is routinely tested with a corresponding mechanical tensile test load of at least 50 % of the defined SML load for at least ten seconds.

Product standards	
IEC 61109	Insulators for overhead lines – composite suspension and tension insulators for a.c. systems with a nominal voltage greater than 1,000 V
IEC 62217	Polymeric insulators for indoor and outdoor use with a nominal voltage >1,000 V
IEC 60815	Selection and dimensioning of high-voltage insulators intended for use in polluted conditions
IEC 61466-1, -2	Composite string insulator units for overhead lines with a nominal voltage greater than 1,000 V

Table 4.2-12: Product standards

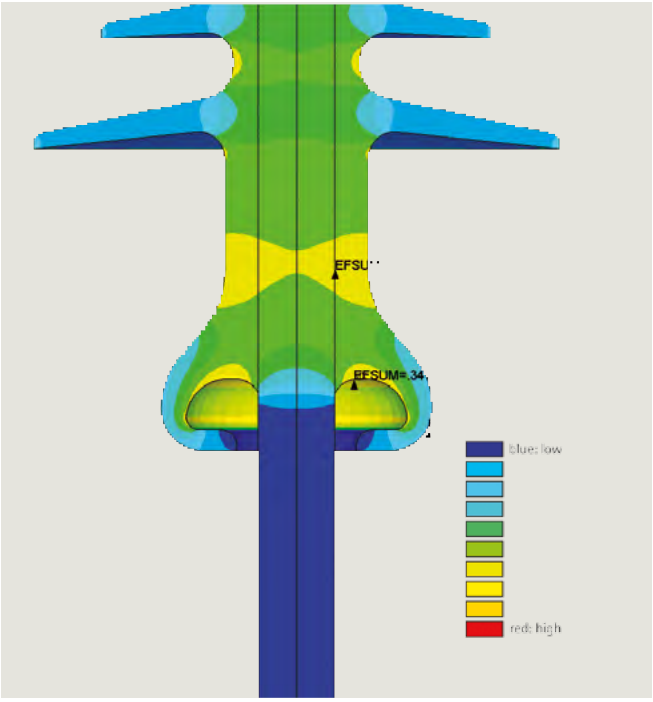

Fig. 4.2-56: E-field distribution (%/mm) in silicone housing and in FRP core rod at 3FL insulator high-voltage end

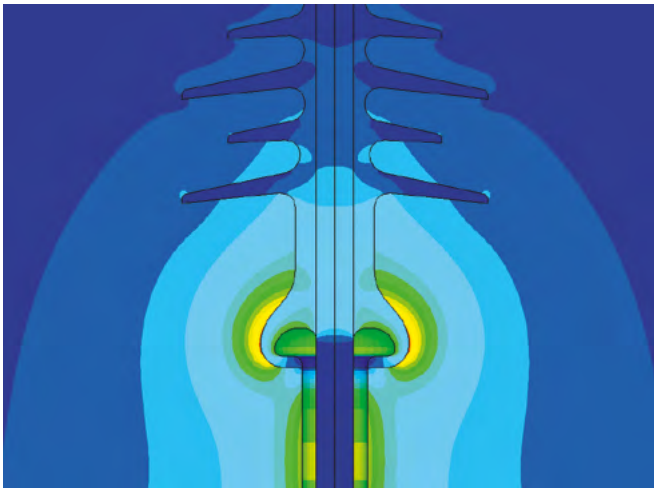

Fig. 4.2-57: E-field distribution (%/mm) at 3FL insulator high-voltage end

For further information:
Long rod insulators
siemens.com/energy/insulators

1
2
3
4
5
6
7
8
9
10
11
12
?

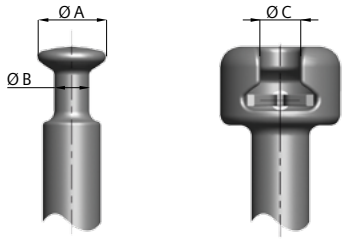

Socket and ball acc. to IEC 60120				
Designation	SML	Dimensions in mm		
		A	B	C
16	70 kN / 100 kN / 120 kN	33	17	19
20	160 kN / 210 kN	41	21	23

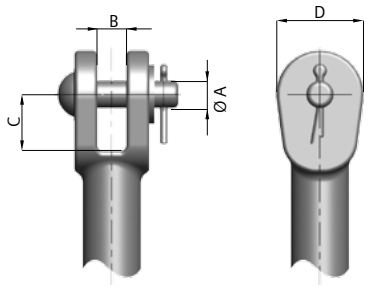

Clevis acc. to IEC 60471 and IEC 61466-1					
Designation	SML	Dimensions in mm			
		A	B	C	D
13L	70 kN	13	14	17	42
16L	100 / 120 kN	16	18	32	46
16N	100 / 120 kN	16	18	32	46
19L	160 kN	19	20	37	56
19N	160 kN	19	22.5	26	56
22L	210 kN	22	20	43	60
22N	210 kN	22	26	30	60

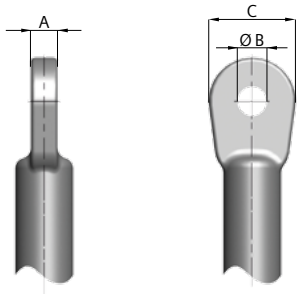

Tongue acc. to IEC 60471 and IEC 61466-1				
Designation	SML	Dimensions in mm		
		A	B	C
13L	70 kN	13	14	42
16L	100 kN / 120 kN	16	17.5	46
16N	100 kN / 120 kN	12.7	17.5	46
19L	160 kN	19	20	56
19N	160 kN	19	20.6	46
22L	210 kN	19	24	60
22N	210 kN	22	23.8	52

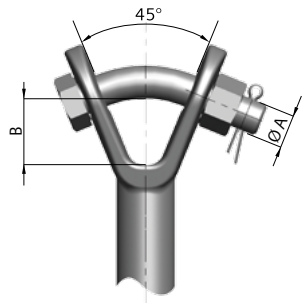

Y-clevis acc. to IEC 61466-1			
Designation	SML	Dimensions in mm	
		A	B
16	70 kN	16	32
19	100 / 120 kN	19	34
22	160 / 210 kN	22	41

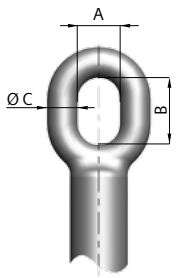

Eye acc. to IEC 61466-1				
Designation	SML	Dimensions in mm		
		A	B	C
17	70 kN	20	32	15
24	100 kN / 120 kN	24	48	19
25	160 kN / 210 kN	25	50	22
30	160 kN / 210 kN	30	60	25

Arcing horns

Corona ring

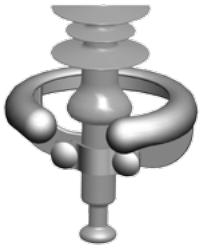

Recommended corona rings (diameter in mm) by line voltage		
Line voltage (kV)	Ground end (top end fitting)	Line end (conductor end fitting)
≤ 170 kV	None	None
245 kV	None	Ø 210
300 kV	None	Ø 330
362 kV	None	Ø 330
420 kV	Ø 210	Ø 330
550 kV	Ø 210	Ø 420

Accessories

Arc protection devices such as arcing horns and corona rings for reduction of electrical field stress and corona effect are carefully designed based on numerous electrical simulations regarding electrical field distribution. For system voltages above 170 kV, corona rings are included in the 3FL insulator application as a standard feature. Customer-specific solutions and other connection and cable clamps are also available on request.

Maximum values		units	3FL2	3FL3	3FL4	3FL5	3FL6
Highest voltage for equipment, U_m	from	kV	12	72.5	72.5	72.5	72.5
	to	kV	72.5	550	550	550	550
Nominal system voltage, U_n	from	kV	10	60	60	60	60
	to	kV	69	500	500	500	500
Specified mechanical load, SML class	–	kN	70	100	120	160	210
Maximum section length, length increments 52 mm (with socket and ball)	from	mm	332	821	821	871	871
	to	mm	782	6,125	6,125	6,125	6,125

Long Rod Insulators Type 3FL2, SML 70 kN

3FL2 long rod insulators are designed to meet the highest requirements in distribution power systems up to 72 kV. They have high lightning impulse, power-frequency withstand voltages, and a long creepage class (> 31 mm/kV). 3FL2 insulators are available with mechanical ratings up to SML = 70 kN.

End fittings with SML = 70 kN		
Designation as per standard	Standard	Connection length
Name/size		V, mm
Ball 16	IEC 60120	75
Socket 16A	IEC 60120	79
Clevis 13L	IEC 60471	87
Tongue 13L	IEC 60741	87
Y-clevis 16	IEC 61466-1	94
Eye 17	IEC 61466-1	93

Technical data 3FL2									
Highest voltage for equipment	Typical nominal system voltages	Lightning impulse withstand voltage (1.2/50 µs, dry)	Power-frequency withstand voltage (50 Hz, 1min., wet)	Arcing distance	Creepage distance	Housing length	Section length* (with socket and ball)	Catalog number	Weight (with socket and ball)
U_m, kV	U_n, kV	LIWL $_{min}$, kV	PFWL $_{min}$, kV	S, mm	C, mm	H, mm	L, mm		W, kg
12.0	10, 11, 12	158	73	214	426	178	331	3FL2 018-4SB11-1XX1	1.6
24.0	15, 20, 22, 24	216	89	300	805	268	421	3FL2 027-4SB11-1XX1	2.0
36.0	30, 33, 35, 36	243	111	390	1,184	358	511	3FL2 036-4SB11-1XX1	2.4
72.5	60, 66, 69, 72	400	200	660	2,321	628	781	3FL2 063-4SB11-1XX1	3.6

*Reference value of the section length of an insulator for version with socket and ball end fittings of size 16 in accordance with IEC 60120. To obtain the section length of an insulator equipped with other end fittings, the housing length and connection lengths (see table "End fittings") of both end fittings must be added together.

Long Rod Insulators 3FL3 and 3FL4

3FL silicone long rod insulators for suspension and tension applications are available in lengths suitable for 60 kV through 550 kV. Length increments are 52 mm. A few selected insulator lengths are listed in the following table. Intermediate, shorter, or longer lengths are available on request.

		3FL3	3FL4
Specified mechanical load	SML:	100 kN	120 kN
Routine test load	RTL:	50 kN	60 kN

Technical data 3FL3 and 3FL4

Highest voltage for equipment based on 25 mm/kV	Lightning impulse withstand voltage (1.2/50 µs, dry)	Switching impulse withstand voltage (250/ 2,500 µs, positive, wet)	Power-frequency withstand voltage (50 Hz, 1 min, wet)	Arcing distance	Standard creepage distance catalog code: 3	Extra-high creepage distance catalog code: 4	Nominal housing length	Section length* with socket and ball	Catalog code	Grading ring diameter top/ bottom (earth / HV side)	Appprox. net weight for standard creepage distance
U_m kV	LIWV kV	SIWV min kV	PFWV kV	S mm	C mm	C mm	H mm	L mm	3FL_[1]-___[2]_[3]_[4]_[5]21-1_[6]_[7]1	D mm	W kg
<72.5	449	–	160	644	1,706	2,291	614	821	3FLx - 061-3SB11-1XX1	x / x	3.2
72.5	476	–	180	696	1,868	2,516	666	873	3FLx - 067-3SB11-1XX1	x / x	3.3
72.5	503	–	200	748	2,031	2,740	718	925	3FLx - 072-3SB11-1XX1	x / x	3.4
72.5	530	–	220	800	2,194	2,964	770	977	3FLx - 077-3SB11-1XX1	x / x	3.5
72.5	556	–	240	852	2,356	3,189	822	1,029	3FLx - 082-3SB11-1XX1	x / x	3.6
72.5	583	–	260	904	2,519	3,413	874	1,081	3FLx - 087-3SB11-1XX1	x / x	3.7
72.5	610	–	280	956	2,681	3,637	926	1,133	3FLx - 093-3SB11-1XX1	x / x	3.8
72.5	637	–	300	1,008	2,844	3,862	978	1,185	3FLx - 098-3SB11-1XX1	x / x	3.9
72.5	664	–	320	1,060	3,007	4,086	1,030	1,237	3FLx - 103-3SB11-1XX1	x / x	4.0
123	690	–	340	1,112	3,169	4,310	1,082	1,289	3FLx - 108-3SB11-1XX1	x / x	4.1
123	717	–	360	1,164	3,332	4,535	1,134	1,341	3FLx - 113-3SB11-1XX1	x / x	4.2
123	744	–	380	1,216	3,494	4,759	1,186	1,393	3FLx - 119-3SB11-1XX1	x / x	4.3
145	771	–	400	1,268	3,657	4,983	1,238	1,445	3FLx - 124-3SB11-1XX1	x / x	4.4
145	797	–	420	1,320	3,820	5,208	1,290	1,497	3FLx - 129-3SB11-1XX1	x / x	4.5
145	824	–	440	1,372	3,982	5,432	1,342	1,549	3FLx - 134-3SB11-1XX1	x / x	4.6
145	851	–	460	1,424	4,145	5,656	1,394	1,601	3FLx - 139-3SB11-1XX1	x / x	4.7
170	882	–	469	1,476	4,307	5,881	1,446	1,653	3FLx - 145-3SB11-1XX1	x / x	4.8
170	913	–	478	1,528	4,470	6,105	1,498	1,705	3FLx - 150-3SB11-1XX1	x / x	4.9
170	943	–	488	1,580	4,633	6,329	1,550	1,757	3FLx - 155-3SB11-1XX1	x / x	5.0
170	974	–	497	1,632	4,795	6,554	1,602	1,809	3FLx - 160-3SB11-1XX1	x / x	5.1
170	1,005	–	506	1,684	4,958	6,778	1,654	1,861	3FLx - 165-3SB11-1XX1	x / x	5.2
170	1,036	–	515	1,736	5,120	7,002	1,706	1,913	3FLx - 171-3SB11-1XX1	x / x	5.3
170	1,066	–	525	1,788	5,283	7,227	1,758	1,965	3FLx - 176-3SB11-1XX1	x / x	5.4
170	1,097	–	534	1,840	5,446	7,451	1,810	2,017	3FLx - 181-3SB11-1XX1	x / x	5.5
170	1,128	–	543	1,892	5,608	7,675	1,862	2,069	3FLx - 186-3SB11-1XX1	x / x	5.6
170	1,159	–	552	1,944	5,771	7,900	1,914	2,121	3FLx - 191-3SB11-1XX1	x / x	5.7
170	1,189	–	562	1,996	5,933	8,124	1,966	2,173	3FLx - 197-3SB11-1XX1	x / x	5.8
245	1,220	–	571	2,003	6,096	8,348	2,018	2,225	3FLx - 202-3SB11-1XS1	x / Ø210	6.8
245	1,251	–	580	2,055	6,259	8,573	2,070	2,277	3FLx - 207-3SB11-1XS1	x / Ø210	6.9
245	1,282	–	586	2,107	6,421	8,797	2,122	2,329	3FLx - 212-3SB11-1XS1	x / Ø210	7.0
245	1,313	–	593	2,159	6,584	9,021	2,174	2,381	3FLx - 217-3SB11-1XS1	x / Ø210	7.1
245	1,344	–	599	2,211	6,747	9,246	2,226	2,433	3FLx - 223-3SB11-1XS1	x / Ø210	7.2
245	1,375	–	605	2,263	6,909	9,470	2,278	2,485	3FLx - 228-3SB11-1XS1	x / Ø210	7.3
245	1,406	–	612	2,315	7,072	9,694	2,330	2,537	3FLx - 233-3SB11-1XS1	x / Ø210	7.4
245	1,437	–	618	2,367	7,234	9,919	2,382	2,589	3FLx - 238-3SB11-1XS1	x / Ø210	7.5
245	1,468	1,032	625	2,419	7,397	10,143	2,434	2,641	3FLx - 243-3SB11-1XS1	x / Ø210	8.4
300	1,499	1,042	631	2,456	7,560	10,367	2,486	2,693	3FLx - 249-3SB11-1XM1	x / Ø330	8.5
300	1,530	1,052	637	2,508	7,722	10,592	2,538	2,745	3FLx - 254-3SB11-1XM1	x / Ø330	8.6
300	1,561	1,062	644	2,560	7,885	10,816	2,590	2,797	3FLx - 259-3SB11-1XM1	x / Ø330	8.7
300	1,623	1,081	656	2,664	8,210	11,265	2,694	2,901	3FLx - 269-3SB11-1XM1	x / Ø330	8.9
300	1,654	1,091	663	2,716	8,373	11,489	2,746	2,953	3FLx - 275-3SB11-1XM1	x / Ø330	9.0
300	1,716	1,111	676	2,820	8,698	11,938	2,850	3,057	3FLx - 285-3SB11-1XM1	x / Ø330	9.2
362	1,778	1,130	688	2,924	9,023	12,386	2,954	3,161	3FLx - 295-3SB11-1XM1	x / Ø330	9.4
362	1,809	1,140	695	2,976	9,186	12,611	3,006	3,213	3FLx - 301-3SB11-1XM1	x / Ø330	9.5
362	1,840	1,150	701	3,028	9,348	12,835	3,058	3,265	3FLx - 306-3SB11-1XM1	x / Ø330	9.6
362	1,873	1,170	709	3,132	9,673	13,284	3,162	3,369	3FLx - 316-3SB11-1XM1	x / Ø330	9.8

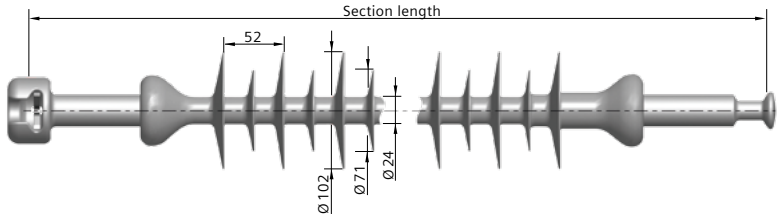

[1] Specified mechanical load (SML): use "3" for 100 kN; use "4" for 120 kN.
[2] Nominal housing length in mm/10. [3] Standard creepage distance: "3"; Extra-high creepage distance: "4".
[4] Upper end fitting (earth side) [5] Bottom end fitting (high-voltage side)
[6] Upper corona ring (earth side) [7] Bottom corona ring (high-voltage side).
For all insulator types having no pre-installed corona rings and indicated by the code "X" optional corona rings can be added, if requested. For this, use the smallest corona ring available, i.e., catalog code "S"; please refer to page 10 for further catalog numbering information.

Technical data 3FL3 and 3FL4

Highest voltage for equipment based on 25 mm/kV	Lightning impulse withstand voltage (1.2/ 50 µs, dry)	Switching impulse withstand voltage (250/ 2500 µs, positive, wet)	Power-frequency withstand voltage (50 Hz, 1 min., wet)	Arcing distance	Standard creepage distance catalog code: 3	Extra-high creepage distance catalog code: 4	Nominal housing length	Section length* with socket and ball	Catalog code	Grading ring diameter top/bottom (earth / HV side)	Approx. net weight for standard creepage distance
U_m kV	LIWV kV	SIWV min kV	PFWV kV	S mm	C mm	C mm	H mm	L mm	3FL_[1]-___[2]_[3]_[4]_[5]21-1_[6]_[7]1	D mm	W kg
362	1,889	1,179	713	3,184	9,836	13,508	3,214	3,421	3FLx - 321-3SB11-1XM1	x / Ø330	9.9
362	1,922	1,199	720	3,288	10,161	13,957	3,318	3,525	3FLx - 332-3SB11-1XM1	x / Ø330	10.1
362	1,939	1,209	724	3,340	10,324	14,181	3,370	3,577	3FLx - 337-3SB11-1XM1	x / Ø330	10.2
420	1,971	1,229	732	3,399	10,649	14,629	3,474	3,681	3FLx - 347-3SB11-1SM1	Ø210 / Ø330	11.3
420	2,004	1,248	740	3,503	10,974	15,078	3,578	3,785	3FLx - 358-3SB11-1SM1	Ø210 / Ø330	11.5
420	2,037	1,268	748	3,607	11,300	15,527	3,682	3,889	3FLx - 368-3SB11-1SM1	Ø210 / Ø330	11.7
420	2,054	1,278	752	3,659	11,462	15,751	3,734	3,941	3FLx - 373-3SB11-1SM1	Ø210 / Ø330	11.8
420	2,070	1,288	756	3,711	11,625	15,975	3,786	3,993	3FLx - 379-3SB11-1SM1	Ø210 / Ø330	11.9
420	2,103	1,307	763	3,815	11,950	16,424	3,890	4,097	3FLx - 389-3SB11-1SM1	Ø210 / Ø330	12.1
420	2,136	1,327	771	3,919	12,275	16,873	3,994	4,201	3FLx - 399-3SB11-1SM1	Ø210 / Ø330	12.3
420	2,169	1,346	779	4,023	12,600	17,321	4,098	4,305	3FLx - 410-3SB11-1SM1	Ø210 / Ø330	12.5
420	2,185	1,356	783	4,075	12,763	17,546	4,150	4,357	3FLx - 415-3SB11-1SM1	Ø210 / Ø330	12.6
420	2,201	1,366	787	4,127	12,926	17,770	4,202	4,409	3FLx - 420-3SB11-1SM1	Ø210 / Ø330	12.7
420	2,218	1,376	791	4,179	13,088	17,994	4,254	4,461	3FLx - 425-3SB11-1SM1	Ø210 / Ø330	12.8
420	2,251	1,396	798	4,283	13,413	18,443	4,358	4,565	3FLx - 436-3SB11-1SM1	Ø210 / Ø330	13.0
550	2,284	1,415	806	4,362	13,739	18,892	4,462	4,669	3FLx - 446-3SB11-1SL1	Ø210 / Ø420	14.8
550	2,300	1,425	810	4,466	14,064	19,340	4,566	4,773	3FLx - 457-3SB11-1SL1	Ø210 / Ø420	15.0
550	2,300	1,425	810	4,674	14,714	20,238	4,774	4,981	3FLx - 477-3SB11-1SL1	Ø210 / Ø420	15.4
550	2,300	1,425	810	4,778	15,040	20,686	4,878	5,085	3FLx - 488-3SB11-1SL1	Ø210 / Ø420	15.6
550	2,300	1,425	810	4,882	15,365	21,135	4,982	5,189	3FLx - 498-3SB11-1SL1	Ø210 / Ø420	15.8
550	2,300	1,425	810	4,986	15,690	21,584	5,086	5,293	3FLx - 509-3SB11-1SL1	Ø210 / Ø420	16.0
550	2,300	1,425	810	5,090	16,015	22,032	5,190	5,397	3FLx - 519-3SB11-1SL1	Ø210 / Ø420	16.2
550	2,300	1,425	810	5,194	16,340	22,481	5,294	5,501	3FLx - 529-3SB11-1SL1	Ø210 / Ø420	16.4
	2,300	1,425	810	5,350	16,828	23,154	5,450	5,657	3FLx - 545-3SB11-1SL1	Ø210 / Ø420	16.7
	2,300	1,425	810	5,454	17,153	23,603	5,554	5,761	3FLx - 555-3SB11-1SL1	Ø210 / Ø420	16.9
	2,300	1,425	810	5,558	17,479	24,051	5,658	5,865	3FLx - 566-3SB11-1SL1	Ø210 / Ø420	17.1
	2,300	1,425	810	5,662	17,804	24,500	5,762	5,969	3FLx - 576-3SB11-1SL1	Ø210 / Ø420	17.4
	2,300	1,425	810	5,818	18,292	25,173	5,918	6,125	3FLx - 592-3SB11-1SL1	Ø210 / Ø420	17.7

End fittings types and standards

Type	Standard	Catalog code	Length V
Ball 16	IEC 60120	B	108 mm
Socket 16A	IEC 60120	S	99 mm
Socket 16B	IEC 60120	R	103 mm
Clevis 16L	IEC 60471	C	119 mm
Tongue 16L	IEC 60741	T	118 mm
Y-clevis 19	IEC 61466-1	Y	127 mm
Eye 24	IEC 61466-1	E	128 mm

Section length adjustment table* for other end fittings combinations, Base end fittings: socket and ball (catalog code: SB)

Upper end fitting (earth side)	Bottom end fitting (high-voltage side)	Catalog code	Length change, mm
Clevis 16L	Tongue 16L	CT	+30
Clevis 16L	Clevis 16L	CC	+31
Clevis 16L	Eye 24	CE	+40
Clevis 16L	Ball 16	CB	+20
Tongue 16L	Tongue 16L	TT	+29
Eye 24	Ball 16	EB	+29
Eye 24	Eye 24	EE	+49
Y-clevis 19	Eye 24	YE	+48
Y-clevis 19	Ball 16	YB	+28

* To determine the section length of an insulator with a different end fitting combination than socket and ball, please add the appropriate adjustment section length shown in the table above. For all other configurations not shown in this table, contact your Siemens representative.

Long Rod Insulators 3FL5 and 3FL6

3FL silicone long rod insulators for suspension and tension applications are available in lengths appropriate for 60 kV through 550 kV. Length increments are 52 mm. A few selected insulator lengths are listed in the following table. Intermediate, shorter or longer lengths available on request.

		3FL5	3FL6
Specified mechanical load	SML:	160 kN	210 kN
Routine test load	RTL:	80 kN	105 kN

Technical data 3FL5 and 3FL6

Highest voltage for equipment based on 25 mm/kV	Lightning impulse withstand voltage (1.2/50 µs, dry)	Switching impulse withstand voltage (250/ 2,500 µs, positive, wet)	Power-frequency withstand voltage (50 Hz, 1 min, wet)	Arcing distance	Standard creepage distance catalog code: 3	Extra-high creepage distance catalog code: 4	Nominal housing length	Section length* with socket and ball	Catalog code	Grading ring diameter top/ bottom (earth / HV side)	Approx. net weight for standard creepage distance
U_m kV	LIWV kV	SIWV min kV	PFWV kV	S mm	C mm	C mm	H mm	L mm	3FL_1-___2-_3_4_5 21-1_6_7 1	D mm	W kg
<72.5	449	–	160	643	1,702	2,288	614	878	3FLx - 061-3SB21-1XX1	x / x	5.2
72.5	476	–	180	695	1,865	2,512	666	930	3FLx - 067-3SB21-1XX1	x / x	5.3
72.5	503	–	200	747	2,027	2,736	718	982	3FLx - 072-3SB21-1XX1	x / x	5.4
72.5	530	–	220	799	2,190	2,961	770	1,034	3FLx - 077-3SB21-1XX1	x / x	5.6
72.5	556	–	240	851	2,352	3,185	822	1,086	3FLx - 082-3SB21-1XX1	x / x	5.7
72.5	583	–	260	903	2,515	3,409	874	1,138	3FLx - 087-3SB21-1XX1	x / x	5.9
72.5	610	–	280	955	2,678	3,634	926	1,190	3FLx - 093-3SB21-1XX1	x / x	6.0
72.5	637	–	300	1,007	2,840	3,858	978	1,242	3FLx - 098-3SB21-1XX1	x / x	6.1
123	664	–	320	1,059	3,003	4,082	1,030	1,294	3FLx - 103-3SB21-1XX1	x / x	6.3
123	690	–	340	1,111	3,166	4,307	1,082	1,346	3FLx - 108-3SB21-1XX1	x / x	6.4
123	717	–	360	1,163	3,328	4,531	1,134	1,398	3FLx - 113-3SB21-1XX1	x / x	6.5
123	744	–	380	1,215	3,491	4,755	1,186	1,450	3FLx - 119-3SB21-1XX1	x / x	6.7
145	771	–	400	1,267	3,653	4,980	1,238	1,502	3FLx - 124-3SB21-1XX1	x / x	6.8
145	797	–	420	1,319	3,816	5,204	1,290	1,554	3FLx - 129-3SB21-1XX1	x / x	6.9
145	824	–	440	1,371	3,979	5,428	1,342	1,606	3FLx - 134-3SB21-1XX1	x / x	7.1
145	851	–	460	1,423	4,141	5,652	1,394	1,658	3FLx - 139-3SB21-1XX1	x / x	7.2
170	882	–	469	1,475	4,304	5,877	1,446	1,710	3FLx - 145-3SB21-1XX1	x / x	7.3
170	913	–	478	1,527	4,466	6,101	1,498	1,762	3FLx - 150-3SB21-1XX1	x / x	7.5
170	943	–	488	1,579	4,629	6,325	1,550	1,814	3FLx - 155-3SB21-1XX1	x / x	7.6
170	974	–	497	1,631	4,792	6,550	1,602	1,866	3FLx - 160-3SB21-1XX1	x / x	7.7
170	1,005	–	506	1,683	4,954	6,774	1,654	1,918	3FLx - 165-3SB21-1XX1	x / x	7.9
170	1,036	–	515	1,735	5,117	6,998	1,706	1,970	3FLx - 171-3SB21-1XX1	x / x	8.0
170	1,066	–	525	1,787	5,279	7,223	1,758	2,022	3FLx - 176-3SB21-1XX1	x / x	8.1
170	1,097	–	534	1,839	5,442	7,447	1,810	2,074	3FLx - 181-3SB21-1XX1	x / x	8.3
170	1,128	–	543	1,891	5,605	7,671	1,862	2,126	3FLx - 186-3SB21-1XX1	x / x	8.4
170	1,159	–	552	1,943	5,767	7,896	1,914	2,178	3FLx - 191-3SB21-1XX1	x / x	8.5
170	1,189	–	562	1,995	5,930	8,120	1,966	2,230	3FLx - 197-3SB21-1XX1	x / x	8.7
245	1,220	–	571	2,002	6,092	8,344	2,018	2,282	3FLx - 202-3SB21-1XS1	x / Ø210	9.7
245	1,251	–	580	2,054	6,255	8,569	2,070	2,334	3FLx - 207-3SB21-1XS1	x / Ø210	9.8
245	1,282	–	586	2,106	6,418	8,793	2,122	2,386	3FLx - 212-3SB21-1XS1	x / Ø210	10.0
245	1,313	–	593	2,158	6,580	9,017	2,174	2,438	3FLx - 217-3SB21-1XS1	x / Ø210	10.1
245	1,344	–	599	2,210	6,743	9,242	2,226	2,490	3FLx - 223-3SB21-1XS1	x / Ø210	10.2
245	1,375	–	605	2,262	6,906	9,466	2,278	2,542	3FLx - 228-3SB21-1XS1	x / Ø210	10.4
245	1,406	–	612	2,314	7,068	9,690	2,330	2,594	3FLx - 233-3SB21-1XS1	x / Ø210	10.5
245	1,437	–	618	2,366	7,231	9,915	2,382	2,646	3FLx - 238-3SB21-1XS1	x / Ø210	10.6
245	1,468	1,032	625	2,403	7,393	10,139	2,434	2,698	3FLx - 243-3SB21-1XM1	x / Ø210	11.5
300	1,499	1,042	631	2,455	7,556	10,363	2,486	2,750	3FLx - 249-3SB21-1XM1	x / Ø330	11.7
300	1,530	1,052	637	2,507	7,719	10,588	2,538	2,802	3FLx - 254-3SB21-1XM1	x / Ø330	11.8
300	1,561	1,062	644	2,559	7,881	10,812	2,590	2,854	3FLx - 259-3SB21-1XM1	x / Ø330	11.9
300	1,623	1,081	656	2,663	8,206	11,261	2,694	2,958	3FLx - 269-3SB21-1XM1	x / Ø330	12.2
300	1,654	1,091	663	2,715	8,369	11,485	2,746	3,010	3FLx - 275-3SB21-1XM1	x / Ø330	12.3
300	1,716	1,111	676	2,819	8,694	11,934	2,850	3,114	3FLx - 285-3SB21-1XM1	x / Ø330	12.6
362	1,778	1,130	688	2,923	9,019	12,382	2,954	3,218	3FLx - 295-3SB21-1XM1	x / Ø330	12.9
362	1,809	1,140	695	2,975	9,182	12,607	3,006	3,270	3FLx - 301-3SB21-1XM1	x / Ø330	13.0
362	1,840	1,150	701	3,027	9,345	12,831	3,058	3,322	3FLx - 306-3SB21-1XM1	x / Ø330	13.1
362	1,873	1,170	709	3,131	9,670	13,280	3,162	3,426	3FLx - 316-3SB21-1XM1	x / Ø330	13.4

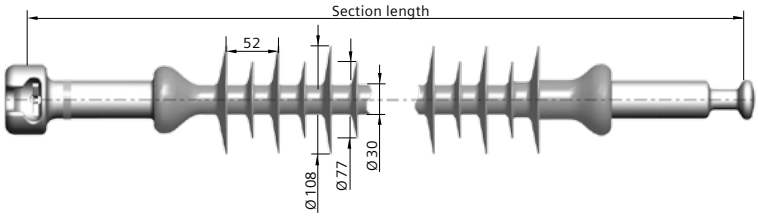

[1] Specified mechanical load (SML): use "3" for 100 kN; use "4" for 120 kN.
[2] Nominal housing length in mm/10. [3] Standard creepage distance: "3"; Extra-high creepage distance: "4".
[4] Upper end fitting (earth side) [5] Bottom end fitting (high-voltage side)
[6] Upper corona ring (earth side) [7] Bottom corona ring (high-voltage side).
For all insulator types having no preinstalled corona rings and indicated by the code "X" optional corona rings can be added, if requested. For this, use the smallest corona ring available, i.e. catalog code "S", please refer to page 10 for further catalog numbering information.

Technical data 3FL5 and 3FL6

Highest voltage for equipment based on 25 mm/kV	Lightning impulse withstand voltage (1.2/ 50 µs, dry)	Switching impulse withstand voltage (250/ 2500 µs, positive, wet)	Power-frequency withstand voltage (50 Hz, 1 min., wet)	Arcing distance	Standard creepage distance catalog code: 3	Extra-high creepage distance catalog code: 4	Nominal housing length	Section length* with socket and ball	Catalog code	Grading ring diameter top/bottom (earth / HV side)	Approx. net weight for standard creepage distance
U_m kV	LIWV kV	SIWV min kV	PFWV kV	S mm	C mm	C mm	H mm	L mm	3FL_[1]-___[2]-_[3]_[4]_[5]21-1_[6]_[7]1	D mm	W kg
362	1,889	1,179	713	3,183	9,832	13,504	3,214	3,478	3FLx - 321-3SB21-1XM1	x / Ø330	13.6
362	1,922	1,199	720	3,287	10,158	13,953	3,318	3,582	3FLx - 332-3SB21-1XM1	x / Ø330	13.8
362	1,939	1,209	724	3,339	10,320	14,177	3,370	3,634	3FLx - 337-3SB21-1XM1	x / Ø330	14.0
420	1,971	1,229	732	3,398	10,645	14,625	3,474	3,738	3FLx - 347-3SB21-1SM1	Ø210 / Ø330	15.1
420	2,004	1,248	740	3,502	10,971	15,074	3,578	3,842	3FLx - 358-3SB21-1SM1	Ø210 / Ø330	15.4
420	2,037	1,268	748	3,606	11,296	15,523	3,682	3,946	3FLx - 368-3SB21-1SM1	Ø210 / Ø330	15.6
420	2,054	1,278	752	3,658	11,459	15,747	3,734	3,998	3FLx - 373-3SB21-1SM1	Ø210 / Ø330	15.8
420	2,070	1,288	756	3,710	11621	15,971	3,786	4,050	3FLx - 379-3SB21-1SM1	Ø210 / Ø330	15.9
420	2,103	1,307	763	3,814	11,946	16,420	3,890	4,154	3FLx - 389-3SB21-1SM1	Ø210 / Ø330	16.2
420	2,136	1,327	771	3,918	12,272	16,869	3,994	4,258	3FLx - 399-3SB21-1SM1	Ø210 / Ø330	16.5
420	2,169	1,346	779	4,022	12,597	17,317	4,098	4,362	3FLx - 410-3SB21-1SM1	Ø210 / Ø330	16.7
420	2,185	1,356	783	4,074	12,759	17,542	4,150	4,414	3FLx - 415-3SB21-1SM1	Ø210 / Ø330	16.9
420	2,201	1,366	787	4,126	12,922	17,766	4,202	4,466	3FLx - 420-3SB21-1SM1	Ø210 / Ø330	17.0
420	2,218	1,376	791	4,178	13,085	17,990	4,254	4,518	3FLx - 425-3SB21-1SM1	Ø210 / Ø330	17.1
420	2,251	1,396	798	4,282	13,410	18,439	4,358	4,622	3FLx - 436-3SB21-1SM1	Ø210 / Ø330	17.4
550	2,284	1,415	806	4,361	13,735	18,888	4,462	4,726	3FLx - 446-3SB21-1SL1	Ø210 / Ø420	19.2
550	2,300	1,425	810	4,465	14,060	19,336	4,566	4,830	3FLx - 457-3SB21-1SL1	Ø210 / Ø420	19.5
550	2,300	1,425	810	4,673	14,711	20,234	4,774	5,038	3FLx - 477-3SB21-1SL1	Ø210 / Ø420	20.0
550	2,300	1,425	810	4,777	15,036	20,682	4,878	5,142	3FLx - 488-3SB21-1SL1	Ø210 / Ø420	20.3
550	2,300	1,425	810	4,881	15,361	21,131	4,982	5,246	3FLx - 498-3SB21-1SL1	Ø210 / Ø420	20.6
550	2,300	1,425	810	4,985	15,686	21,580	5,086	5,350	3FLx - 509-3SB21-1SL1	Ø210 / Ø420	20.8
550	2,300	1,425	810	5,089	16,012	22,028	5,190	5,454	3FLx - 519-3SB21-1SL1	Ø210 / Ø420	21.1
550	2,300	1,425	810	5,193	16,337	22,477	5,294	5,558	3FLx - 529-3SB21-1SL1	Ø210 / Ø420	21.4
	2,300	1,425	810	5,349	16,825	23,150	5,450	5,714	3FLx - 545-3SB21-1SL1	Ø210 / Ø420	21.8
	2,300	1,425	810	5,453	17,150	23,598	5,554	5,818	3FLx - 555-3SB21-1SL1	Ø210 / Ø420	22.1
	2,300	1,425	810	5,557	17,475	24,047	5,658	5,922	3FLx - 566-3SB21-1SL1	Ø210 / Ø420	22.3
	2,300	1,425	810	5,661	17,800	24,496	5,762	6,026	3FLx - 576-3SB21-1SL1	Ø210 / Ø420	22.6
	2,300	1,425	810	5,817	18,288	25,169	5,918	6,182	3FLx - 592-3SB21-1SL1	Ø210 / Ø420	23.0

End fittings types and standards

Type	Standard	Catalog code	Length V
Ball 20	IEC 60120	B	135 mm
Socket 20	IEC 60120	S	129 mm
Clevis 19L	IEC 60471	C	145 mm
Clevis 22L	IEC 60471	C	154 mm
Tongue 19L	IEC 60741	T	144 mm
Tongue 22L	IEC 60741	T	153 mm
Y-clevis 22	IEC 61466-1	Y	156 mm
Eye 25	IEC 61466-1	E	153 mm

Section length adjustment table* for other end fittings combinations, Base end fittings: socket and ball (catalog code: SB)

Upper end fitting (earth side)	Bottom end fitting (high-voltage side)	Catalog code	Length change, mm
Clevis 19L	Tongue 19L	CT	+25
Clevis 19L	Clevis 19L	CC	+26
Clevis 19L	Eye 25	CE	+34
Clevis 19L	Ball 20	CB	+16
Tongue 19L	Tongue 19L	TT	+24
Eye 25	Ball 20	EB	+24
Eye 25	Eye 25	EE	+42
Y-clevis 22	Eye 25	YE	+45
Y-clevis 22	Ball 20	YB	+27

* To determine the section length of an insulator with a different end fitting combination than socket and ball, please add the appropriate adjustment section length shown in the table above. For all other configurations not shown in this table, contact your Siemens representative.

4.3 Medium-voltage switching devices

4.3.1 Indoor devices

Overview of vacuum switching components

Medium-voltage equipment is available in power plants (in generators and station supply systems) and in transformer substations (of public systems or large industrial plants) of the primary distribution level. Transformer substations receive power from the high-voltage system and transform it down to the medium-voltage level. Medium-voltage equipment is also available in secondary transformer or transfer substations (secondary distribution level), where the power is transformed down from medium to low voltage and distributed to the end consumer.

The product line of the medium-voltage switching devices contains (fig. 4.3-1):

- Circuit-breakers
- Switches
- Contactors
- Disconnectors
- Switch-disconnectors
- Earthing switches.

Requirements

In CLOSED condition, the switching device has to offer minimum resistance to the flow of normal and short-circuit currents. In OPEN condition, the open contact gap must withstand the appearing voltages safely. All live parts must be sufficiently isolated to earth and between phases when the switching device is open or closed.

The switching device must be able to close the circuit if voltage is applied. For disconnectors, however, this condition is only requested for the de-energized state, except for small load currents.

The switching device should be able to open the circuit while current is flowing. This is not requested for disconnectors. The switching device should produce switching overvoltages as low as possible.

Circuit-breakers

Circuit-breakers must make and break all currents within the scope of their ratings, from small inductive and capacitive load currents up to the short-circuit current, and this must occur under all fault conditions in the power supply system, including earth faults and phase opposition. Outdoor circuit-breakers have the same applications, but are also exposed to weather influences.

Switches

Switches must make and break normal currents up to their rated normal current, and be able to make on existing short circuits (up to their rated short-circuit making current). However, they cannot break any short-circuit currents.

Contactors

Contactors are load breaking devices with a limited making and breaking capacity. They are used for high switching rates but can neither make nor break short-circuit currents.

Switch-disconnectors

A switch-disconnector is to be understood as the combination of a switch and a disconnector, or a switch with isolating distance.

Fig. 4.3-1: Product line of medium-voltage switching devices

Selection of components by ratings

The switching devices and all other equipment must be selected for the system data available at the place of installation. This system data defines the ratings of the components (table 4.3-1).

Rated insulation level

The rated insulation level is the dielectric strength from phase to earth, between phases and across the open contact gap, or across the isolating distance.

The dielectric strength is the capability of an electrical component to withstand all voltages with a specific time sequence up to the magnitude of the corresponding withstand voltages. These can be operating voltages or higher-frequency voltages caused by switching operations, earth faults (internal overvoltages) or lightning strikes (external overvoltages). The dielectric strength is verified by a lightning impulse withstand voltage test with the standard impulse wave of 1.2/50 µs and a power-frequency withstand voltage test (50 Hz/1 min).

Rated voltage

The rated voltage is the upper limit of the highest system voltage the device is designed for. Because all high-voltage switching devices are zero-current interrupters – except for some fuses – the system voltage is the most important dimensioning criterion. It determines the dielectric stress of the switching device by means of the transient recovery voltage and the recovery voltage, especially while switching off.

Rated normal current

The rated normal current is the current that the main circuit of a device can continuously carry under defined conditions. The heating of components – especially of contacts – must not exceed defined values. Permissible temperature rises always refer to the ambient air temperature. If a device is mounted in an enclosure, it is possible that it may not be loaded with its full rated current, depending on the quality of heat dissipation.

Rated peak withstand current

The rated peak withstand current is the peak value of the first major loop of the short-circuit current during a compensation process after the beginning of the current flow that the device can carry in closed state. It is a measure for the electrodynamic (mechanical) load of an electrical component. For devices with full making capacity, this value is not relevant (see the paragraph "Rated short-circuit making current" later in this section).

Rated breaking current

The rated breaking current is the load breaking current in normal operation. For devices with full breaking capacity and without a critical current range, this value is not relevant (see the paragraph "Rated short-circuit breaking current" later in this section).

Rated short-circuit breaking current

The rated short-circuit breaking current is the root-mean-square value of the breaking current in the event of short circuit at the terminals of the switching device.

Rated short-circuit making current

The rated short-circuit making current is the peak value of the making current in the event of short circuit at the terminals of the switching device. This stress is greater than that of the rated peak withstand current, because dynamic forces may work against the contact movement.

Standards

The switching devices, and also non-switching components, are subject to national and international standards.

Component designation	Rated insulation level	Rated voltage	Rated normal current	Rated peak withstand current	Rated breaking current	Rated short-circuit breaking current	Rated short-circuit making current
Switching devices							
Circuit-breaker	■	■	■	–	–	■	■
Switch	■	■	■	–	■	■ 1)	■
Switch-disconnector	■	■	■	–	■	–	■
Make-proof earthing switch	■	■	–	–	–	–	■
Contactor	■	■	■	–	■	■ 1)	■ 1)

■ Influence on selection of component – No influence on selection of component 1) Limited short-circuit making capacity

Table 4.3-1: Table of switching devices according to ratings

Vacuum circuit-breakers

Siemens medium-voltage vacuum circuit-breakers are available with rated voltages up to 36 kV and rated short-circuit breaking currents up to 72 kA (table 4.3-2). They are used:

- For universal installation in all customary medium-voltage switchgear types
- As 1-pole or multi-pole medium-voltage circuit-breakers for all switching duties in indoor switchgear
- For breaking resistive, inductive and capacitive currents
- For switching generators
- For switching contact lines (1-pole traction circuit-breakers).

Switching duties

The switching duties of the circuit-breaker depend partly upon its type of operating mechanism:

- Stored-energy mechanism
- For synchronizing and rapid load transfer
- For auto-reclosing
- Spring-operated mechanism (spring CLOSED, stored-energy OPEN) for normal closing and opening.

Switching duties in detail

Synchronizing
The closing times during synchronizing are so short that, when the contacts touch, there is still sufficient synchronism between the systems to be connected in parallel.

Rapid load transfer
The transfer of consumers to another incoming feeder without interrupting operation is called rapid load transfer. Vacuum circuit-breakers with stored-energy mechanisms feature the very short closing and opening times required for this purpose. Beside other tests, vacuum circuit-breakers for rapid load transfer have been tested with the operating sequence O-3 min-CO-3 min-CO at full rated short-circuit breaking current according to the standards. They even control the operating sequence O-0.3 s-CO-3 min-CO up to a rated short-circuit breaking current of 31.5 kA.

Auto-reclosing
This is required in overhead lines to clear transient faults or short circuits that could be caused by, for example, thunderstorms, strong winds or animals. Even at full short-circuit current, the vacuum circuit-breakers for this switching duty leave such short dead times between closing and opening that the de-energized time interval is hardly noticeable to the power supply to the consumers. In the event of unsuccessful auto-reclosing, the faulty feeder is shut down definitively. For vacuum circuit-breakers with the auto-reclosing feature, the operating sequence O-0.3 s-CO-3 min-CO must be complied with according to IEC 62 271-100, whereas an unsuccessful auto-reclosing only requires the operating sequence O-0.3 s-CO.

Auto-reclosing in traction line systems
To check the traction line system via test resistors for the absence of short circuits after a short-circuit shutdown, the operating sequence is O-15 s-CO.

Multiple-shot reclosing
Vacuum circuit-breakers are also suitable for multiple-shot reclosing, which is mainly applicable in English-speaking countries. The operating sequence O-0.3 s-CO-15 s-CO-15 s-CO is required.

Switching of transformers
In the vacuum circuit-breaker, the chopping current is only 2 to 3 A due to the special contact material used, which means that no hazardous overvoltages will appear when unloaded transformers are switched off.

Breaking of short-circuit currents
While breaking short-circuit currents at the fault location directly downstream from transformers, generators or current-limiting reactors, the full short-circuit current can appear first; second, the initial rate of rise of the transient recovery voltage can be far above the values according to IEC 62 271-100. There may be initial rates of rise up to 10 kV/s, and while switching off short-circuits downstream from reactors, these may be even higher. The circuit-breakers are also adequate for this stress.

Switching of capacitors
Vacuum circuit-breakers are specifically designed for switching capacitive circuits. They can switch off capacitors up to the maximum battery capacities without restrikes, and thus without overvoltages. Capacitive current breaking is generally tested up to 400 A. These values are technically conditioned by the testing laboratory. Operational experience has shown that capacitive currents are generally controlled up to 70 % of the rated normal current of the circuit-breaker. When capacitors are connected in parallel, currents up to the short-circuit current can appear, which may be hazardous for parts of the system due to their high rate of rise. Making currents up to 20 kA (peak value) are permissible; higher values are can be achieved if specifically requested.

Switching of overhead lines and cables
When unloaded overhead lines and cables are switched off, the relatively small capacitive currents are controlled without restrikes, and thus without overvoltages.

Switching of motors
When small high-voltage motors are stopped during start-up, switching overvoltages may arise. This concerns high-voltage motors with starting currents up to 600 A. The magnitude of these overvoltages can be reduced to harmless values by means of special surge limiters. For individually compensated motors, no protective circuit is required.

Switching of generators
The switching of generators is the “premium class” for the circuit-breaker: Here, the maximum normal and – in case of fault – short-circuit currents with the correspondingly high thermal and mechanical stresses arise.

Switching of filter circuits
When filter circuits or inductor-capacitor banks are switched off, the stress for the vacuum circuit-breaker caused by the recovery voltage is higher than when switching capacitors. This is due to the series connection of the inductor and the capacitor, and must be taken into account for the rated voltage when the vacuum circuit-breaker is selected.

Switching of arc furnaces
While circuit-breakers for standard applications are only rarely switched during the year, arc furnaces require up to 100 operating cycles a day. The 3AH4 vacuum circuit-breaker is especially adequate for this purpose. In this application, the load currents can be asymmetrical and distorted. To avoid resonance oscillations in the furnace transformers, individually adjusted protective circuits are necessary.

1 2 3 4 5 6 7 8 9 10 11 12 ?

Rated short-circuit breaking current	Rated normal current	Rated voltage and frequency								
		7.2 kV		12 kV			15 kV	17.5 kV		
kA	A	50/60 Hz		50/60 Hz			50/60 Hz	50/60 Hz		
12.5	800							SION 3AE		
	1250							SION 3AE		
13.1	800				3AH5					
16	800	SION 3AE		SION 3AE	3AH5			SION 3AE		
	1250	SION 3AE		SION 3AE	3AH5			SION 3AE		
	1600	SION 3AE		SION 3AE				SION 3AE		
	2000							SION 3AE		
20	800	SION 3AE		SION 3AE	3AH5					
	1250	SION 3AE		SION 3AE	3AH5					
	1600	SION 3AE		SION 3AE						
	2000				3AH5					
	2500									
25	800	SION 3AE		SION 3AE	3AH5			SION 3AE	3AH5	
	1250	SION 3AE		SION 3AE	3AH5			SION 3AE	3AH5	
	1600	SION 3AE		SION 3AE				SION 3AE		
	2000	SION 3AE		SION 3AE	3AH5			SION 3AE		
	2500			SION 3AE	3AH5			SION 3AE	3AH5	
31.5	800	SION 3AE		SION 3AE				SION 3AE		
	1250	SION 3AE		SION 3AE	3AH5	3AH4	3AH4	SION 3AE	3AH5	3AH4
	1600	SION 3AE		SION 3AE						
	2000	SION 3AE		SION 3AE	3AH5	3AH4	3AH4	SION 3AE	3AH5	3AH4
	2500	SION 3AE		SION 3AE	3AH5			SION 3AE	3AH5	
	3150			SION 3AE						
	4000			SION 3AE [1) 2)]						
40	1250	SION 3AE	3AK7	SION 3AE	3AK7	3AH4	3AH4	SION 3AE	3AK7	3AH4
	1600					3AH4	3AH4			3AH4
	2000	SION 3AE	3AK7	SION 3AE	3AK7	3AH4	3AH4	SION 3AE	3AK7	3AH4
	2500	SION 3AE	3AK7	SION 3AE	3AK7	3AH4	3AH4	SION 3AE	3AK7	3AH4
	3150	SION 3AE	3AK7	SION 3AE	3AK7	3AH4	3AH4	SION 3AE	3AK7	3AH4
	4000		3AK7 [1)]	SION 3AE [1) 2)]	3AK7 [1)]				3AK7 [1)]	
50	1250	3AH3	3AK7/3AK7	3AH3/SION 3AE [2)]	3AK7/3AK7		3AH3	3AH3	3AK7/3AK7	
	1600			SION 3AE [2)]						
	2000	3AH3	3AK7/3AK7	3AH3/SION 3AE [2)]	3AK7/3AK7		3AH3	3AH3	3AK7/3AK7	
	2500	3AH3	3AK7/3AK7	3AH3/SION 3AE [2)]	3AK7/3AK7		3AH3	3AH3	3AK7/3AK7	
	3150	3AH3	3AK7/3AK7	3AH3/SION 3AE [2)]	3AK7/3AK7		3AH3	3AH3	3AK7/3AK7	3AH38
	4000	3AH3	3AK7/3AK7 [1)]	3AH3/SION 3AE [1) 2)]	3AK7/3AK7 [1)]		3AH3	3AH3	3AK7/3AK7 [1)]	3AH38
	5000									3AH37
	6300									3AH37
	8000									3AH37 [1)]
63	1250	3AH3		3AH3			3AH3	3AH3		
	2000	3AH3		3AH3			3AH3	3AH3		
	2500	3AH3		3AH3			3AH3	3AH3		
	3150	3AH3		3AH3			3AH3	3AH3		3AH38
	4000	3AH3		3AH3			3AH3	3AH3		3AH38
	5000									3AH37
	6300									3AH37
	8000									3AH37 [1)]
72	3150	3AH3		3AH3			3AH3	3AH3		3AH38
	4000	3AH3		3AH3			3AH3	3AH3		3AH38
	5000									3AH37
	6300									3AH37
	8000									3AH37 [1)]

Circuit-breaker acc. to IEC 62271 and local standards, if appl. Generator circuit-breaker acc. to IEC/IEEE 62271-37-013 1) With forced cooling 2) For China GB/DL only

Table 4.3-2: Portfolio of vacuum circuit-breakers (part 1)

Rated short-circuit breaking current	Rated normal current	Rated voltage and frequency							Traction applications		
		24 kV			36 kV		40.5 kV		17.5 kV*	25 kV*	27.5 kV*
kA	A	50/60 Hz			50/60 Hz		50/60 Hz		16.7 Hz	25 Hz	50/60 Hz
12.5	800	SION 3AE									
	1250	SION 3AE									
13.1	800										
16	800	SION 3AE	3AH5								
	1250	SION 3AE	3AH5		3AH5						
	1600										
	2000	SION 3AE									
20	800	SION 3AE									
	1250	SION 3AE	3AH5								
	1600										
	2000	SION 3AE	3AH5								
	2500	SION 3AE	3AH5								
25	800	SION 3AE									
	1250	SION 3AE	3AH5	3AH4	3AH5		SION 3AE [2]			3AH47	3AH47
	1600						SION 3AE [2]				
	2000	SION 3AE		3AH4	3AH5		SION 3AE [2]		3AH47	3AH47	3AH47
	2500	SION 3AE	3AH5				SION 3AE [2]			3AH47	3AH47
31.5	800										
	1250	SION 3AE [2]			3AH3	3AH4	3AH3 / SION 3AE [2]	3AH4		3AH47	3AH47
	1600						SION 3AE [2]				
	2000				3AH3	3AH4	3AH3 / SION 3AE [2]	3AH4	3AH47	3AH47	3AH47
	2500				3AH3	3AH4	3AH3 / SION 3AE [2]	3AH4		3AH47	3AH47
	3150	SION 3AE [2]			3AH3	3AH4	3AH3	3AH4			
	4000				3AH3	3AH4	3AH3	3AH4			
40	1250	3AH3									
	1600										
	2000	3AH3									
	2500	3AH3		3AH4	3AH3	3AH4	3AH3	3AH4	3AH47		
	3150	3AH3		3AH4	3AH3	3AH4	3AH3	3AH4			
	4000				3AH3	3AH4	3AH3	3AH4			
50	1250	3AH3									
	2000	3AH3									
	2500	3AH3							3AH47		
	3150	3AH3	3AH37								
	4000	3AH3	3AH37								
	5000		3AH37								
	6300		3AH37								
	8000		3AH37 [1]								
63	3150		3AH37								
	4000		3AH37								
	5000		3AH37								
	6300		3AH37								
	8000		3AH37 [1]								
72	3150		3AH37								
	4000		3AH37								
	5000		3AH37								
	6300		3AH37								
	8000		3AH37 [1]								

Circuit-breaker acc. to IEC 62271 and local standards, if appl. Generator circuit-breaker acc. to IEC/IEEE 62271-37-013
1) With forced cooling 2) For China GB / DL only

* Phase-to-earth voltage for traction applications

Table 4.3-2: Portfolio of vacuum circuit-breakers (part 2)

1
2
3
4
5
6
7
8
9
10
11
12
?

Portfolio of circuit-breakers		
SION	The standard circuit-breaker for variable application: ■ Available as standard circuit-breaker or complete slide-in module ■ Up to 30,000 operating cycles ■ Retrofit solution possible ■ With air-insulated and embedded poles	
3AH5	The standard circuit-breaker for small switching capacities: ■ Up to 10,000 operating cycles	
3AH3	The circuit-breaker for high switching capacities: ■ Rated short-circuit breaking currents of up to 63 kA ■ Rated normal currents of up to 4,000 A ■ Up to 10,000 operating cycles	
3AH4	The circuit-breaker for a high number of operating cycles, i.e., for arc furnace switching: ■ Up to 120,000 operating cycles ■ Rated normal currents of up to 4,000 A ■ Rated short-circuit breaking currents of up to 40 kA	
3AH37 / 3AH38	The circuit-breaker for high-current and generator applications ■ Rated short-circuit breaking currents of up to 72 kA (according to IEC/IEEE 62271-37-013) ■ Rated normal currents up to 6,300 A ■ Up to 10,000 operating cycles ■ Design for phase segregation up to 24 kV, 80 kA, 12,000 A up to 24 kV, 90 kA, 6,300 A	
3AH47	The circuit-breaker for applications in traction systems ■ System frequency 16⅔, 25, 50 or 60 Hz ■ 1-pole or 2-pole ■ Up to 60,000 operating cycles	
3AK7	The compact, small circuit-breaker for high-current and generator applications ■ Rated short-circuit breaking currents of up to 50 kA ■ For generator switching according to IEC/IEEE 62271-37-013 Rated short-circuit breaking currents of up to 50 kA ■ Rated normal currents up to 4,000 A	

Table 4.3-3: Different types of vacuum circuit-breakers

1
2
3
4
5
6
7
8
9
10
11
12
?

Vacuum circuit-breaker for generator switching applications

Application

For more than 40 years, Siemens has been constantly developing and improving high-current and generator circuit-breakers, which are able to withstand increasingly higher currents. More than 2,500 generator circuit-breakers from Siemens are used worldwide by multiple power supply and industrial companies in the most different types of power plants. Based on the vacuum technology, a compact generator circuit-breaker is available, which combines the advantages of vacuum technology in respect of unequaled reliability, long service life, and environmental friendliness in a single device. Siemens has optimized its vacuum circuit-breakers particularly for generator switching applications with high thermal and mechanical stresses.

Type tests as specified in IEC 62271-100 are performed as a rule for all Siemens circuit-breakers. The 3AH37 / 38 generator circuit-breakers are additionally tested according to IEC / IEEE 62271-37-013. This standard is the only worldwide standard to take into account the increased requirements to which the equipment is subjected when switching generators, such as higher TRV rates of rise, higher test voltage levels, extremely high DC components, and the missing current zeros resulting thereof. Thus, these circuit-breakers are appropriate for power plant application with power ratings of up to 500 MVA. The following table (fig. 4.3-3) offers an overview of the available designs.

Generator circuit-breaker 3AH37 in classical three-pole design	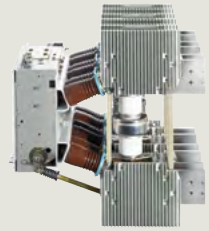
Generator circuit-breaker module 3AH36 in single-pole design for applications with segregated phases	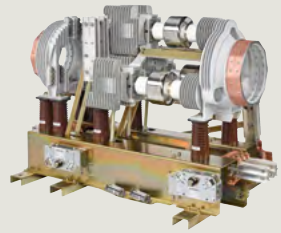
The 3AH36 generator circuit-breaker module is used, for example, in the single-phase enclosed generator switchgear type HB3 from Siemens	

Fig. 4.3-3: Design of vacuum generator breakers

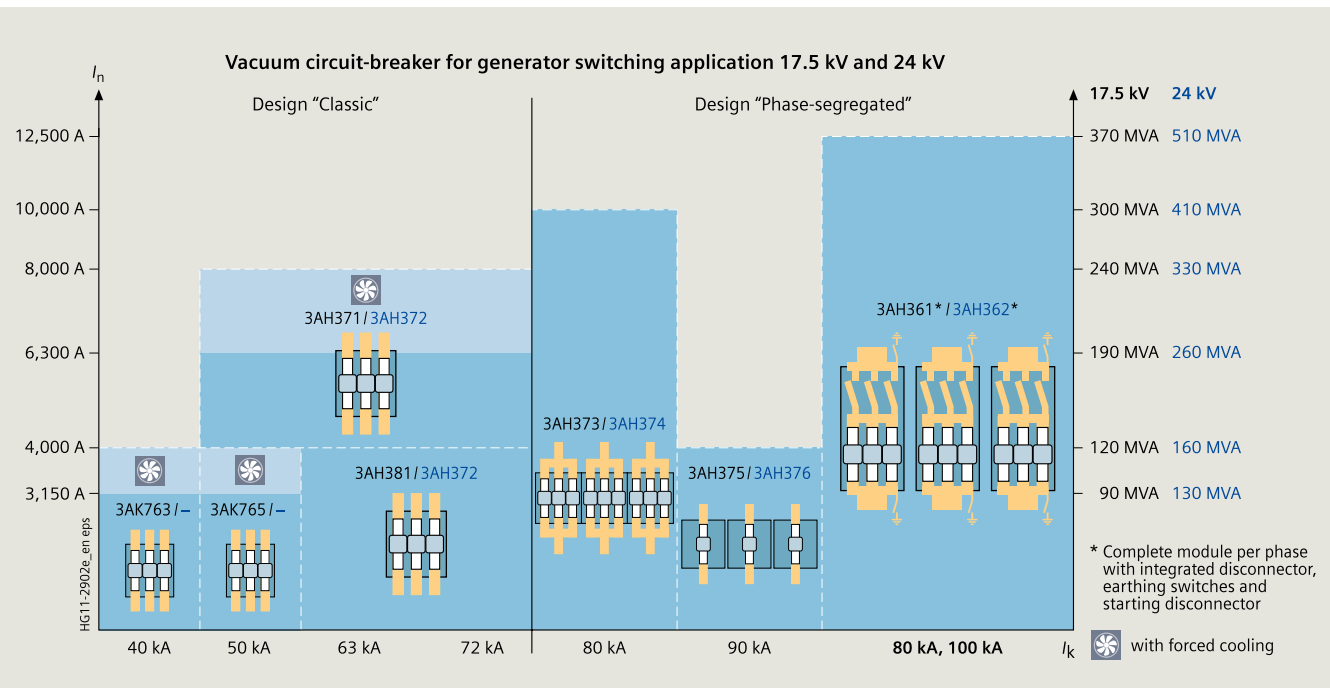

Fig. 4.3-2: Vacuum circuit-breaker for generator switching application 17.5 kV and 24 kV

Contactors

3TM and 3TL vacuum contactors (fig. 4.3-4 to fig. 4.3-6) are 3-pole contactors with electromagnetic operating mechanisms for medium-voltage switchgear. They are load breaking devices with a limited short-circuit making and breaking capacity for applications with high switching rates of up to 1 million operating cycles. Vacuum contactors are suitable for operational switching of alternating current consumers in indoor switchgear.

They can be used, e.g., for the following switching duties:

- AC-3, squirrel-cage motors: starting, stopping of running motor
- AC-4: starting, plugging and inching
- Switching of three-phase motors in AC-3 or AC-4 operation (e.g., in conveying and elevator systems, compressors, pumping stations, ventilation, and heating)
- Switching of transformers (e.g., in secondary distribution switchgear, industrial distributions)
- Switching of reactors (e.g., in industrial distribution systems, DC-link reactors, power factor correction systems)
- Switching of resistive consumers (e.g., heating resistors, electrical furnaces)
- Switching of capacitors (e.g., in power factor correction systems, capacitor banks).

In contactor-type reversing starter combinations (reversing duty), only one contactor is required for each direction of rotation if high-voltage high-rupturing capacity fuses are used for short-circuit protection.

The portfolio of the vacuum contactors is shown in table 4.3-4.

Fig. 4.3-4: Vacuum contactor 3TM

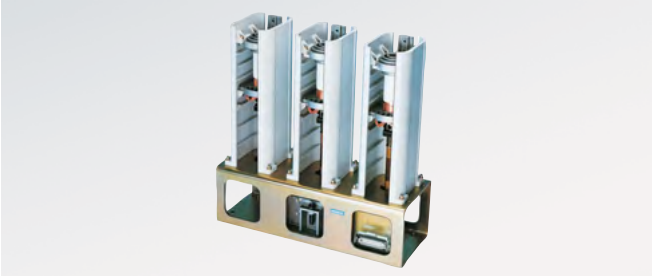

Fig. 4.3-5: Vacuum contactor 3TL71

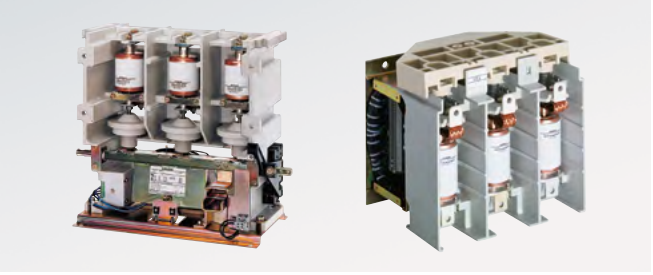

Fig. 4.3-6: Vacuum contactor 3TL81(left) and 3TL6 (right)

Type	3TL61	3TL65	3TL68	3TL71	3TL81	3TM32	3TM33	3TM34	3TM35
Rated voltage	7.2 kV	12 kV	15 kV	24 kV	7.2 kV	7.2 kV	7.2 kV	12 kV	12 kV
Rated frequency	50/60 Hz	50/60 Hz	50/60 Hz	50/60 Hz	50/60 Hz	50/60 Hz	50/60 Hz	50/60 Hz	50/60 Hz
Rated normal current	450 A	400 A	320 A	800 A	400 A	450 A	450 A	450 A	450 A
Rated making current*	4,500 A	4,000 A	3,200 A	4,500 A	4,000 A	4,500 A	4,500 A	4,500 A	4,500 A
Rated breaking current*	3,600 A	3,200 A	2,560 A	3,600 A	3,200 A	3,600 A	3,600 A	3,600 A	3,600 A
Mechanical endurance of the contactor*	3 million operating cycles	1 million operating cycles	1 million operating cycles	1 million operating cycles	1 million operating cycles	1 million operating cycles	1 million operating cycles	1 million operating cycles	1 million operating cycles
Electrical endurance of the vacuum interrupter (rated current)*	1 million operating cycles	0.5 million operating cycles	0.25 million operating cycles	0.5 million operating cycles	0.25 million operating cycles	0.25 million operating cycles	0.5 million operating cycles	0.25 million operating cycles	0.5 million operating cycles
Rated lightning impulse withstand voltage	60 kV	75 kV	75 kV	125 kV	60 kV	60 kV	60 kV	75 kV	75 kV
Rated short-duration power-frequency withstand voltage	20 kV	28 kV	38 kV	50 kV	20 kV	20 kV	32 kV	28 kV	42 kV

* Switching capacity according to utilization category AC-4 (cos φ = 0.35)

Table 4.3-4: Portfolio of vacuum contactors

Contactor-fuse combination

Contactor-fuse combinations 3TL62/63/66 are type-tested units comprising contactors and HV HRC (high-voltage high-rupturing capacity) fuses. They have been specially developed for flexible use in restricted spaces, and do not require any additional room for HV HRC fuses or any additional conductors between contactor and fuse. The components are laid out on the base plate so as to enable optimum ventilation, thereby allowing a high normal current. This design even meets the high dielectric strength standards required in countries such as China.

A number of different designs are available for integration in the switchgear panel, for example with different pole-center distances and widths across flats. A choice of single and double fuse holders, control transformer and an extensive range of other accessories are available as delivery versions (table 4.3-5).

Type	3TL62	3TL63	3TL66
Rated voltage	7.2 kV	7.2 kV	12 kV
Rated normal current (depending on installation and coordination with the selected fuses)	450 A	400 A	400 A
Thermal current I_{th}	Depending on installation and coordination with the selected fuses		
Rated short-circuit breaking current I_{SC} (prospective)	50 kA	50 kA	40 kA
Max. let-through current I_D	46 kA	46 kA	46 kA
Short-circuit capability of the contactor (limit switching capacity)	5 kA	4.6 kA	4.6 kA
Rated lightning impulse withstand voltage (to earth / open contact gap)	60 kV / 40 kV	60 kV / 40 kV	75 kV / 60 kV
Rated short-duration power-frequency withstand voltage	20 kV	32 kV	28 kV
Switching rate	1,200 operating cycles/h	600 operating cycles/h	600 operating cycles/h
Mechanical endurance	1 mio. operating cycles	1 mio. operating cycles	1 mio. operating cycles
Max. number of fuses per phase	1 × 315 A or 2 × 250 A	1 × 315 A or 2 × 250 A	1 × 200 A or 2 × 200 A
Pole-center distances	120 mm	120 mm	120 mm
Widths across flats	205 mm, 275 mm, 310 mm		
Various different contact systems and comprehensive accessories are available			

Table 4.3-5: Portfolio of contactor-fuse combination 3TL6

1
2
3
4
5
6
7
8
9
10
11
12
?

Construction

The contactor-fuse combination (fig. 4.3-7, fig. 4.3-8) consists of the components vacuum contactor (1), insulating cover with fuse holder (2), fuse-links (3), contacts (4), and optionally a control transformer (5). These are accommodated on a base plate (6).

In normal operation, the vacuum contactor (1) breaks the corresponding currents reliably. To do this, the vacuum switching technology, proven for nearly 40 years, serves as arc-quenching principle by using vacuum interrupters. The vacuum interrupters are operated by the magnet system through an integral rocker.

The insulating cover with fuse holder (2) is mounted on one side of the contactor. On the other side it stands on a cross member (7) under which there is room for the optional control transformer. The holders, which are especially conceived for the use of two HV HRC fuse-links, ensure a homogeneous distribution of the current to the two fuse-links of one phase.

The contactor-fuse combination is optimized for using 3GD2 fuses. But also fuse links from other manufacturers can be used (3). When selecting the fuses for an operational scenario, the technical limit values such as heating due to power dissipation, the limit switching capacity, and the maximum let-through current must be taken into account.

The contacts (4) are used to establish the connection to the busbar compartment and the cable compartment via bushings, which can also be delivered optionally.

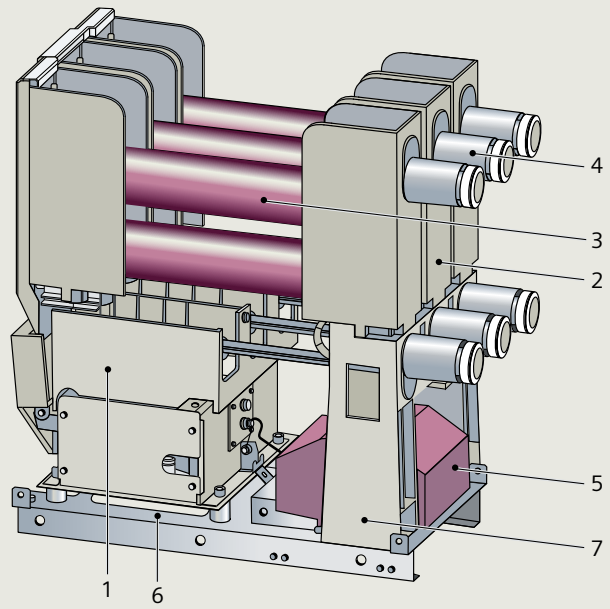

1 Vacuum contactor
2 Insulating cover with fuse holder
3 Fuse element
4 Disconnecting contacts
5 Optional control transformer
6 Base plate
7 Cross member

Fig. 4.3-7: Construction of the contactor-fuse combination 3TL6

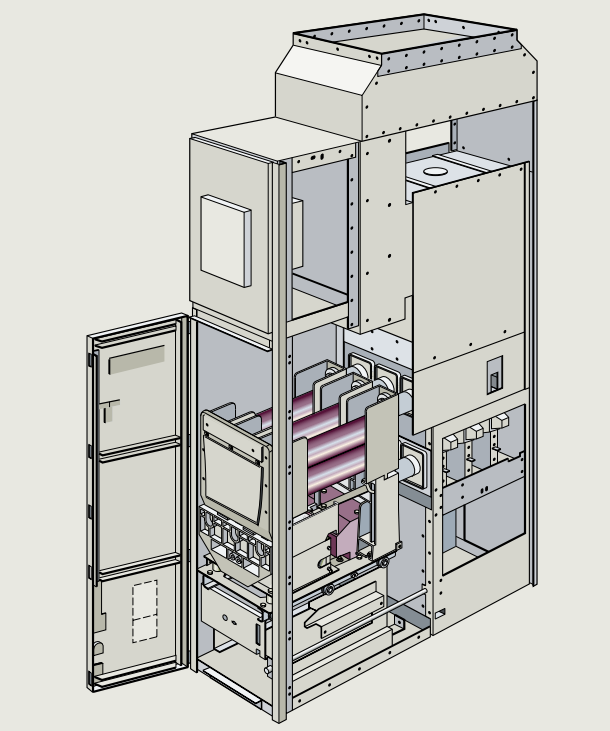

Fig. 4.3-8: Installation of the contactor-fuse combination in the contactor panel

The optional control transformer (5) is connected to the high-voltage terminals of the contactor-fuse combination on its primary part, so that no additional cables are required. To protect the transformer, a separate upstream fuse is series-connected on the primary side and accommodated in the cross-member. Due to its different versions, the control transformer can be optimally selected to the existing power system.

Mode of operation
Basically, there are three different modes or states of operation: normal operation, short circuit and overload.

During normal operation, the combination behaves like a contactor. To close the contactor, the magnetic system can be operated with a control current, optional taken out of the control transformer. The DC magnet system operates as an economy circuit, proving a high mechanical endurance and a low pickup and holding power. An optional latch may hold the vacuum contactor in closed position even without excitation of the magnet system. The vacuum contactor is released electrically by means of a latch release solenoid or mechanically by an optional cabel operated latch release.

In case of short circuit, the HV HRC fuse melts already during the current rise. The released thermal striker activates an indication and operates the vacuum contactor. In the optimum time sequence, the fuse has already interrupted the short-circuit current at this time.

In case of overload, a high continuous current overloads the fuse-link thermally, thus tripping the thermal striker. The contactor already operates within the arcing time of the fuse, making a take-over current flow through the vacuum interrupters. The take-over current must not exceed maximum switching capability, as this could damage the vacuum interrupter. This is prevented by selecting the correct fuse.

Application examples
Contactor-fuse combinations are suitable for operational switching of alternating-current consumers in indoor switchgear. They are used, for example, for the following switching functions:
- Starting of motors
- Plugging or reversing the direction of rotation of motors
- Switching of transformers and reactors
- Switching of resistive consumers (e.g., electric furnaces)
- Switching of capacitors and compressors.

With these duties, contactor-fuse combinations are used in conveyor and elevator systems, pumping stations, air-conditioning systems, as well as in systems for reactive power compensation, and can therefore be found in almost every industrial sector.

Standards
Contactor-fuse combinations 3TL62/63/66 are designed according to the following standards for high-voltage alternating-current contactors above 1 kV and up to 12 kV:

IEC 62271-1	DIN EN 62271-1
IEC 62271-106	DIN EN 62271-106
IEC 60529	DIN EN 60529
IEC 60721	DIN EN 60721
IEC 60282-1	DIN EN 60282-1
Test voltage according to GB 14808, DL/T 593	

Advantages at a glance
- Up to one million electrical operating cycles
- Usable for all kinds of switching duties
- Maintenance-free, reliable operation of vacuum interrupter and magnetic operating mechanism for maximum cost-efficiency
- Wide range of types for the most varied requirements
- Type-tested, compact construction (also for installation in narrow switchgear panels)
- Specially developed fuse holders for homogeneous current distribution
- Optimized construction for high power density
- Reliable for optimized availability
- Excellent environmental compatibility
- Over 35 years experience with vacuum contactors.

Auxiliary switches

Application

The auxiliary switch is a switch to be operated mechanically for a short or continuous contact command. It is integrated in the secondary circuit of circuit-breakers of different characteristics as well as in electromagnetic interlocking systems, and is used

- for mutual electrical interlocking of the systems
- for operation of auxiliary contactors, magnet coils, and releases
- for operation of motor operating mechanisms.

In Siemens switching devices it is used as a positively-driven auxiliary switch.

Properties

- Auxiliary switch without latches and stops, for mechanical operation
- Can be used for any rotation angle
- Can be ordered with switching levels from 2 to 26, whereby these can be configured individually.

The switching levels can be freely configured as NC, NO or changeover contacts. Moreover, different switching angles and contact overlappings can be selected.

The device conforms to the standards IEV 947 Part 3, Part 5-1 and DIN VDE 0660 Part 107, as well as IEC 721 Part 3-3.

Technical data	
Rated operational voltage U_e	230 V AC / 240 V DC
Rated insulation voltage U_i	250 V AC / DC
Rated thermal current I_{th2}	10 A
Rated making capacity	50 A
Mechanical endurance	100,000 operating cycles
Electrical service life	30,000 operating cycles
Type of connection	AMP flat plug-in connections
Temperature limit	-25° C

Table 4.3-6: Technical data of the auxiliary switch

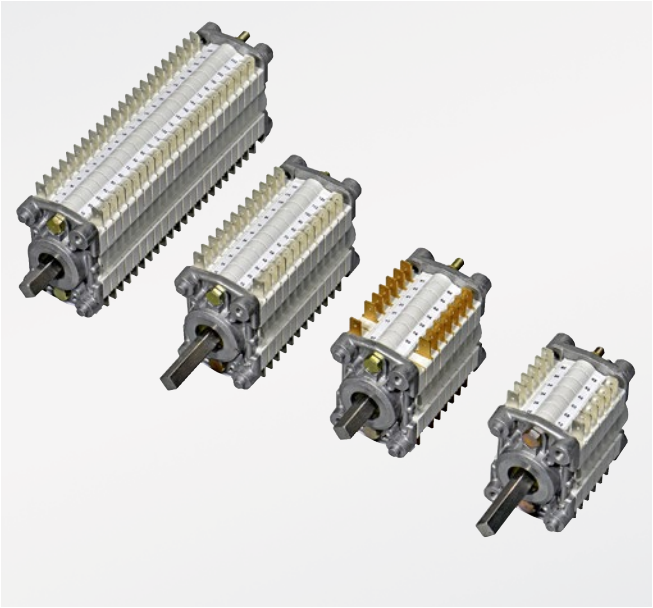

Fig. 4.3-9: Auxiliary switch 3SV9

4.3.2 Outdoor devices

Vacuum circuit-breakers

Outdoor vacuum circuit-breakers perform the same functions as indoor circuit-breakers (table 4.3-2) and cover a similar product range. Due to their special design, they are preferred for use in power supply systems with a large extent of overhead lines. When using outdoor vacuum circuit-breakers, it is not necessary to provide for closed service locations for their installation.

The design comprises a minimum of moving parts and a simple structure in order to guarantee a long electrical and mechanical service life. At the same time, these circuit-breakers offer all advantages of indoor vacuum circuit-breakers.

In live-tank circuit-breakers (fig. 4.3-10), the vacuum interrupter is housed inside a weatherproof insulating enclosure, e.g., made of porcelain. The vacuum interrupter is at electrical potential, which means live.

The significant property of the dead-tank technology is the arrangement of the vacuum interrupter in an earthed metal enclosure (fig. 4.3-11).

The portfolio of outdoor vacuum circuit-breakers is shown in table 4.3-7.

Fig. 4.3-10: Live-tank circuit-breaker

Fig. 4.3-11: Dead-tank circuit-breaker

Type	3AF01 / 3AF03	3AF04 / 3AF05 for AC traction power supply	SDV6 / SDV7	SDV7M
Rated voltage	12 – 40.5 kV	27.5 kV	15.5 – 38 kV	15.5 – 27.6 kV
Rated short-duration power-frequency withstand voltage	48 kV – 95 kV	95 kV	50 – 80 kV	50 – 60 kV
Rated lightning impulse withstand voltage	85 kV – 170 kV	200 kV	110 – 200 kV	110 – 150 kV
Rated normal current	630 – 2,500 A	2,500 A	1,200 – 3,000 A	1,200 – 2,000 A
Rated short-circuit breaking current	20 – 31.5 kA	31.5 kA	20 – 40 kA	20 – 25 kA
Number of poles	3	1 or 2	3	3
Operating mechanism	Spring	Spring	Spring	Magnetic
Design	Live-tank	Live-tank	Dead-tank	Dead-tank

Table 4.3-7: Portfolio of outdoor vacuum circuit-breakers

Reclosers

Vacuum reclosers offer dependable protection for overhead lines in order to provide improved reliability of the distribution network. At the core of the system, the controller provides a high level of protection, easiest operation, and high operating efficiency.

Up to 90 % of the faults in overhead line networks are temporary in nature. In case of a fault, a vacuum recloser trips to interrupt the fault current. Technical data and ratings see (table 4.3-8). After a few cycles, it recloses again and will remain closed if a transient fault has disappeared. This cycle is performed up to five times in order to bring the line back to service before the device finally switches to a lockout state should a permanent network fault be present.

Siemens vacuum reclosers can easily be installed anywhere on the overhead line, so grid operators can choose an easily accessible location. The reclosers will be parameterized to sequentially protect the feeder in either star, ring or meshed networks.

The included trouble-free operating features are:
- Advanced vacuum switching technology
- A sophisticated solid epoxy insulation system with integrated sensors
- A dual-coil low-energy magnetic actuator
- The advanced Siemens controller
- A weatherproof control cubicle
- Reliable operation due to self-monitoring and standby.

Controller

The controller (fig. 4.3-12) – the "brain" of the recloser – comprises indicators and control elements, communication interfaces, and a USB port for convenient connection of a laptop. Access to the user level is protected by multilevel password authentication. The controller is mounted in a cubicle which also contains the auxiliary power supply and a battery-backed UPS unit, fuses, and a general purpose outlet to power a laptop.

The controller provides comprehensive protection functions as:
- Earth-fault and sensitive earth-fault detection along with time-overcurrent protection (definite and inverse)
- Inrush restraint
- Load shedding.

Further features of the controller are:
- A multitude of inputs and outputs for customer use
- Additional communication modules for data transfer
- Self-monitoring and measuring functions.

Switch unit

The switch unit (fig. 4.3-13) contains integrated current transformers and optionally also voltage sensors. It consists of one or three poles and the actuator housing. The poles are made of weatherproof epoxy resin which holds the vacuum interrupter. A switching rod connects the vacuum interrupter with the magnetic actuator.

Fig. 4.3-12: Argus-M controller

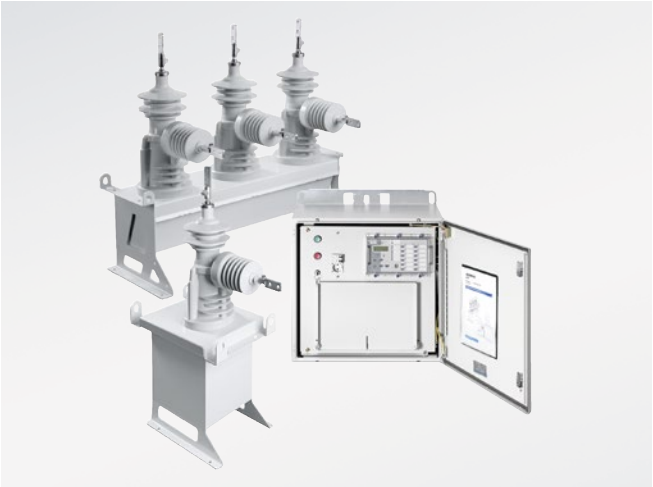

Fig. 4.3-13: Vacuum recloser with cubicle and controller

A mechanical lockout handle, which allows for mechanical tripping and lockout, sticks out of the actuator housing. As long as this handle is extended, the unit can neither be closed electrically nor mechanically. The lockout handle needs to be reset manually to activate the unit.

A position indicator is located underneath the housing. Thanks to its size and the application of reflective materials, the indicator is highly visible from the ground and the switching state can be clearly recognized even at night.

Rated normal current	200 A to 800 A
Rated voltage acc. to ANSI C37-60	12 kV; 15.5 kV; 27 kV; 38 kV
Short-circuit breaking current	12.5 kA; 16 kA
Lightning impulse withstand voltage	95 kV to 190 kV
Number of operating cycles	10,000
Number of short-circuit operations	up to 200
Number of phases	three-phase; single-phase; single-triple
Standards	ANSI C37.60; IEC 62271-111; IEC 60255; IEC 62271-100

Table 4.3-8: Technical data and ratings

1
2
3
4
5
6
7
8
9
10
11
12

Fusesavers

Application

Rural networks challenges
In most rural networks, the feeder itself is supplied and/or protected by a circuit-breaker or recloser. Lateral lines (also referred to as spur lnes or T-offs) are usually protected by fuses.

As a fuse is unable to distinguish between temporary and permanent faults, it blows on all faults, causing downstream customers to lose power and requiring a maintenance crew to replace the fuse. In rural networks it may take hours for the maintenance crew to drive to site, check the line for faults, and reconnect supply. This leads to unnecessarily high maintenance costs for the operator. Since typically 80 % of the overhead line's faults are temporary, 80 % of interruptions by fuses are unnecessary.

Fusesaver, the world's fastest outdoor vacuum circuit-breaker, is the most cost-efficient solution for optimizing reliability while minimizing operating costs of rural distribution systems. It is capable of almost completely removing the impacts of temporary faults on lateral lines. Fusesaver is a new class of intelligent, compact and low-cost single-phase circuit-breaker. The Fusesaver complies with the relevant sections of IEC 62271-100.

With onboard microprocessor control and wireless communication, Fusesaver has configurable protection and multi-phase operation functions, fault recording, as well as load profiling, and can be integrated into a SCADA system. This device is operated on line potential, as it is hanging directly on the overhead line. It self-powers by decoupling energy from the line current. Fault detection is achieved with an extremely fast protection algorithm.

Fig 4.3-14: 3AD8 Fusesaver with RCU

Rated value	Low range	Standard range	High range
Minimum line current for operation	0.15 A	0.5 A	1.0 A
Fuse ratings	2 to 20 A	5 to 50 A	5 to 100 A
Rated current	40 A	100 A	200 A
Rated short-circuit breaking current I_{sc}	1.5 kA	4 kA	4 kA
Rated short-circuit making current I_{peak}	3.75 kA	10 kA	10 kA
Rated short-time withstand current	1.5 kA	4 kA	4 kA
Rated short-time current duration	0.2 s	0.2 s	1.0 s
Fault break operations at 100%	300 times	70 times	70 times

Table 4.3-9: Three main options, based on the minimum line current to self-power the Fusesaver, are available

Voltage ranges		
Rated voltage	15.5 kV	27 kV
Rated lightning impulse withstand voltage U_p	110 kV	125 kV
Rated power-frequency withstand voltage U_d (60 s)	50 kV	60 kV

Table 4.3-10: Voltage rating options for Fusesavers

POWEREN.IR

Mode of operation

The Fusesaver is designed to

1. be installed in series with a fuse. When it senses a fault current, it will open before the fuse can melt, and stays open for a pre-determined time (dead time). Then, the Fusesaver closes again, reconnecting the supply (O-C), and stays closed.

2. replace the fuse altogether. When installed in this manner, the Fusesaver can perform the same OPEN-CLOSE functionality as described for the O-C Fusesaver to clear a transient fault. However, it can also perform a second open operation to clear a permanent fault without the help of a fuse (O-CO).

Principle of operation in case of temporary faults
In this case, the fault disappears during the Fusesaver's dead time. After closing, the power supply is restored, and the fuse does not blow. The Fusesaver is thus ready for the next fault. Only the consumers on the affected lateral experience an interruption in power during the Fusesaver's dead time, while all other consumers did not notice any interruption, thanks to the extremely fast opening within a half cycle.

Principle of operation in case of permanent faults
When the Fusesaver closes after its dead time, a permanent fault is still present, resulting in an immediate fault current.

Fusesaver with O-C functionality
The Fusesaver stays closed; therefore, the fault current will blow the fuse. Due to the permanent fault, loss of power is unavoidable for consumers on this lateral, while all other consumers receive an uninterrupted power supply. The Siemens Fusesaver restricts blown fuses on lateral lines to such unavoidable cases of permanent faults.

Fusesaver with O-CO functionality
In this case, the Fusesaver operates again and stays open. The maintenance crew that has to remove the permanent fault from the line must then bring back the Fusesaver to operation. Loss of power is unavoidable for consumers on this lateral, while all other consumers receive an uninterrupted power supply.

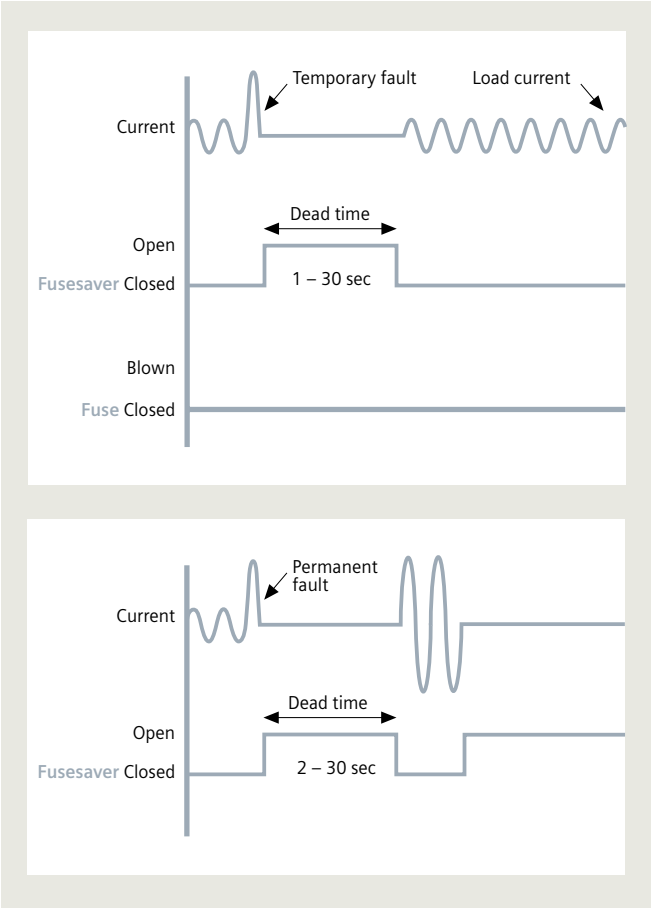

Fig 4.3-15: Modes of operation of the Fusesaver

4.4 Medium-voltage components

4.4.1 Surge arresters

Surge arresters and surge limiters

Surge arresters and surge limiters protect operational equipment both from external overvoltages caused by lightning strikes in overhead lines and from internal overvoltages produced by switching operations or earth faults. The arrester is normally installed between phase and earth. The built-in stack of non-linear, voltage-dependent resistors (varistors) made of metal oxide (MO) or zinc oxide (ZnO) becomes conductive from a defined overvoltage limit value, so that the load can be discharged to earth. When the power-frequency voltage underflows this limit value (the discharge voltage), the varistors return to their original resistance value, so that only a so-called leakage current of a few mA flows at operating voltage. Because this leakage current heats up the resistors, and thus the arrester, the device must be designed according to the neutral-point treatment of the system to prevent impermissible heating of the arrester.

In contrast to the normal surge arrester, the surge limiter contains a series gap in addition to the MO resistor stack. If the load generated by the overvoltage is large enough, the series gap ignites and the overvoltage can be discharged to earth until the series gap extinguishes, and the varistors return to their non-conductive state. This process is repeated throughout the entire duration of the fault. This makes it possible to design the device with a considerably lower discharge voltage as a conventional surge arrester, and is particularly useful for the protection of motors that normally have a poor dielectric strength. To guarantee a sufficient protective function, the discharge voltage value of the arresters or limiters must not exceed the dielectric strength of the operational equipment requiring protection.

The medium-voltage product range includes:

- The 3EB and 3EC surge arresters for railway DC as well as AC applications (fig. 4.4-1)
- The 3EF group of surge arresters and limiters for the protection of motors, dry-type transformers, airfield lighting systems, and cable sheaths, as well as for the protection of converters for drives (fig. 4.4-1)
- The 3EK silicone-housed surge arrester for distribution systems, medium-voltage switchgear up to 72.5 kV, and line surge arresters for outdoor use (fig. 4.4-2 and fig. 4.4-3).

An overview of the complete range of Siemens surge arresters appears in table 4.4-1, see next page.

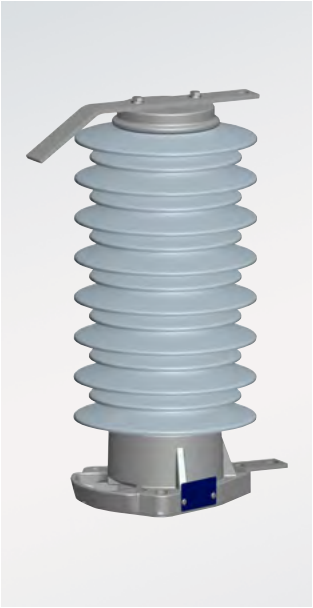

Fig. 4.4-1: Medium-voltage MO arrester for special applications

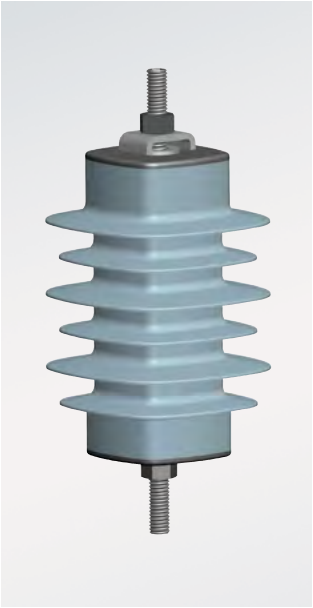

Fig. 4.4-2: Medium-voltage arrester 3EK4 for distribution systems

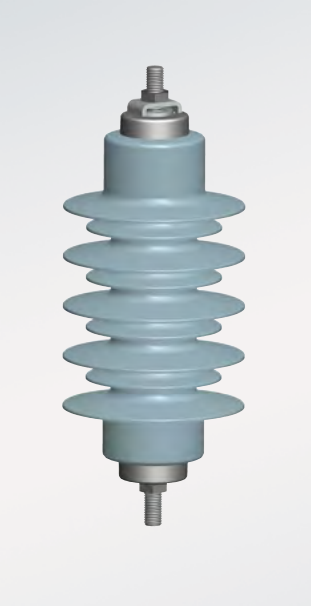

Fig. 4.4-3: Medium-voltage arrester 3EK7 for distribution systems

1
2
3
4
5
6
7
8
9
10
11
12
?

	Special applications	Railway applications				Medium-voltage distribution class	
	3EF1; 3EF3; 3EF4; 3EF5	3EB2	3EB3	3EC3	3EB4	3EK4	3EK7
					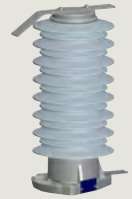		
Applications	Motors, dry-type transformers, airfield lighting systems, sheath voltage limiters, protection of converters for drivers	DC overhead contact lines	DC systems (locomotives, overhead contact lines)	DC systems (locomotives, overhead contact lines)	AC and DC systems (locomotives, overhead contact lines)	Distribution systems and medium-voltage switchgear	Distribution systems and medium-voltage switchgear
Highest voltage for equipment (U_m) kV	12	2	4	4	30	45	72.5
Maximum rated voltage (U_r) kV	15	2	4	4	45/4	36	60
Maximum nominal discharge current (I_n)	1 (3EF1/3) 10 (3EF4/5)	20	20	20	20	10	10
Maximum thermal energy rating (W_{th}) kJ/kV$_r$	13.0	10.0	26.0	10.0	10.0	n.a.	n.a.
Maximum thermal charge transfer rating (Q_{th}) C	n.a.	n.a.	n.a.	n.a.	n.a.	1.1	1.1
Maximum repetitive charge transfer rating (Q_{rs}) C	2.8	2.5	7.5	2.5	2.8/2.5	0.4	0.4
Rated short-circuit current (I_s) kA	40	40	40	40	50	20	20
Classification according to EN 50526-1	n.a.	DC-B	DC-C	DC-B	DC-B	n.a.	n.a.
Housing material	Polyethylene	Silicone	Silicone	Porcelain	Silicone	Silicone	Silicone
Design principle	Polyethylene directly molded onto MOV (3EF1); hollow insulator (3EF3/4/5)	Directly molded		Hollow insulator	Hollow insulator, silicone directly molded onto FRP tube	Cage design, silicone directly molded onto MOV	
Installation	Indoor	Outdoor	Outdoor	Outdoor	Outdoor	Outdoor	Outdoor/ Indoor

Table 4.4-1: Medium-voltage metal-oxide surge arresters and limiters (300 V to 72.5 kV)

4.5 Low-voltage components

4.5.1 Requirements on low-voltage components in the three circuit types

Device application in the supply circuit

The system infeed is the most "sensitive" circuit in the entire power distribution. A failure here would affect the whole network, leaving the building or the production concerned without power. This worst-case scenario must be considered during the planning. Redundant system supplies and selective protection settings are important preconditions for a safe network configuration. The selection of the correct protection devices is therefore of elementary importance in order to create these preconditions. Some of the key dimensioning data is described in the following.

Rated current

The feeder circuit-breaker in the low-voltage main distribution unit (LVMD) must be dimensioned for the maximum load of the transformer/generator. When using ventilated transformers, the higher normal current of up to 1.5 × I_N of the transformer must be taken into account.

Short-circuit strength

The short-circuit strength of the feeder circuit-breaker is determined by $(n-1) \times I_{k\,max}$ of the transformer or transformers (n = number of transformers). This means that the maximum short-circuit current that occurs at the place of installation must be known in order to specify the appropriate short-circuit strength of the protection device (I_{cu}: rated ultimate short-circuit breaking capacity). Exact short-circuit current calculations including attenuations of the medium-voltage levels or the laid cables can be made, for example, with the aid of the SIMARIS design dimensioning software. SIMARIS design determines the maximum and minimum short-circuit currents and automatically dimensions the correct protection devices.

Utilization category

When dimensioning a selective network, time grading of the protection devices is essential. When using time grading up to 500 ms, the selected circuit-breaker must be able to carry the short-circuit current that occurs for the set time. Close to the transformer, the currents are very high. This current-carrying capacity is specified by the I_{cw} value (rated short-time withstand current) of the circuit-breaker; this means the contact system must be able to carry the maximum short-circuit current, i.e., the energy contained therein, until the circuit-breaker is tripped. This requirement is satisfied by circuit-breakers of utilization category B (e.g., air circuit-breakers, ACB). Current-limiting circuit-breakers (molded-case circuit-breakers, MCCB) trip during the current rise. They can therefore be constructed more compactly.

Release

For a selective network design, the release (trip unit) of the feeder circuit-breaker must have an LSI characteristic. It must be possible to deactivate the instantaneous release (I). Depending on the curve characteristic of the upstream and downstream protection devices, the characteristics of the feeder circuit-breaker in the overload range (L) and also in the time-lag short-circuit range (S) should be optionally switchable (I^4t or I^2t characteristic curve). This facilitates the adaptation of upstream and downstream devices.

Internal accessories

Depending on the respective control, not only shunt releases (previously: f-releases), but also undervoltage releases are required.

Communication

Information about the current operating states, maintenance, error messages and analyses, etc. is being increasingly required, especially from the very sensitive supply circuits. Flexibility may be required with regard to a later upgrade or retrofit to the desired type of data transmission.

Device application in supply circuits (coupling)

If the coupling (connection of network 1 to network 2) is operated in open condition, the circuit-breaker (tie breaker) only has the function of a disconnector or main switch. A protective function (release) is not absolutely necessary.

The following considerations apply to closed operation:

- Rated current
  This must be dimensioned for the maximum possible normal current (load compensation). The simultaneity factor can be assumed to be 0.9.
- Short-circuit strength
  The short-circuit strength of the feeder circuit-breaker is determined by the sum of the short-circuit components that flow through the coupling. This depends on the configuration of the component busbars and their supply.
- Utilization category
  As for the system supply, utilization category B is also required for the current-carrying capacity (I_{cw}).
- Release
  Partial shutdown with the couplings must be taken into consideration for the supply reliability. As the coupling and the feeder circuit-breakers have the same current components when a fault occurs, similar to the parallel operation of two transformers, the LSI characteristic is required. The special zone selective interlocking (ZSI) function should be used for larger networks and/or protection settings that are difficult to determine.

Device application in the distribution circuit

The distribution circuit receives power from the higher level (supply circuit) and feeds it to the next distribution level (final circuit).

Depending on the country, local practices, etc., circuit-breakers and fuses can be used for system protection; in principle, all protection devices described in this chapter. The specifications for the circuit dimensioning must be fulfilled. The ACB has advantages if full selectivity is required. For cost reasons, however, the ACB is only frequently used in the distribution circuit with a rated current of 630 A or 800 A. As the ACB is not a current-limiting device, it differs greatly from other protection devices such as MCCB, MCB, and fuses.

Table 4.5-1 shows the major differences and limits of the respective protection devices.

Device application in the final circuit

The final circuit receives power from the distribution circuit and supplies it to the consumer (e.g., motor, lamp, non-stationary load (power outlet), etc.). The protection device must satisfy the requirements of the consumer, to be protected.

Note:
All protection settings, comparison of characteristic curves, etc., always start with the load. This means that no protection devices are required with adjustable time grading in the final circuit.

		ACB air circuit-breaker	MCCB molded-case circuit-breaker	Fuse switch-disconnector	Switch-disconnector with fuses	MCB miniature circuit-breaker	Reference values, specifications
Standards	IEC	Yes	Yes	Yes	Yes	Yes	Region
Application	System protection	Yes	Yes	Yes	Yes	Yes	Power supply system
Installation	Fixed mounting	Yes	Yes	Yes	Yes	Yes	Availability
	Plug-in	–	Up to 800 A	–	Partly	–	
	Withdrawable unit	Yes	Yes	–	–	–	
Rated current	I_n	6,300 A	1,600 A	630 A	630 A	125 A	Normal current I_B
Short-circuit breaking capacity	I_{cu}	Up to 150 kA	Up to 100 kA	Up to 120 kA	Up to 120 kA	Up to 25 kA	Maximum short-circuit current $I_{k\,max}$
Current-carrying capacity	I_{cw}	Up to 80 kA	Up to 5 kA	–	–	–	Circuit
Number of poles	3-pole	Yes	Yes	Yes	Yes	Yes	Power supply system
	4-pole	Yes	Yes	–	Partly	–	
Tripping characteristic	ETU	Yes	Yes	–	–	–	Power supply system
	TMTU	–	Up to 630 A	Yes	Yes	Yes	
Tripping function	LI	Yes	Yes	Yes [1)]	Yes [1)]	Yes	Power supply system
	LSI	Yes	Yes	–	–	–	
	N	Yes	Yes	–	–	–	
	G	Yes	Yes	–	–	–	
Characteristics	Fixed	–	Yes	Yes	Yes	Yes	Power supply system
	Adjustable	Yes	Yes	–	–	–	
	Optional	Yes	Yes	–	–	–	
Protection against electric shock, tripping condition	Detection of $I_{k\,min}$	No limitation	No limitation [*)]	Depends on cable length	Depends on cable length	Depends on cable length	Minimum short-circuit current $I_{k\,min}$
Communication (data transmission)	High	Yes	–	–	–	–	Customer specification
	Medium	Yes	Yes	–	–	–	
	Low	Yes	Yes	Yes	Yes	Yes	
Activation	Local	Yes	Yes	Yes	Yes	Yes	Customer specification
	Remote (motor)	Yes	Yes	–		–	
Derating	Full rated current up to	60 °C	50 °C	30 °C	30 °C	30 °C	Switchgear
System synchronization		Yes	Up to 800 A	–	–	–	Power supply system

[1)] According to the fuse characteristic

Table 4.5-1: Overview of the protection devices; *) with electronic trip unit (ETU): no limitation / with thermomagnetic trip unit (TMTU): depends on cable length

1
2
3
4
5
6
7
8
9
10
11
12
?

4.5.2 Low-voltage protection and switching devices

The following chapter focuses on the relevant characteristics and selection criteria of the respective devices (table 4.5-2 and table 4.5-3) that are used in the main power distribution circuits in commercial buildings and in the industry.

Note:
All figures apply to low-voltage power systems or distribution boards in IEC applications. Different regulations and criteria apply to systems according to UL standards. Depending on the country, standard specifications, local practices, planning engineer, technical threshold values, etc., low-voltage power distribution systems are made up of various protection devices.*

Circuits and device assignment

(see also section 3.2.4 "Medium-voltage switchgear")

Basic configuration of a low-voltage power distribution system, and assignment of the protection devices including core functions

Core functions in the respective circuits:

- Supply circuit
  Task: system protection
  Protection device:
  – ACB (air circuit-breaker)
- Distribution circuit
  Task: system protection
  Protection devices:
  – ACB (air circuit-breaker)
  – MCCB (molded-case circuit-breaker)
  – SD (switch-disconnector)
- Final circuit
  – Task 1: motor protection
    Protection devices:
    - MPCB (motor protector circuit-breaker)
    - SD (switch-disconnector)
    - MSP (contactor, overload relay, motor protection, and control devices)
  – Task 2: system and personnel protection
    Protection devices:
    - RCD (residual current protection devices)
      Personnel, material and fire protection, as well as protection against direct contact
    - AFDD (arc fault detection devices)
      Enhanced fire protection through the detection and isolation of arc faults.

* *If you have questions on UL applications, please contact your local Siemens representative. Siemens provides solutions for these applications, but they must be treated completely differently.*

Circuit-breakers		
ACB	**Air circuit-breaker** – Non-current-limiting circuit-breaker – Current-zero cut-off circuit-breaker	
MCCB	**Molded-case circuit-breaker** – Current-limiting circuit-breaker	
MCB	**Miniature circuit-breaker**	
MSP	**Motor starter protector**	
MPCB	**Motor protector circuit-breaker** – Circuit-breaker for motor protection	

Table 4.5-2: Overview of circuit-breaker types

Switching devices (fuse-switch-disconnector/disconnector)	
SD	**Switch-disconnector** Depending on the type of operation, these devices are divided into two main groups:
Operator-dependent	
Fuse-switch-disconnector: Without circuit-breaker latching system, with protection (fuse, moved when making and breaking)	
Disconnector with fuse: With circuit-breaker latching system, with protection (fuse, not moved when making and breaking)	
Operator-independent	
Disconnector without fuse: With circuit-breaker latching system, without protection (without fuse); only used to interrupt the circuit	

Table 4.5-3: Overview of switching and protection devices

Criteria for device selection

A protection device is always part of a circuit (fig. 4.5-1) and must satisfy the corresponding requirements (see also section 3.2.4 "Medium-voltage switchgear"). The most important selection criteria are shown in the following.

Main selection criteria

Fig. 4.5-2 shows the seven basic and most important selection criteria that must be taken into account for the device selection.

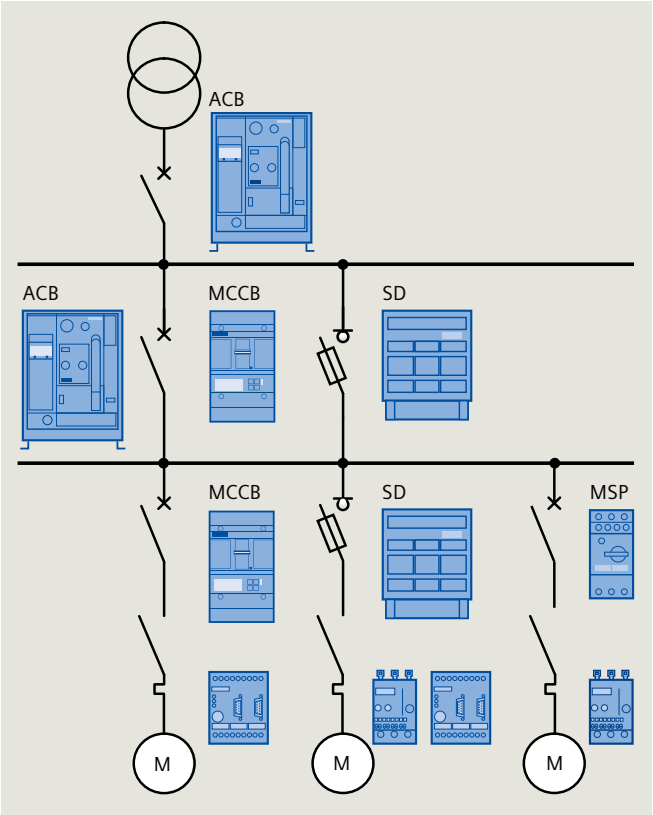

Fig. 4.5-1: Core functions of the protection devices in the individual circuit types

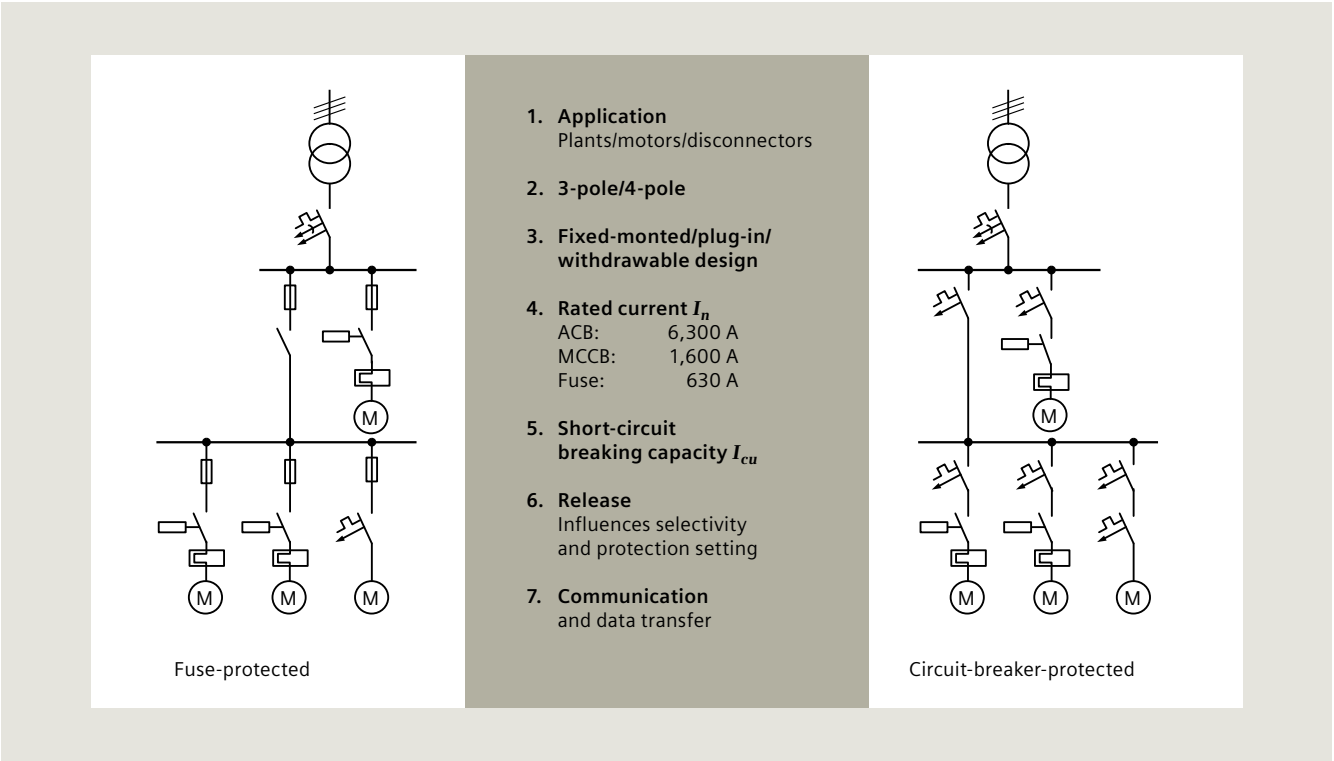

Fig. 4.5-2: Main selection criteria

4.5.3 Power monitoring system for the low-voltage power distribution

The focus of a power monitoring system is on the demand for improved transparency of energy consumption and energy quality, as well as on ensuring the availability of power distribution. Holistic transparency is the basis for optimizing power consumption and costs. The information obtained through this transparency provides a realistic basis for cost center allocations as well as for measures to improve the energy efficiency and power quality. In addition, it documents the savings achieved.

Functions of the power monitoring system

- Analysis of the energy data, energy flows, and power quality with specific load curve diagrams
- Visualization of the interdependencies
- Detection of savings potentials, assessed minimum and maximum values
- Energy measurements for accounting purposes (internal cost center allocation, external billing)
- Benchmarking, internal (rack-line / building part) or external (property/installations with comparable use based on obtained measured values)
- Visualization of the power supply with switching states and energy flows
- Preparation of decisions, e.g., regarding power supply extensions
- Verifiable efficiency improvements
- Targeted troubleshooting from fast, detailed information about events and faults that occur in the power distribution system inside the server room / building
- Fault and event messages (e.g., switching sequences) are logged with a date and time stamp, so that downtimes can be documented and fault processes traced and analyzed later using the data recorded
- Compliance with purchasing contracts via the selective control of consuming devices
- Automatic notification of the service personnel.

Levels of the power monitoring system

Power monitoring is the special energy view on a building or an infrastructure property ranging from the power infeed and distribution through to the power consumers themselves. It comprises the following levels:

- Energy value acquisition using (7KT/7KM PAC) measuring devices and (3WL/3VA/3VL) circuit-breakers
- Processing of the measurement data
- Monitoring including visualization, archiving, reports, and messaging.

Data acquisition systems and measuring devices can be directly connected to the server with the power monitoring software, e.g., "powermanager" from Siemens, via Modbus TCP (fig. 4.5-3). The software then handles the actual recording, visualization and logging of the acquired values. A SIMATIC S7 controller allows a comparable network for industrial bus systems such as PROFINET or PROFIBUS-DP to be built up. PROFIBUS expansion modules can be used for the direct integration of measuring devices, as well as for the 7KM PAC3200, for example. In both cases, a 7KM PAC4200 measuring device can serve as a gateway to a subordinate Modbus RTU network linked either via Modbus TCP or via PROFIBUS-DP using PROFIBUS expansion modules.

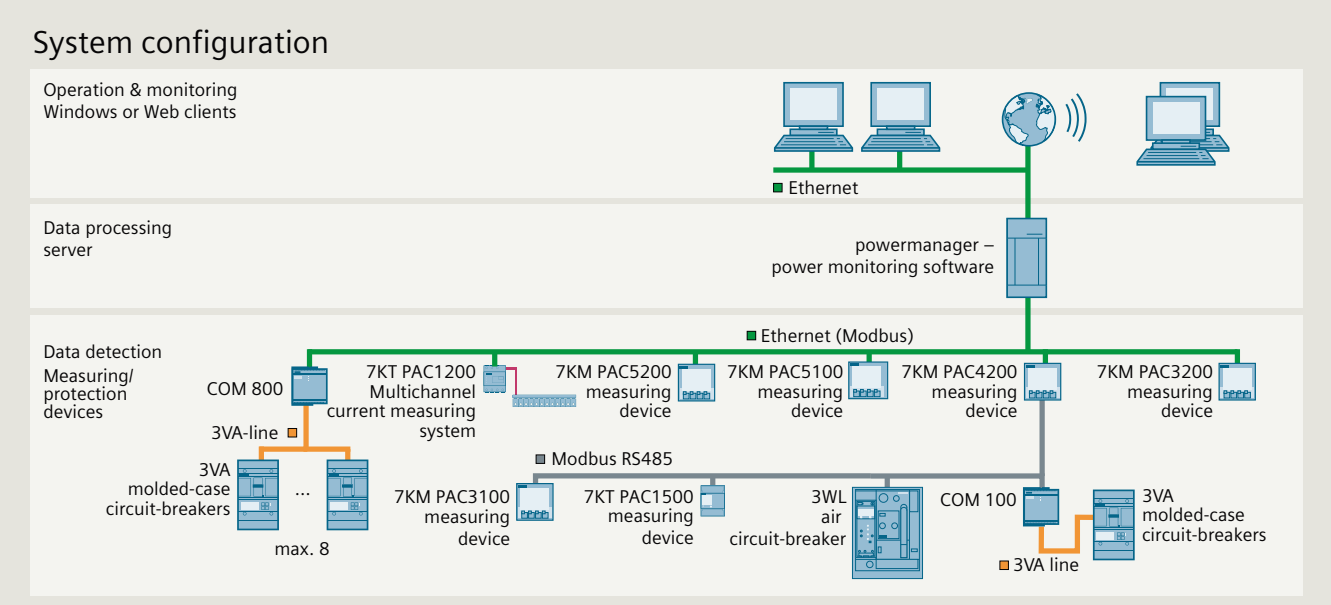

Fig. 4.5-3: Network structure of a power management system

4.5.4 Software for power system dimensioning

An exact protection device selection, and thus the dimensioning of power distribution systems, requires extensive short-circuit current and voltage drop calculations. Catalog data for the short-circuit energies, the selectivity and the backup protection of the individual devices and assemblies must also be consulted. In addition, the appropriate regulations and standards must be observed. At this point, a reference should be made to the SIMARIS design dimensioning tool that automatically takes account of the above-mentioned conditions, catalog data, standards, and regulations, and consequently makes the device selection automatically.

Selectivity and backup protection

Rooms used for medical purposes (IEC 60364-7-710, VDE 0100-710) and meeting rooms (IEC 60364-7-718, VDE 0100-718) require the selection of protection devices in subareas. For other building types, such as data centers, there is an increasing demand for a selective grading of the protection devices, because only the circuit affected by a fault would be disabled with the other circuits continuing to be supplied with power without interruption.

Because the attainment of selectivity results in increased costs, it should be decided for which circuits selectivity is useful. Backup protection is the lower-cost option. In this case, an upstream protection device, e.g., an LV HRC fuse as group backup fuse, supports a downstream protection device in mastering the short-circuit current, i.e., both an upstream and a downstream protection device trip. The short-circuit current, however, has already been sufficiently reduced by the upstream protection device so that the downstream protection device can have a smaller short-circuit breaking capacity. Backup protection should be used when the expected solid short-circuit current exceeds the breaking capacity of the switching device or the consumers. If this is not the case, an additional limiting protection device unnecessarily reduces the selectivity or, indeed, removes it.

The following scheme should be followed for the selectivity or backup protection decision:

- Determine the maximum short-circuit current at the installation point
- Check whether the selected protection devices can master this short-circuit current alone or with backup protection using upstream protection devices
- Check at which current the downstream protection devices and the upstream protection devices are selective to each other.

Selectivity and backup protection exemplified for a data center

Data centers place very high demands on the safety of supply. This is particularly true for the consumers attached to the uninterruptible power supply, and ensures a reliable data backup in case of a fault and service interruption. Those solutions providing selectivity and backup protection relying on the previously mentioned SIMARIS design configuration tool should be presented at this point. Fig. 4.5-4 shows a distribution system in SIMARIS design. A 3WL circuit-breaker as outgoing feeder switch of the main distribution is upstream to the distribution system shown here.

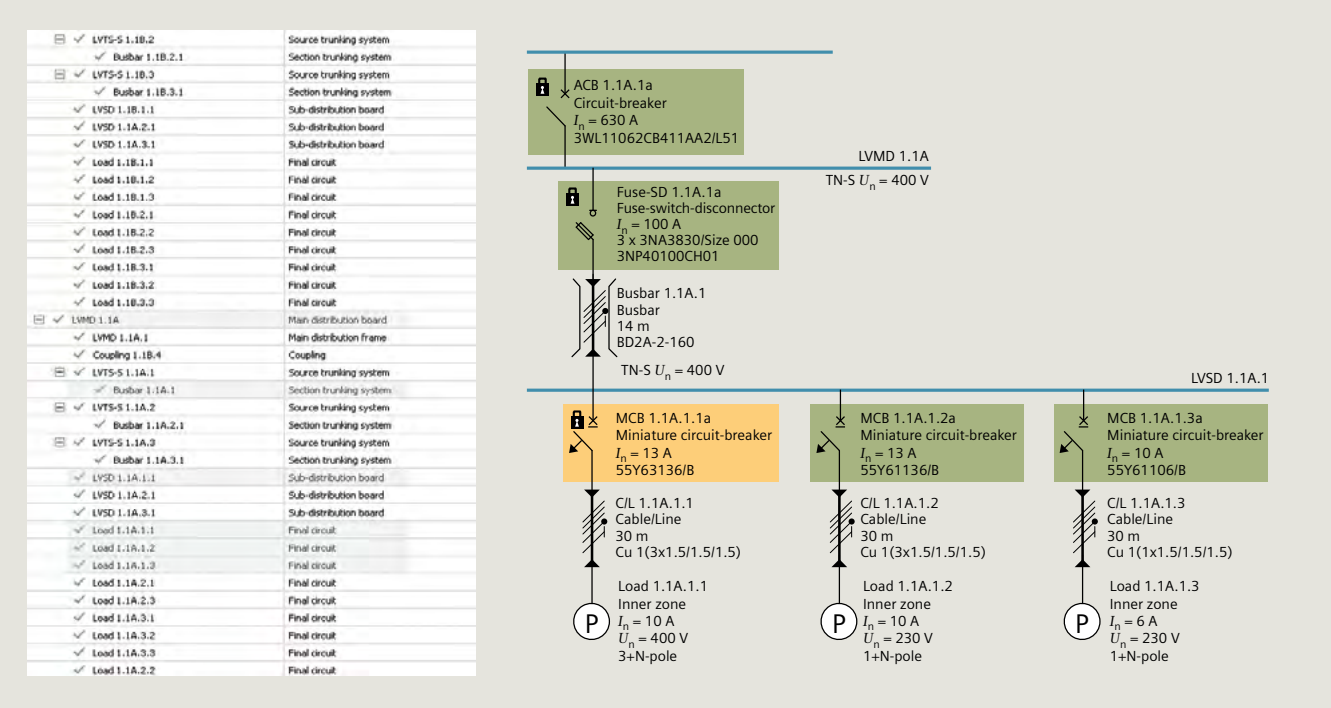

Fig. 4.5-4: Subdistribution in a data center; display in SIMARIS design

1
2
3
4
5
6
7
8
9
10
11
12
?

The following figures show the selectivity diagrams for the considered distribution system automatically generated by SIMARIS design (fig. 4.5-5). SIMARIS design specifies the characteristic curve band of the considered circuit (red lines), the envelope curves of all upstream devices (blue line) and all downstream devices (green line). In addition to the specification of the minimum and maximum short-circuit currents, any selectivity limits for the individual circuits are also specified.

Fig. 4.5-6 shows the selective grading of the 3WL circuit-breaker from the main distribution system and the group backup fuse (100 A LV HRC fuse) of the subdistribution system. The consumers critical for functional endurance which are installed in a redundant manner in the subdistribution system should not be protected with the same backup fuse but rather be assigned to different groups.

The selectivity diagram shows the circuit diagram of a single-phase consumer in the subdistribution system. This circuit diagram is protected with a 10 A miniature circuit-breaker with characteristic B and for a maximum short-circuit current of 5,892 kA selective to the 100 A group backup fuse.

The same subdistribution system also contains an example for backup protection. Fig. 4.5-7 shows the selectivity diagram for the combination of the group backup fuse with a 13 A miniature circuit-breaker of the characteristic B. Up to the breaking capacity of the 6 kA miniature circuit-breaker, the two protection devices are selective to each other. Above this value, the current is limited by the fuse and the miniature circuit-breaker protected by a fuse; both devices trip.

SIMARIS design automatically generates these characteristic curves to provide exact information about the maximum and minimum short-circuit currents of the associated circuit. Fig. 4.5-7 also shows up to which current ($I_{sel\text{-}short\text{-}circuit}$) the protection devices are selective to each other.

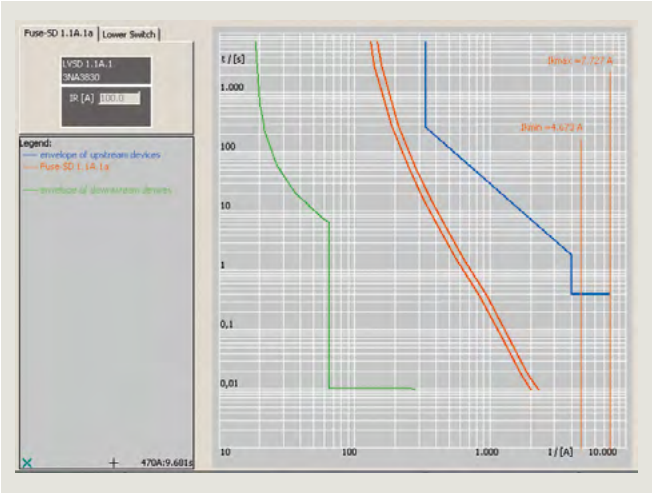

Fig. 4.5-5: Selectivity of the group backup fuse to the upstream protection devices

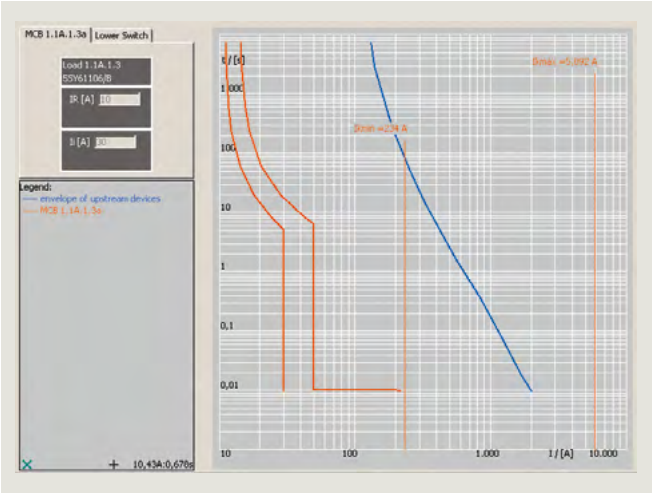

Fig. 4.5-6: Selectivity of the group backup fuse/miniature circuit-diagram combination

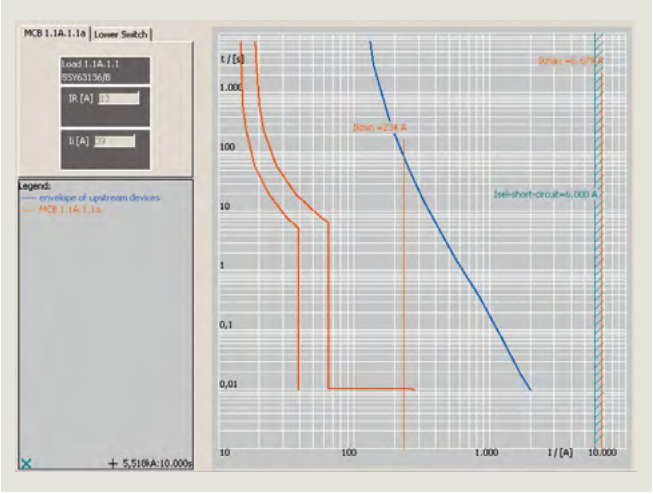

Fig. 4.5-7: Backup protection of the group backup fuse/miniature circuit-breaker

1
2
3
4
5
6
7
8
9
10
11
12
?

4.5.5 The safe power supply with renewable energy sources

Whether for wind power, photovoltaics or electromobility: Siemens' integrated portfolio offers high-quality and standard-compliant components for the implementation of sustainable power concepts.

Sustainable energy concepts

In view of the limited resources of fossil fuels, the use of renewable energy sources is becoming increasingly important. Alongside wind turbines, photovoltaic systems are a key area of interest. Both the ecological and economic aspects of these systems are of great importance. As a global leading supplier of first-class, standard-compliant components and systems for low-voltage power distribution, Siemens contributes to a responsible and sustainable use of electrical energy.

With a consistent portfolio enabling power supply and distribution, personal, fire and line protection, as well as power monitoring, Siemens supports sustainable energy concepts in the areas of wind energy, photovoltaics, electromobility, and smart buildings, infrastructures, and industry (fig. 4.5-8).

Wind power plants face demanding ambient conditions

The power output of a wind turbine can change with the wind strength and direction quickly and unexpectedly. The components used in the nacelle are also subjected to mechanical stresses and climatic effects around the clock – especially low-frequency vibrations and temperature changes between –25 °C and +50 °C. Current-carrying components are also subjected to thermal stress by the frequent on/off switching of the wind turbine.

To reliably maintain the functional capability and availability of the protection equipment under these circumstances, components must be used, which have a safe range that is matched to the requirements of the wind turbine. Siemens' protection, switching and measuring devices with optional communication modules, which support the monitoring of the plant and the adherence to the service intervals, provide an ideal solution.

Fig. 4.5-8: Key technologies for a sustainable power supply

The main circuit of a wind turbine is responsible for power generation via the generator and the transmission of power up to the infeed into the grid (fig. 4.5-9). High power outputs must be distributed and transmitted in the wind turbine safely and with as little loss as possible. This can be achieved by means of the LDM system from the SIVACON 8PS busbar trunking systems, which can be fitted both quickly and safely. It is ideally suited to the distribution and transmission of power within the main circuit for a current range of 800 A to 8,200 A.

The 3WL air circuit-breaker from the SENTRON portfolio protects the main circuit in the event of overload and short circuit. It can be fitted with various electronic trip units, which enable the tripping characteristic to be optimally adapted to the conditions required. The connection between the generator and the converter, which has to contend with variable frequencies, is protected by the externally controlled 3WL air circuit-breaker. The sensitive power semiconductors of the converter react sensitively to short circuit and overload. In the event of uncontrolled failure due to extreme circumstances, this can result in substantial damage and downtime for the entire wind turbine. A particularly fast protection device is required for protection. SITOR semiconductor fuses are the ideal solution for meeting these requirements.

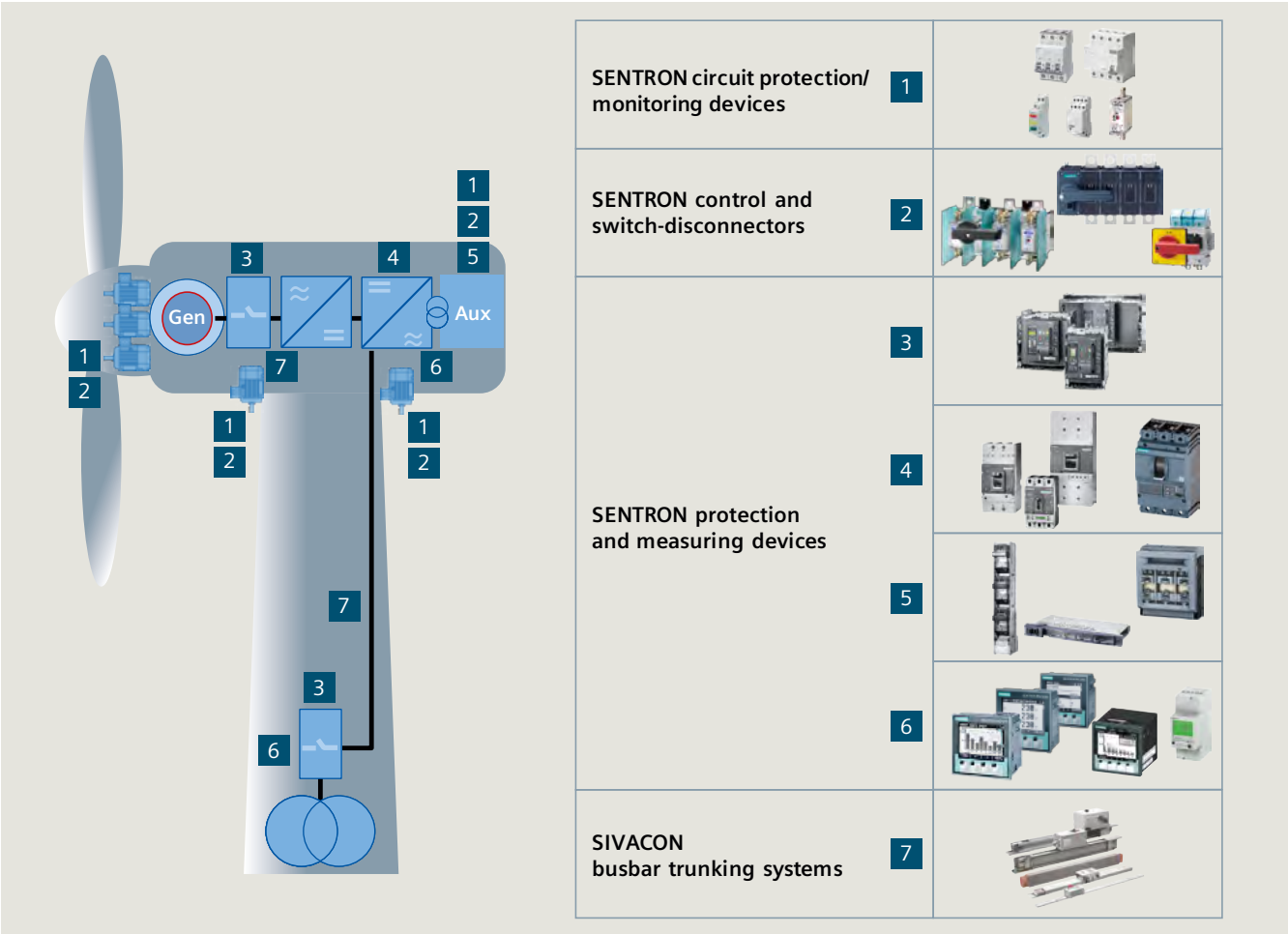

Fig. 4.5-9: Low-voltage power distribution devices in wind turbines (excerpt)

The equipment of vital functions of the wind turbine, such as pitch and yaw systems as well as ventilation or hydraulic systems, must be fitted with coordinated components to ensure effective protection against overvoltages, overloads, and short circuits. The 3V... molded-case circuit-breakers and the 3NP1 fuse-switch-disconnector protect the infeed system of the auxiliary circuits against short circuit and overload. Miniature circuit-breakers and fuse systems offer perfect protection for feeders and electrical equipment against short circuit and overload. Residual-current operated circuit-breakers protect against electrically ignited fires and offer personnel protection, e.g., in the case of insulation faults. UC-sensitive residual-current-operated circuit-breakers of types B and B+ guarantee maximum protection even when smooth DC residual currents arise. These can occur with frequency converters or defective switching network components. Further key functions are available thanks to an extensive range of accessories: remote tripping, remote reconnection, and remote querying of switching states.

Due to their exposed positions, wind turbines are at particular risk of being struck by lightning. In order to protect electrical equipment against lightning and overvoltages, Siemens offers a graded portfolio of surge arresters of types 1, 2, and 3.

Within the electric circuits of a wind turbine, measurement technology allows for the precise display and reliable monitoring of electrical variables. By recording changes in harmonic or current mean values, critical system states, and system component defects can be detected at an early stage, and subsequent damage, caused by fire for example, can be prevented. Thanks to their numerous communication options, the high-quality 7KM PAC measuring devices can be very easily integrated into higher-level communication systems of wind turbines or wind farm control rooms for further processing of the measured data.

Standard-compliant components for photovoltaic systems

Photovoltaic (PV) systems play an important role in CO_2 reduction and also make good business sense, not least in view of the feed-in tariff, guaranteed by local laws (e.g., the German Renewable Energy Sources Act – EEG). The construction and operation of photovoltaic systems is now integrated in standards such as IEC 60364-7-712 (VDE 0100-712) and IEC 60269-1/-6, as well as in the series of standards VDE 0126 (also comprising international standards such as EN 50521, EN 50548, and the series IEC 60904).

A central factor in the operation of a PV system that feeds into the local power grid is grid safety. In the event of a fault, the PV modules must be disconnected from the system at the infeed point. It is also necessary to prevent infeed to the grid in the event of grid and system faults. The 5TT3427 voltage and frequency relays meet the high requirements of the German application guide VDE AR-N 4105, and monitor the status of the grid in the case of in-plant generation systems. Violation of an upper or lower limit results in shutdown and disconnection of the generation system from the grid. Connection or automatic re-connection of the generation system to the grid only takes place when the grid frequency and the grid voltage have remained within their respective tolerance ranges without interruption for the duration of an adjustable time delay. Following shutdown due to a brief interruption, re-connection takes place when the grid frequency and grid voltage have remained within the tolerance range for 5 s without interruption.

The standards require that isolating arresters be provided on both sides of the inverter. These must feature suitable load-switching capacity on both the DC and AC sides.

It is vital that switch-off equipment (disconnection under load for maintenance work, for example) is provided. DC disconnectors designed with a suitable switching capacity for direct currents enable functions such as safe disconnection of the PV generator under load on all poles. According to the standards, isolating equipment must be provided on the AC side. The AC main switch must be able to safely disconnect the AC circuit under load on all poles. The use of switch-disconnectors with suitable AC switching capacity is recommended for this. Overvoltage protection devices for the DC and AC sides limit voltage spikes caused by lightning strikes or gridside overvoltages, and ensure the safety and uninterrupted availability of the system.

Siemens offers a high-quality, standard-compliant product range for the operation of PV systems (fig. 4.4-10, fig. 4.4-11), which guarantees a high level of operational safety and a long-term stability of yield. Whether for lightning strikes, overloads, or simply maintenance work – the comprehensive and coordinated range of SENTRON protection, switching, measuring, and monitoring devices offers all the components needed for the safe construction and operation of photovoltaic systems – from DC overvoltage protection to universal current sensitive RCCBs – from a single source.

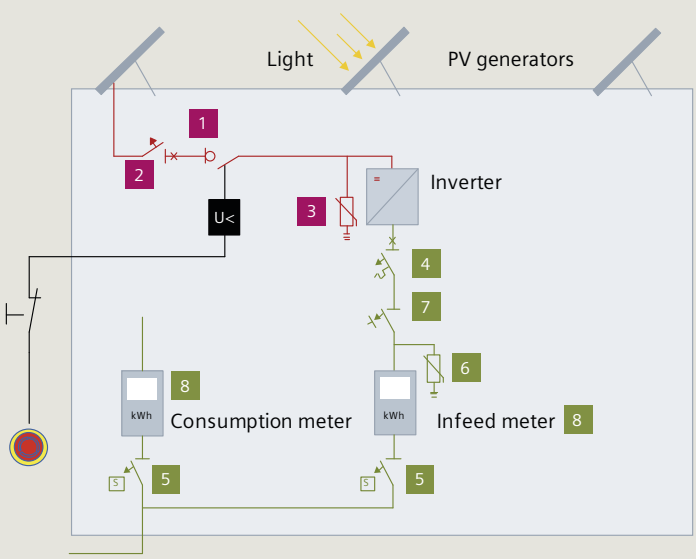

1 3VL DC disconnector
2 3NW PV cylinder fuse system
3 5SD7 DC overvoltage protection
4 5SL/5SY AC miniature circuit-breaker
5 5SP3 selective main miniature circuit-breaker
6 5SD7 AC overvoltage protection
7 5SM3 residual current circuit-breaker
8 7KT PAC1500 measuring device

- For systems consisting of more than three strings, protection against return currents (PV fuse) should be provided
- Overvoltage protection as well for the AC and DC
- MCCB with undervoltage trip for remote switching of the PV generator in case of danger
- Protection against short circuit and overload on the AC
- Calibrated measuring devices for settlement purposes

Fig. 4.4-10: Example for the setup of a PV system

Sustainable technologies for the electromobility of tomorrow

Electromobility places particular demands on the power grid and the power supply companies, but also on personal and fire protection at the charging point. The Siemens' comprehensive product portfolio offers components for all requirements in the charging infrastructure (fig. 4.4-11). The tried-and-tested SENTRON protection, switching and monitoring devices provide maximum safety during the charging operation. Matching components for the charging power, ambient conditions, and point of installation are required from the low-voltage power distribution range. We offer a range of products compliant with standards such as the series IEC 61851 (VDE 0122) and IEC 62196 (VDE 0623), which can be scaled in their functionality and performance class:

- Miniature circuit-breaker or SIRIUS circuit-breaker are used for reliable protection against overload and short circuit, as well as an Insta contactor or a SIRIUS power contactor for switching the voltage supply.
- For the conductive charging modes 1 to 4 according to IEC 61851-1 (VDE 0122-1), Siemens offers overcurrent protection devices and RCCBs.
- Surge arresters and measuring devices are recommended.
- For charging mode 4 (DC charging via rectifier), Siemens offers AC/DC sensitive RCCBs and overcurrent protection devices, as well as SITOR semiconductor fuses.
- The WB140A charging unit is a system-tested, CE-compliant unit for charging electric vehicles in charging mode 3 in accordance with IEC 61851-1 (VDE 0122-1) and IEC 62196-1 (VDE 0623-5-1) for indoor and outdoor use, e.g., carports, garages, workshops, underground parking garages, or multistorey parking decks.

Wind power applications	Photovoltaic applications	Electromobility
3WL/3VA/3VL circuit-breakers protect against short circuit and overload; 7KT/7KM measuring devices monitor energy flows.	Cylindrical fuses and LV HRC fuses ensure the safe operation of photovoltaic systems.	The WB140A charging unit is equipped with tried-and-tested SENTRON protection, switching and monitoring devices.

Fig. 4.4-11: SENTRON components for sustainable energy concepts (excerpt)

5 Transformers

5.1	**Introduction**	**277**
5.1.1	Overview	277
5.1.2	Ecodesign Directive from the European Commission	277
5.2	**Reliability and project performance**	**279**
5.3	**The resilience concept Pretact™: React in advance**	**282**
5.4	**Transformer loss evaluation**	**284**
5.5	**Power transformers**	**286**
5.5.1	Large power transformers	286
5.5.2	Medium power transformers	287
5.5.3	Small power transformers	287
5.6	**Reactors**	**288**
5.7	**Special transformers for industrial applications**	**289**
5.8	**Line Feeders**	**291**
5.9	**Phase-shifting transformers**	**292**
5.10	**HVDC transformers**	**293**
5.11	**Distribution transformers**	**294**
5.11.1	Liquid-immersed distribution transformers for European / U.S. / Canadian standard	294
5.11.2	Voltage regulators	298
5.11.3	GEAFOL cast-resin transformers	300
5.11.4	GEAFOL special transformers	306
5.12	**Traction transformers**	**316**
5.13	**Transformer lifecycle management**	**317**

1
2
3
4
5
6
7
8
9
10
11
12
?

5.1 Introduction

5.1.1 Overview

Whether in infrastructure, industry or households, transformers always play a key role in the reliable transmission and distribution of power. The construction, rated power, voltage level, and scope of the application are all crucial factors that determine the transformer's design. Siemens provides the right transformer for every need – from compact distribution transformers to large power transformers. Siemens offers a wide range of products, which are embedded in a complete power system from generation via transmission to distribution networks. Siemens Transformers covers all mainstream solutions, and fulfill specific requirements for UHV DC applications, low noise emission, and environmentally friendly products with alternative insulation liquids. The long-term reliability of a transformer begins with its initial high quality. State-of-the-art innovative transformer concepts and products ensure grid resilience and stability along the entire energy value chain.

Fig. 5.1-1 and table 5.1-1 offer an overview of how various transformers can be used in a network.

Global network
Siemens Transformers, one of the most innovative suppliers of power and distribution transformers, has 19 manufacturing facilities in 13 different countries. These include Brazil, China, Germany, India, Russia, Mexico, and the U.S.

Siemens meets the growing global demand for reliable and innovative transformers in a variety of ways: by further optimizing value-added steps in the worldwide network, by boosting productivity, and by using methods such as vertical integration.

With its Global Technology Centers, Siemens Transformers ensures that all transformers worldwide are being manufactured with European quality standards. Approximately 8,000 employees are working within Siemens Transformers up to date (2016).

For further information:
siemens.com/transformers

5.1.2 Ecodesign Directive from the European Commission

In July 2015, the European Commission implemented new guidelines for transformers produced and used in the European Economic Area (EEA). The Ecodesign Directive sets new environmental standards for products concerning energy consumption, with the aim of reducing energy loss and CO_2 emissions.

The regulations apply to both distribution and power transformers; however, they do not apply to units built for export outside the EEA and units already in operation. Siemens Transformers already met many of the new requirements, and in some instances even went beyond what was requested, as was the case for large power transformers. Nevertheless, the directive requires the use of high-quality electrical sheets as well as larger dimensions and weights, which has led to a cost increase for certain units.

As a transformer manufacturer, Siemens is requested to provide product information about rated power, load and no load losses, as well as the electrical power of the cooling system and weight measurements of main components.

A detailed description of the regulations for both power and distribution transformers can be found in the attached document, as well as a full list of transformers which are excluded from the directive.

New EU requirements for transformers:
siemens.com/pei-calculator

1
2
3
4
5
6
7
8
9
10
11
12
?

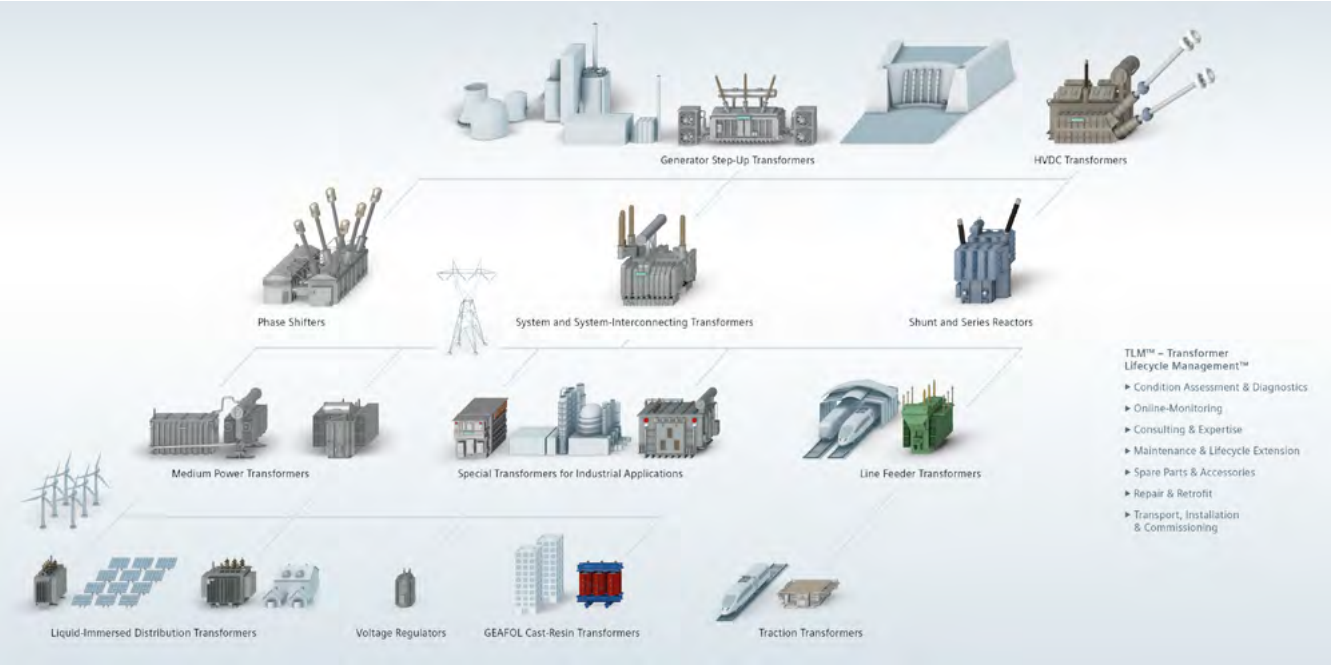

Fig. 5.1-1: Product range of Siemens Transformers

	Generator and system transformers	Above 2.5 MVA and up to more than 1,000 MVA, above 30 kV and up to 1,500 kV (system and system interconnecting transformers, with separate windings or auto-connected), with on-load tap changers or off-circuit tap changers, of 3-phase or 1-phase design
	Phase shifters	To control the amount of active power by changing the effective phase displacement
	Reactors	Liquid-immersed shunt and current-limiting reactors up to the highest rated powers Reactors for HVDC transmission systems
	HVDC transformers	Transformers and smoothing reactors for bulk power transmission systems up to 800 kV DC Transformers for DC coupling of different AC networks
	Cast-resin distribution and power trans-formers GEAFOL	100 kVA and up to more than 40 MVA, highest voltage for equipment up to 36 kV, of 3-phase or 1-phase design, GEAFOL-SL substations
	Liquid-immersed distribution transformers	10 to 2,500 kVA, highest voltage for equipment up to 36 kV, with copper or aluminum windings, hermetically sealed or with conservator of 3-phase or 1-phase design Pole-mounted transformers and distribution transformers acc. to IEC and CS/IEEE with amorphous cores
	Special transformers for industry	Electric arc furnace transformers Electric arc furnace series reactors DC electric arc furnace transformers Rectifier transformers Converter transformers for large drives
	Traction transformers	Traction transformers mounted on rolling stock
	Transformer lifecycle management	Condition assessment and diagnostics Online monitoring Consulting and expertise Maintenance and lifecycle extension Spare parts and accessories Repair and retrofit Transport, installation and comissioning

Table 5.1-1: Product range of Siemens Transformers

5.2 Reliability and project performance

The quality strategy in the transformer business is based on the three cornerstones of product, people and process quality (fig. 5.2-1). The objective is to achieve the greatest customer satisfaction with cost-efficient processes. This is only possible if all employees involved in the processes have a profound understanding of the customer needs and specific requirements in the transformer business.

The strategy is implemented in the form of mandatory elements. These elements cover product and service quality, which is visible to customers; personnel quality, which is achieved by training and ongoing education; and process quality in all processes used. Business and process-specific indicators must be used to ensure that each single element is measurable and transparent.

Nine mandatory elements are defined:

- Customer integration
- Embedded quality in processes and projects
- Consequent supplier management
- Business-driven quality planning
- Focused quality reporting
- Qualification of employees on quality issues
- Continuous improvement
- Management commitment
- Control and support role of quality manager.

Elements of quality (mandatory elements)

Customer integration

Customer integration depends on the consistent use of:

- Analysis tools for customer requirements and market studies
- Analysis of customer satisfaction
- Professional management of feedback from and to the customer
- Complaint management.

Customer requirements need to be precisely defined in a specification, and the specification must be continuously updated throughout the definition phase of a transformer project. The actual requirements must also be available to all responsible employees.

Rapid feedback loops – in both directions – are essential in order to increase customer trust and satisfaction.

Siemens resolves customer complaints to the customer's satisfaction in a timely manner through its complaint management system.

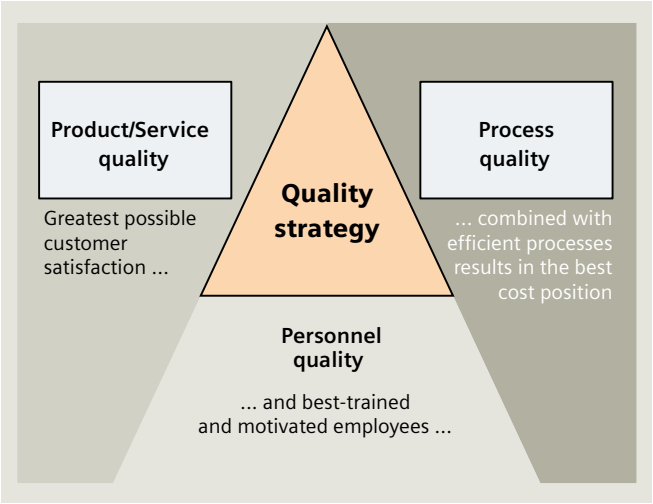

Fig. 5.2-1: Cornerstones of quality strategy

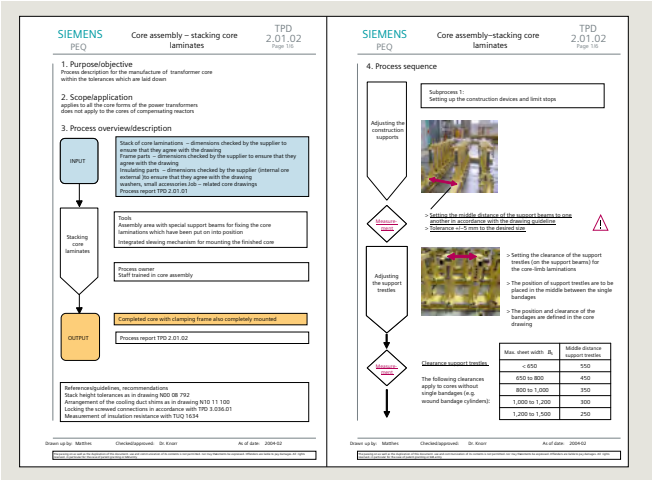

Fig. 5.2-2: Example of standardized work instruction

Embedded quality in processes and projects

The quality of the processes used to produce a product has a significant impact on the quality of the product that is actually produced. Process discipline and process stability can be achieved by a high degree of process standardization. All processes should be standardized for all employees, based on simple procedures. If this condition is met, it is possible to implement clearly defined work instructions (fig. 5.2-2).

1
2
3
4
5
6
7
8
9
10
11
12
?

Quality Gates are placed at points in the process at which quality-relevant decisions are necessary. The following Quality Gates are mandatory for the power transformer business.

- Bid approval
- Order clarified
- Approval of electrical design
- Acceptance test active part
- Mechanical acceptance test
- Dispatch approval
- Project closure / lessons learned.

Each Quality Gates comprises:
- a clear definition of participants
- a quality-gate-specific questionnaire
- results (traffic light and list of measures).

If the result is not acceptable, the process has to be stopped until all requirements are fulfilled, and the management has to be informed.

Supplier management
The quality of the product depends not only on the quality of the own processes, but also on that of the suppliers. Problems and costs caused by inadequate supplier quality can only be reduced by a systematic supplier management process that includes:
- Selection
- Assessment
- Classification
- Development
- Phasing out of suppliers, as well as the support process "Supplier Qualification".

A further condition for a high level of supplier quality is close cooperation with the suppliers. Joint development of requirements for suppliers and processes leads to continuous improvements in quality. In this context, supplier know-how can also be used to create innovations. This aspect of the relationship with suppliers is becoming more and more important, especially in the transformer business.

Business-driven quality planning
Planning quality means analyzing possible future scenarios, evaluating anticipated risks, and defining preventive measures to mitigate these potential risks. The essential method for the evaluation and mitigation of technical risks is the "Matrix of Complexity". It is crucial that both current and future critical business factors are considered in planning. That means that quality is based on business-driven planning and specific objectives, activities, and quantitative indicators.

Focused quality reporting
Reporting is based on:
- Focused key performance indicators such as non-conformance costs, external failure rate, internal failure rate, and on-time delivery
- Concrete quality incidents
- Root cause analysis of quality problems including definition of corrective and preventive measures.

For customers, the reliability of transformers is of special importance. ANSI C57.117 has made an attempt to define failures. Based on this definition, statistics on in-service failures and reliability values can be derived. An example for power transformers appears in table 5.2-1.

ANSI Standard C57.117, 1986,
Guide for Reporting Failure Data for Power Transformers and Shunt Reactors on Electric Utility Power Systems.

EM TR in-service failure statistic 2006 – 2015 for power transformers

based on ANSI C 57.117

	EM TR	Plant 1	Plant 2	Plant 3	Plant 4	Plant 5	Plant 6*	Plant 7	Plant 8	Plant 9	Plant 10	Plant 11**	Plant 12
N	12,847	955	617	914	793	1,489	184	2,063	781	1,862	1,035	675	1,505
SY	62,247	4,663	2,728	5,684	7,304	4,180	601	10,353	4,158	8,009	5,206	2,292	7,069
n_F	85	4	5	7	8	6	1	8	10	9	10	2	15
FRe (%)	0.14	0.08	0.18	0.12	0.11	0.14	0.17	0,08	0.24	0.11	0.19	0.09	0.21
MTBF (yrs)	732	1,241	546	812	913	697	601	1,294	416	0.09	521	1,146	471

* Plant 6: 2008 – 2015; ** Plant 11: 2009 – 2015

N = No. of units in service
SY = No. of service years
n_F = No. of units failed
FRe (%) = Failure rate = $n_F \times 100/SY$
MTBF (yrs) = Mean time between failures = 100/FRe

FRe ≤ 0.5 %	excellent
0.5 % < FRe ≤ 1.0 %	good
1.0 % < FRe ≤ 1.5 %	satisfactory
1.5 % < FRe ≤ 2.0 %	acceptable
FRe > 2.0 %	not acceptable

Table 5.2-1: External failure rates of Siemens Transformers

1
2
3
4
5
6
7
8
9
10
11
12

Qualification of employees on quality issues

People are the decisive factor influencing quality. Therefore, all employees involved in the processes must have the skills and abilities appropriate for the quality aspects of the process steps. Any qualification measures that may be necessary must be determined on the basis of a careful analysis of existing deficits.

Continuous improvement

Because "there is nothing that cannot be improved", continuous improvement must be an integral part in all processes. The objective is to continue optimizing each process step. This is also the purpose of improvement teams. Appropriate coaching of these teams should make it possible to reach almost all employees. Methods like Lean, Kaizen, 5S, and methods and tools from Six Sigma, e.g. DMAIC circle, FMEA, IPO are helpful in supporting this continuous improvement process (fig. 5.2-3).

Management commitment

Every manager in a company also bears responsibility for quality. Thus, each manager's actions must be characterized by a high level of quality awareness. The level of commitment shown by all levels of management in the event of quality problems, the establishment of quality demands, and the creation of targeted quality controls in day-to-day work together produce a culture in which there is a high level of quality.

Control and support role of the quality manager

The role of the quality manager is of fundamental importance for well-running processes. The quality manager combines a supporting role with that of a neutral controller. Quality management must be directly involved in processes and projects. The independence of the quality department and individual quality managers in the processes and projects must be guaranteed and agreed by top management.

Conclusion

The quality of a transformer is based on the quality of all processes that are necessary – from project acquisition to project closing. The quality of the processes depends essentially on people. Only well-trained and motivated employees are able to guarantee that a process will be performed with a high degree of quality.

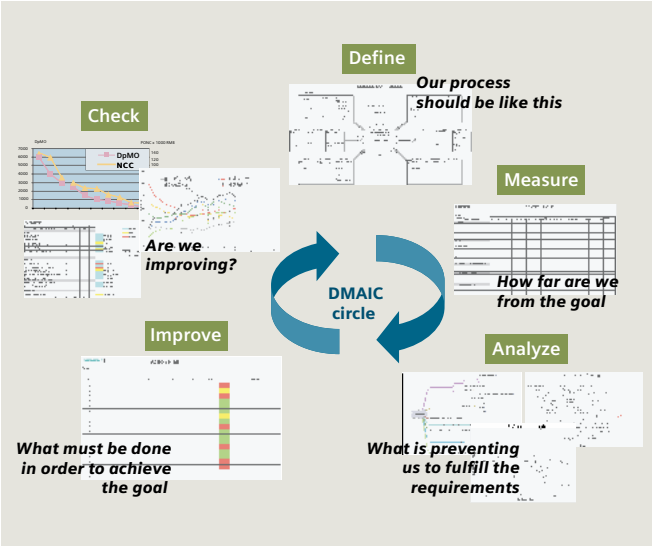

Fig. 5.2-3: DMAIC circle

1
2
3
4
5
6
7
8
9
10
11
12
?

5.3 The resilience concept Pretact™: React in advance

Keeping grids resilient – at any time
Grid resilience is a highly discussed topic today. Several major outages have taken place around the globe over the last decade, prompting many grid operators to look for viable solutions to ensure the stability of their grids.

Reasons for power outages are manifold, ranging from operational issues to forced physical impacts or natural disasters. The costs of such an outage for grid operators can be tremendous, and many are looking to ensure peace of mind.

Siemens Transformers offers its customers a wide-ranging portfolio for grid resilience wherever needed. Siemens' new design concept, named Pretact™, is made up of a three-pillar plan including modular architecture and a comprehensive plug-and-play concept to ensure grid resilience along the energy value chain for both power and distribution transformers.

Pretact™ is designed to prevent transformers from failures, protect equipment from physical harm, and even enable customers to react quickly in cases of emergency where rapid replacement needs to be carried out.

PREVENT
The risk of an operational outage can be reduced by a range of effective preventive measures for both distribution and power transformers offered by Siemens Transformers. Some selected examples are as follows:

- A wide range of Transformer Lifecyle Management (TLM) services offered for transformers to keep the equipment healthy, especially for power transformers
- The use of FITformer and voltage regulators to help regulate low- and medium-voltage grids and remain within the permissible voltage range, increasing the network stability
- High quality design of distribution transformers to cope with switching stress loads of wind power generation
- Use of sophisticated and state-of-the-art design tools.

PROTECT
Protective measures can safeguard against forced outages caused by exposure to the natural environment or human impacts, as well as increasing the overall safety of the transformer, i.e.:

- Alternative insulation fluids, which reduce the risk of fire or explosion, can be used in power transformers as well as in liquid-immersed distribution transformers
- GIC-safe power transformers which protect assets against sun storms
- Bullet-resistant power transformers and tank-rupture-safe design
- Flame-resistant cast-resin transformers
- Radiation-reduced systems for liquid-immersed distribution transformers and cast-resin transformers to protect the surrounding environment (EMC).

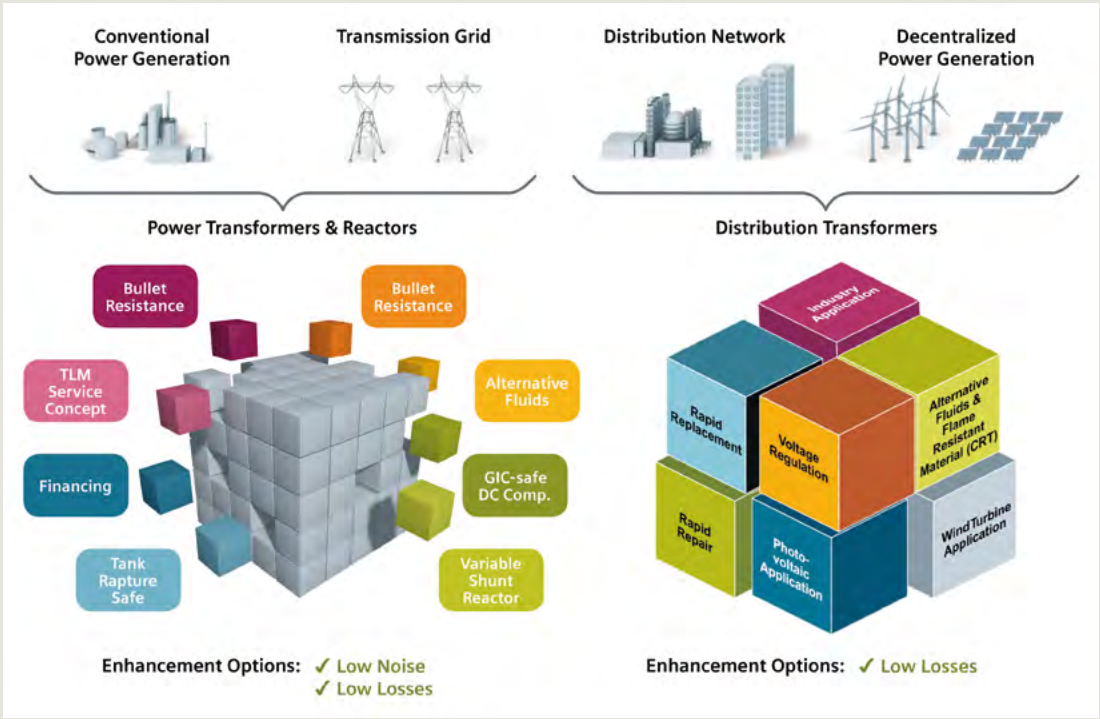

Fig. 5.3-1: Resilience portfolio for power and distribution transformers

1
2
3
4
5
6
7
8
9
10
11
12
?

REACT

Siemens Transformers offers reactive measures in the case of an unavoidable power outage, enabling operators to react as quickly as possible, and significantly reduce outage time, i.e.:

- Resilience units with plug-in connectors and bushings for easy and rapid transport and installation in the case of a power outage – until recently, reconnection could take several days or even weeks, but resilience transformers can be energized within a few hours
- Individual winding exchange in cast-resin transformers for rapid replacement.

Pretact™ offers our customers tailor-made solutions with optimal flexibility for preventative, protective and replacement strategies.

For more information about Pretact™ visit our website:

siemens.com/transformer-resilience

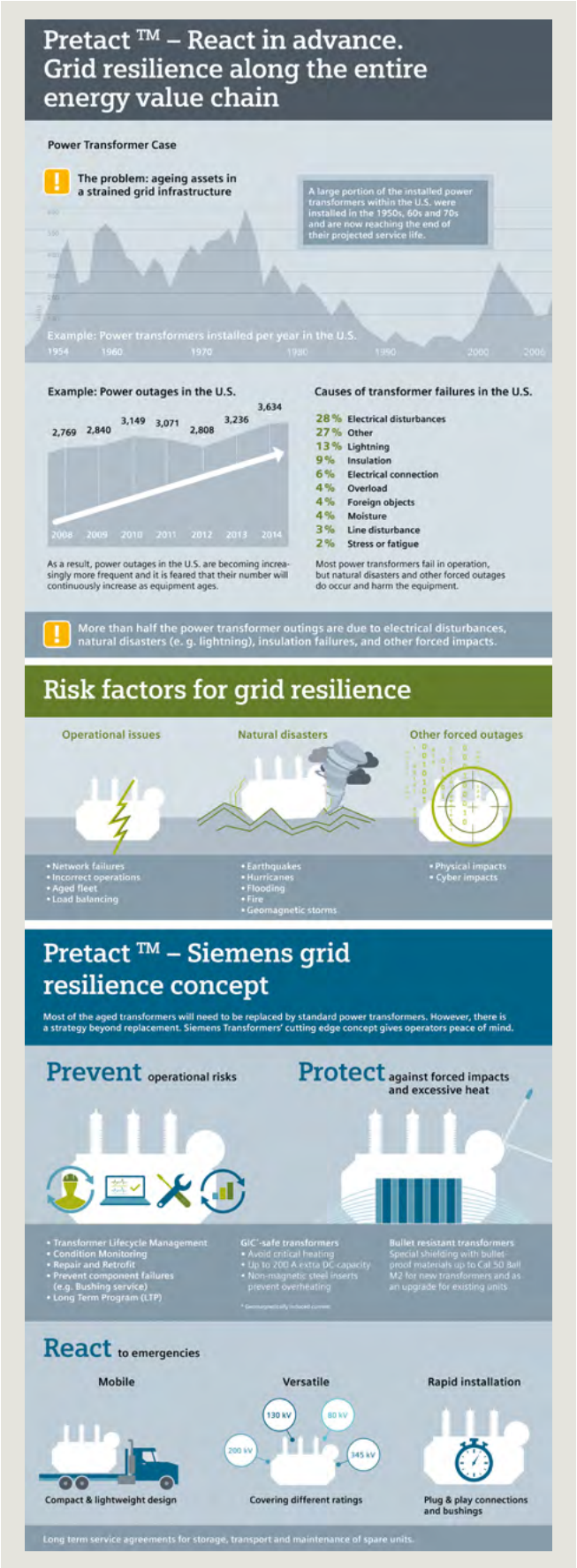

Fig. 5.3-2: U.S. reference case

1
2
3
4
5
6
7
8
9
10
11
12
?

5.4 Transformer loss evaluation

The continuous cost increase of electrical energy has made it almost mandatory for power transformer customers to carefully evaluate the inherent losses of their electrical equipment. For distribution and power transformers, which operate continuously and most frequently in loaded condition, loss evaluation is especially important. As an example, the added cost of loss-optimized transformers can in most cases be recovered via savings in energy use in less than three years.

Low-loss transformers use high-grade core conductivity conductors and efficient magnetic materials for improved stray field control. Therefore, low-loss transformers are intially more expensive than low-cost transformers. By stipulating loss evaluation figures in the transformer inquiry, the manufacturer receives the necessary incentive to provide a loss-optimized transformer rather than the low-cost model. Detailed loss evaluation methods for transformers have been developed, and are described accurately in the literature. These methods take the project-specific evaluation factors of a given customer into account.

A simplified method for a quick evaluation of different quoted transformer losses makes the following assumptions:

- The transformers are operated continuously
- The transformers operate at partial load, but this partial load is constant
- Additional cost and inflation factors are not considered
- Demand charges are based on 100 % load.

The total cost of owning and operating a transformer for one year is thus defined as follows:

- Capital cost (C_C), taking into account the purchase price (C_p), the interest rate (p), and the depreciation period (n)
- Cost of no-load loss (C_{P0}) based on the no-load loss (P_0) and energy cost (C_e)
- Cost of load loss (C_{Pk}) based on the load loss (P_k), the equivalent annual load factor (a), and energy cost (C_e)
- Cost resulting from demand charges (C_d) based on the amount set by the utility and the total kW of connected load (fig. 5.4-1).

The following examples show the difference between a low-cost transformer and a loss-optimized transformer (fig. 5.4-2 and table 5.4-1, see next page).

Capital cost

taking into account the purchase price C_p, the interest rate p, and the depreciation period n

$$C_c = C_p \cdot r/100 \quad \text{[amount/year]}$$

C_p = purchase price

$r = p \cdot q^n/(q^n - 1)$ = depreciation factor
$q = p/100 + 1$ = interest factor
p = interest rate in % p.a
n = depreciation period in years

Cost of no-load loss

based on the no-load loss P_0, and energy cost C_e

$$C_{P0} = C_e \cdot 8{,}760\ h/year \cdot P_0$$

C_e = energy charges [amount/kWh]
P_0 = no-load loss [kW]

Cost of load loss

based on the load loss P_k, the equivalent anual load factor a, and energy cost C_e

$$C_{Pk} = C_e \cdot 8{,}760\ h/year\ a^2\ P_k$$

a = constant opperation load/rated load
P_k = copper loss [kW]

Cost resulting from demand charges

based on the no-load loss P_0, and energy cost C_e

$$C_D = C_d\ (P_0 + P_k)$$

C_d = demand charges [amount/(kW · year)]

Fig. 5.4-1: Calculation of the individual operation cost of a transformer in one year

Example: Distribution transformer

Depreciation period	n = 10 years
Interest rate	p = 2 % p.a.
Depreciation factor	r = 11.13
Energy charge	C_e = 0.10 € / kWh
Demand charge	C_d = 0.05 € / (kWh · year)
Equivalent annual load factor	a = 0.3

Fig. 5.4-2: Example for cost saving with optimized distribution transformer

Remarks		Standard D0/Dk	EcoDesign A0/Ck	Loss difference to Standard D0/Dk	EcoDesign 2 A0-10/Ak	Loss difference to Standard D0/Dk	
Transformer rating [kVA]	SN	630	630		630		
No-load losses [W]	P0	1,030	600	430	540	490	Loss difference
Load losses [W]	PK	8,400	6,500	1,900	4,600	3,800	Loss difference
Transformer price [€]	A	5,200	6,300		9,000		
Average load [%]	a	30%	30%		30%		
Operation time [h/year]	TB	8,760	8,760		8,760		
Yearly interest [%/year]	p	2%	2%		2%		
Depreciation period commercial [years]	n	10	10		10		
Energy cost [cents/kWh]	Ce	10	10		10		
Increase in energy cost [cents/(kWh × year)]	Cd	005	005		005		
Period under review [years]	tB	30	30		30		
Calculation							
Energy cost [€/kWh]	kS	01.075	01.075		01.075		
Interest factor	q	102	102		102		
Depreciation factor	r	0.111326528	0.111326528		0.111326528		
Capital cost [€/year]	kA	579	701		1,002		
Cost for no-load losses [€/year]	KP0	970	565	3,7668	509	4,2924	No-load losses kWh/year
Cost for load losses [€/year]	KPk	712	551	1,4980	390	2,9959	Load losses kWh/year
Total investment [€]	KI	5,789	7,014	1.579	10,019	2.186	Loss savings MWh/ Period under review
Total costs for losses [€/year]	KV	1,682	1,116	0.576	898	0.576	Factor t/MWh
Higher investment [€]	ΔKI	Reference Trafo	1,225		4,230		
Saved cost for lower losses [€/year]	ΔKV	Reference Trafo	-566	910	-783	1.259	To CO_2 savings during period under review
Period for total amortization [years]	x	Reference Trafo	2.2		5.4		
EcoDesign A0/Ck related to D0/Dk: EcoDesign A0/Ck amortized after 2.2 years CO_2-Reduction: 91 tons					EcoDesign 2 A0-10/Ak related to D0/Dk: EcoDesign 2 A0-10/Ak amortized after 5.4 years CO_2-Reduction: 125.9 tons		

Table 5.4-1: Example for cost saving with optimized distribution transformer

5.5 Power transformers

5.5.1 Large power transformers

In the power range above 250 MVA, generator and system interconnecting transformers with de-energized or on-load tap changers are recommended. Depending on the on-site requirements, they can be designed as multiwinding transformers or autotransformers, in 3-phase or 1-phase units. Even with ratings of more than 1,000 MVA and voltages up to 1,200 kV (800 kV), the feasibility limits have not yet been reached. We manufacture these units according to IEC 60076 as well as other international and national standards (e.g., ANSI/IEEE), (fig. 5.5-1).

Generator step-up transformers

Generator step-up (GSU) transformers are essential elements in the power supply chain. They are responsible for the safe and reliable transmission of generated electricity from the power plant to the supplier. GSU units transform the voltage from the generator voltage level up to the transmission voltage level. Such transformers are usually YNd-connected in order to handle load unbalance. Safety, reliability and efficiency of the GSU transformers are main requirements for the power plant operator.

Depending on customer requirements, GSU transformer can be manufactured with different key features:

Key features	Benefits
Low-noise GSU	low-noise solution below 70 dB
Low-loss GSU	increased power plant efficiency, increased reliability, short payback period (5 years)
Ester GSU	Fire-safe and environmentally friendly transformer
Mobile resiliency GSU	Fast solution in case of transformer outage (1 day for installation of mobile resiliency unit)

Step-down transformers

Step-down transformers transform the voltage down from the transmission voltage level to a required distribution voltage level.

System interconnecting transformers

Power transformers are a core component of power transmission systems which are designed to deliver power to the consumers efficiently and reliably.

System interconnecting transformers provide connection between different voltage systems, so that active as well as reactive power can be exchanged between the systems.

For that purpose, multi-winding network transformers or autotransformers are used, depending on customer requirements and their transmission system characteristics.

Every transformer is designed according to basic transformer parameters, but many additional key features can be introduced into the transformer design, amongst which are:

- Low-loss high efficiency transformer
- Low-noise transformers
- Alternative insulation liquids
- Grid resiliency solutions
- Mobile transformers
- Transformers with heat recovery systems.

Main specification data	Limits
• Standard • Installation – indoor/outdoor • Max. ambient air temperature • Rated frequency f • Vector group • Rated power S • Primary rated voltage UrHV • Tapping range/taps • Voltage regulation • Secondary rated voltage UrLV • Impedance uk at Sr and Ur • Max. sound power level LWA • Insulation level HV-Ph – Um/AC/LI • Insulation level HV-N – Um/AC/LI • Insulation level LV-Ph – Um/AC/LI • Type of cooling • HV connection technique • LV connection technique • Transportation medium • Losses • Core type • Winding type • TLM spare units	• Dimensions • Weight • Transport

Fig. 5.5-1: Large power transformer

1
2
3
4
5
6
7
8
9
10
11
12
?

5.5.2 Medium power transformers

Medium power transformers with a power range from 30 to 250 MVA and a voltage of over 72.5 kV are used as network and generator step-up transformers (fig. 5.5-2).

Specific items

- Transformer design according to national and international standards (IEC/ANSI) with or without voltage regulation
- 3-phase or 1-phase
- Tank-attached radiators or separate radiator banks.

Main specification data
• Number of systems (HV, LV, TV) • Voltage and MVA rating • Regulation range and type • Vector group • Frequency • Losses or capitalization • Impedances • Type of cooling • Connection systems (bushing, cable) • Noise requirements (no-load, load and/or total noise) • Special insulation fluid • Application of high temperature/extra small size operation.

Fig. 5.5-2: Medium power transformer with natural-oil-based insulation fluid

5.5.3 Small power transformers

Small power transformers are distribution transformers from 5 to 30 MVA with a maximum service voltage of 145 kV. They are used as network transformers in distribution networks (fig. 5.5-3).

This type of transformer is normally a 3-phase application and designed according to national and international standards. The low-voltage windings should be designed as foil or layer windings. The high-voltage windings should use layer or disc execution, including transposed conductors. Normally, the cooling type is ONAN (oil-natural, air-natural) or ONAF (oil-natural, air-forced). The tapping can be designed with off-circuit or on-load tap changers (OCTC or OLTC).

Main specification data
• Voltage and MVA rating • Frequency • Regulation range and type • Vector group • Losses or capitalization • Impedances • Noise requirements • Connection systems (bushing, cable) • Weight limits • Dimensions • Information about the place of installation • Special insulation fluid • Application of high temperature/extra small size operation • Type of cooling.

Fig. 5.5-3: Small power transformer

1
2
3
4
5
6
7
8
9
10
11
12
?

5.6 Reactors

In AC networks, shunt reactors and series reactors are widely used in the system to limit the overvoltage or to limit the short-circuit current. With more high-voltage overhead lines with long transmission distance and increasing network capacity, both types of reactors play an important role in the modern network system.

Made for all requirements

Oil-filled reactors are manufactured in two versions:

- With an iron core divided by air gaps
- Without an iron core, with a magnetic return circuit.

Oil-filled reactors offer individual solutions: They satisfy all the specified requirements regarding voltage, rating, type of operation, low noise, low loss, and type of cooling, as well as transportation and installation.

The windings, insulation tank monitoring devices, and connection method are practically the same as those found in the construction of transformers.

Shunt reactors

For extra-high-voltage (EHV) transmission lines, due to the long distance, the space between the overhead line and the ground naturally forms a capacitor parallel to the transmission line, which causes an increase of voltage along the distance. Depending on the distance, the profile of the line, and the power being transmitted, a shunt reactor is necessary either at the line terminals or in the middle. An liquid-immersed shunt reactor is a solution. The advanced design and production technology will ensure the product has a low loss and a low noise level.

Shunt reactors also can be built as adjustable shunt reactors. This offers the possibility of fine tuning the system voltage, and also the reduction of high-voltage equipment by substitution of several unregulated reactors by a regulated one.

Series reactors

When the network becomes larger, sometimes the short-circuit current on a transmission line will exceed the short-circuit current rating of the equipment. Upgrading of system voltage, upgrading of equipment rating, or employing high-impedance transformers are far more expensive than installing liquid-immersed series reactors in the line. The liquid-immersed design can also significantly save space in the substation.

Fig. 5.6-1: Reactor

Specification

Typically, 3-phase or 1-phase reactors should be considered first. Apart from the insulation level of the reactor, the vector group, overall loss level, noise level, and temperature rise should be considered as main data for the shunt reactor.

Although the above data are also necessary for series reactors, the rated current, impedance, and thermal / dynamic stability current should also be specified.

5.7 Special transformers for industrial applications

A number of industrial applications require specific high current industrial application transformers due to the usage of power (current) as a major resource for production. Electric arc furnaces (EAF), ladle furnaces (LF), and high-current rectifiers need a specific design to supply the necessary power at a low-voltage level. These transformer types, as well as transformers with direct connection to a rectifier, are called special-purpose or industrial transformers. Their design is tailor-made for high-current solutions in industrial applications.

Electric arc furnace transformers

EAF and LF transformers are required for many different furnace processes and applications. They are built for steel furnaces, ladle furnaces, and ferroalloy furnaces, and are similar to short or submerged arc furnace transformers (fig. 5.7-1).

EAF transformers operate under very severe conditions with regard to frequent overcurrents and overvoltages generated by short circuit in the furnace and the operation of the HV circuit-breaker. The loading is cyclic. For long-arc steel furnace operation, additional series reactance is normally required to stabilize the arc and optimize the operation of the furnace application process.

Specific items

EAF transformers are rigidly designed to withstand repeated short-circuit conditions and high thermal stress, and to be protected against operational overvoltages resulting from the arc processes. The Siemens EAF reactors are built as 3-phase type with an iron core, with or without magnetic return circuits.

EAF transformer design options

- 1-phase or 3-phase types
- Direct or indirect regulation or booster
- Oil or vacuum type OLTC (also reactor type OLTC)
- On-load or no-load tap changer (OLTC/NLTC)
- Built-in reactor or reactor in own tank for long arc stability
- Secondary bushing arrangements and designs
- Air- or water-cooled secondary bushing arrangements and designs
- Internal secondary phase closure (internal delta)
- Special magnetic shield design for each project
- OF- or OD-cooling.

Fig. 5.7-1: Electric arc furnace transformer

EAF reactor design options

- Built as a 3-phase type with an iron core including air gaps
- As a stand-alone unit or incorporated into the tank of the EAF transformer itself
- On-load or off-circuit tap changer
- Core with or without magnetic return limbs.

Main specification data
• Rated power, frequency and rated voltage • Regulation range and maximum secondary current • Impedance and vector group • Type of cooling and temperature of the cooling medium • Series reactor and regulation range and type (OLTC/NLTC) • Preferred LV connection.

DC electric arc furnace transformers

Direct-current electric arc furnace (DC EAF) transformers are required for many different furnace processes and applications. They are built for steel furnaces with a thyristor rectifier. DC EAF transformers operate under very severe conditions, like rectifier transformers in general, but using rectifier transformers for furnace operation. The loading is cyclic.

1
2
3
4
5
6
7
8
9
10
11
12
?

Rectifier transformers

Rectifier transformers are combined with a diode or thyristor rectifier. The applications range from very large aluminum electrolysis to various medium-size operations. The transformers may have a built-in or a separate voltage regulation unit. Due to a large variety of applications, they can have various designs up to a combination of voltage regulation, rectifier transformers in double-stack configuration, phase-shifting, interphase reactors, saturable reactors (transductors), and filter-winding (fig. 5.7-2).

Specific items

Thyristor rectifiers often require voltage regulation with a no-load tap changer, if any. A diode rectifier will, in comparison, have a longer range and a higher number of small voltage steps than an on-load tap changer. The fine tuning can be done with saturable reactors. Additionally, an auto-connected regulating transformer can be integrated in the same tank (depending on transport and site limitations).

Design options

- Direct or indirect voltage regulation
- Double-star or double-bridge connection
- Double tier design and/or keel line arrangement
- Double tier with or without intermediate yoke
- On-load or off-circuit tap changer
- Filter connection or filter winding
- Additional phase-shifting windings for 12-pulse or higher systems
- Interphase reactor, saturable reactors
- Air-cooled secondary bushing arrangements and designs
- Numerous different vector groups and phase shifts.

Main specification data
• Rated power, frequency and rated voltage • Regulation range and number of steps • Impedance and vector group, shift angle • Type of cooling and temperature of the cooling medium • Bridge or interphase connection (double star) • Number of pulses of the transformer and system • Harmonics spectrum or control angle of the rectifier • Secondary bushing arrangement • Control angle of the rectifier • Preferred LV connection.

Fig. 5.7-2: Rectifier transformer for an aluminum plant

Converter transformers

Converter transformers are used for large drive application, static voltage compensation (SVC), and static frequency change (SFC).

Specific items

Converter transformers are mostly built as double tier, with up to six secondary windings, allowing up to 36-pulse rectifier operation. Such transformers often have an additional winding as a filter to take out harmonics and electrostatic shields between HV and LV winding systems. Different vector groups and phase shifts are possible. ATEX-certified designs are possible for hazardous areas (e.g., in the O&G business).

Main specification data
• Rated power, rated frequency and rated voltage • Impedance and vector group, shift angle • Type of cooling and temperature of the cooling medium • Number of pulses of the transformer and system • Harmonics spectrum or control angle of the rectifier • Control angle of the rectifier.

5.8 Line Feeders

This kind of transformer connects the power network and the power supply for trains. Transformers must ensure continuous operation under heavy overload, and withstand frequent short circuits to assure uninterrupted train operation.

Transformer types

- Single-phase traction feeder transformers with one or two secondary windings
- Autotransformers
- Scott-connected transformers.

Main specification data
• Rated power, frequency and rated voltage • Impedance and vector group • Overload conditions.

Design options

- Direct connection between transmission network and railway overhead contact line.
- Suitable to operate at different frequencies, e.g., 60 Hz, 50 Hz, 16.67 Hz
- Thyristor or diode rectifier
- On-load or no-load tap changer (OLTC / NLTC)
- Secondary bushing arrangements and designs
- Air cooler
- Filter winding
- Granted lifetime operation for either standard loading cycles (EN 50329) or fully customized options
- Non-mineral insulation to enhance fire resistance
- Fully integrated monitoring system.

5.9 Phase-shifting transformers

A phase-shifting transformer is a device for controlling the power flow through specific lines in a complex power transmission network (fig. 5.9-1). The basic function of a phase-shifting transformer is to change the effective phase displacement between the input voltage and the output voltage of a transmission line, thus controlling the amount of active power that can flow in the line.

Fig. 5.9-1: Phase-shifting transformer

Guidance on necessary information

Beside the general information for transformers, the following specific data are of interest:

- Rated MVA
  The apparent power at rated voltage for which the phase-shifting transformer is designed.
- Rated voltage
  The phase-to-phase voltage to which operating and performance characteristics are referred to – at no load.
- Rated phase angle
  Phase angle achieved when the phase-shifting transformer is operated under no-load condition, or if stated at full load, at which power factor.
- Phase shift direction
  In one or both directions. Changeover from and to under load or no-load condition.
- Tap positions
  Minimum and/or maximum number of tap positions.
- Impedance
  Rated impedance at rated voltage, rated MVA and zero phase shift connection as well as permissible change in impedance with voltage and phase angle regulation.
- System short-circuit capability
  When the system short-circuit level is critical to the design of phase-shifting transformers, the maximum short-circuit fault level shall be specified.
- BIL
  Basic impulse level (BIL) of source, load and neutral terminals.
- Special design tests
  Besides the standard lightning impulse tests at all terminals, it has to be considered that the lightning impulse might occur simultaneously at the source and the load terminal in case of closed bypass circuit-breaker. If such a condition is likely to appear during normal operation, a BIL test with source and load terminals connected might be useful to ensure that the phase-shifting transformer can withstand the stresses of lightning strokes in this situation.
- Special overload condition
  The required overload condition and the kind of operation (advance or retard phase angle) should be clearly stated. Especially for the retard phase angle operation, the overload requirements may greatly influence the cost of the phase-shifting transformer.
- Operation of phase-shifting transformer
  Operation with other phase-shifting transformers in parallel or series.
- Single or dual-tank design
  In most cases, a dual-core design requires a dual-tank design as well.
- Symmetric or non-symmetric type
  Symmetric means that under a no-load condition the voltage magnitude at the load side is equal to that of the source side. For non-symmetric phase-shifting transformers, the permissible variation in percent of rated voltage at maximum phase angle must be stated.
- Quadrature or non-quadrature type
  A quadrature-type phase-shifting transformer is a unit where the boost voltage, which creates the phase shift between source and load terminals, is perpendicular to the line voltage on one terminal.
- Internal varistors
  It has to be clarified whether internal metal-oxide varistors are allowed or not.
  Siemens as a global player has decades of experience in the field of phase shifters, and our key experts can support system operators in their decision from the very beginning.
- Voltage regulation (on-load tap-changer).

5.10 HVDC transformers

HVDC transformers are key components of HVDC stations. HVDC converter and inverter stations terminate long-distance DC transmission lines or DC sea cables. This type of transformer provides the interface between AC grids and high-power rectifiers, and are used to control the load flow over the DC transmission lines. These actors adapt the AC grid voltage to an adequate level which is suitable for feeding the valve system of DC converter and inverter.

Design options

The design concept of HVDC transformers is mainly influenced by the rated voltage, rated power, and transportation requirements like dimensions, weight and mode of transportation. Many large power HVDC converter stations are located in rural areas of low infrastructure. Frequently, special geometrical profiles have to be fulfilled in order to move such transformers by railway.

Typically, HVDC transformers are single phase units containing 2 winding limbs. This concept can include either 2 parallel valve windings (two for delta or two for wye system, fig. 5.10-1) or two different valve windings (one for delta and one for wye, fig. 5.10-2). In order to reduce the total transportation height, frequently the core assembly includes 2 return limbs. Due to redundancy requirements in HVDC stations, 3-phase units are quite uncommon.

The valve windings are exposed to AC and DC dielectric stress, and therefore a special insulation assembly is necessary. Furthermore, special lead systems connecting the turrets and windings have to be installed in order to withstand the DC voltage of rectifier. Additionally, the load current contains harmonic components of considerable energy, resulting in higher losses and increased noise. Above all, special bushings are necessary for the valve side to access upper and lower winding terminals of each system from outside. Conclusively, two identical bushings are installed for star or delta system.

For approving the proper design and quality of manufacturing, special applied DC and DC polarity reversal tests have to be carried out. The test bay has to be equipped with DC test apparatus accordingly, and needs to provide adequate geometry to withstand the DC test voltage.

Technical items

In addition to the standard parameters of power transformers, special performance requirements have to be known for the design of HVDC transformers. These parameters are jointly defined by designers of the HVDC station and transformer design engineers in order to reach a cost-effective design for the entire equipment.

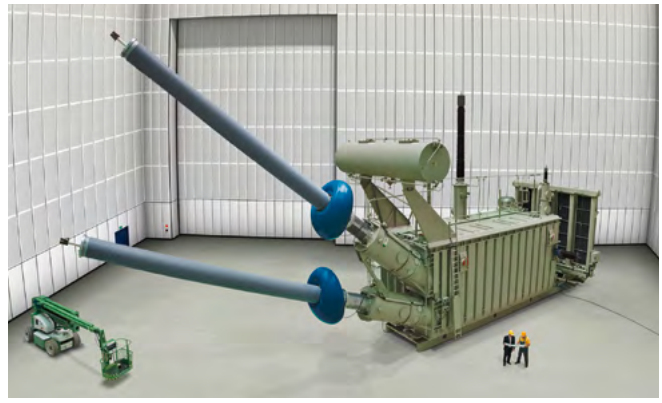

Fig. 5.10-1: Converter transformer for UHVDC bipolar transmission system ± 800 kVDC, 6,400 MW; 2,071 km: single phase; 550 kVAC, 816 kVDC; 321 MVA; high-pulse wye system feeding

Fig. 5.10-2: Converter transformer for HVDC bipolar transmission system ± 500 kVDC; 2,500 MW: single phase; 420 kVAC; 515 kVDC; 397 MVA; wye system (left side of figure), and delta system (right side of figure)

Special parameters are:

- Test levels: DC applied, DC polarity reversal and long-time AC defines the insulation assembly of the transformer
- Harmonic spectrum of the load current and phase relation generate additional losses, which have to compensated by the cooling circuit
- Voltage impedance impacting the dimensions of windings and the total height of the transformer
- DC bias in load, current, and transformer neutral have to be considered for no-load noise and no-load losses
- Derivative of the load current (di/dt) is a key parameter for the on-load tap changer
- Overload requirements have to be considered for cooling circuit and capacity of coolers
- Regulation range and number of steps influence the voltage per turn, which is a key design parameter
- Seismic requirements have to be considered for mechanical strength of turrets, outlets and bushings.

5.11 Distribution transformers

5.11.1 Liquid-immersed distribution transformers for European / U.S. / Canadian standard

On the last transformation step from the power plant to the consumer, distribution transformers (DT) provide the necessary power for systems and buildings. Accordingly, their operation must be reliable, efficient and, at the same time, silent.

Distribution transformers are used to convert electrical energy of higher voltage, usually up to 36 kV, to a lower voltage, usually 250 up to 435 V, with an identical frequency before and after the transformation. Application of the product is mainly within suburban areas, public supply authorities and industrial customers.

Distribution transformers are fault-tolerant, economic, and have a long life expectancy. These fluid-immersed transformers can be 1-phase or 3-phase. During operation, the windings can be exposed to high electrical stress by external overloads, and high mechanical stress by short circuits. They are made of copper or aluminum. Low-voltage windings are made of strip or flat wire, and the high-voltage windings are manufactured from round wire or flat wire.

Three product classes are available, as follows:

- Standard distribution transformers:
  - 1-phase or 3-phase, pole-mounted (fig. 5.11-1) or pad-mounted (fig. 5.11-2), wound or stacked core technology distribution transformer (≤ 2,500 kVA, U_m ≤ 36 kV
  - Medium distribution transformer (> 2,500 ≤ 6,300 kVA, Um ≤ 36 kV)
  - Large distribution transformer (> 6.3 – 30.0 MVA, U_m ≤ 72.5 kV)
- Special distribution transformers:
  - Special application: self-protected DT, regulating DT, low-emission DT, or others (autotransformer, transformer for converters, double-tier, multi-winding transformer, earthing transformer)
  - Environmental focus: amorphous core DT with significantly low no-load losses, DT with especially low load-loss design, low-emission DT in regard of noise and/or electromagnetic field emissions, DT with natural or synthetic ester where higher fire resistance and/or biodegradability is required
- Renewable distribution transformers:
  - Used in wind power plants, solar power plants, or sea flow/generator power plants.

Fig. 5.11-1: 1-phase pole-mounted LiDT

Fig. 5.11-2: 3-phase DT, pad-mounted

1
2
3
4
5
6
7
8
9
10
11
12
?

Environmental focus

FITformer® ACT amorphous core distribution transformer

The FITformer® ACT by Siemens fulfills all customer requirements and type tests needed with regard to short-circuit strength/partial discharge through a special transformer design: The windings are mechanically detached from the core, which safeguards the core from any mechanical loading. Special processing of the brittle, amorphous material, and protection offered by covers ensure the mechanical stabilization of the core. Consequently, there is no risk of partial discharge. Despite all of the economic benefits provided by this material, special consideration must still be given to the installation location of the transformer, as magnetostriction and magnetization-induced expansion and constriction of the laminations can lead to bigger overall dimension and an increase in the noise generated in the transformer. Savings potential thanks to amorphous core material: The higher purchase price of a distribution transformer with amorphous core lamination is offset over a short period, thanks to its very low losses. There are also environmental benefits: For a 630 kVA transformer, 71 t of CO_2 are saved over an operating period of 30 years. Amorphous core material which is based on a randomly arranged molecular structure results in less friction than traditional silicon-iron cores when magnetized. This unique property facilitates magnetization and demagnetization, and yields significantly lower demagnetization losses in amorphous materials. The extreme thinness of the material also provides lower eddy current losses. Amorphous core laminations are fabricated by rapidly cooling an iron-based molten alloy within one-ten-thousandth of a second.

This material then provides extremely low specific losses of 0.22 W/kg at 1.3T induction. The foil that is produced is extremely thin, and is rolled directly onto the component. Processing of the 25 µm thin and brittle foil is complicated, as it must not be exposed to any stress or mechanical loading. Conventional core installation technology used in Europe cannot be performed with this material. Instead, transformers with amorphous core material are designed with a wound core, as is standard practice for the American market.

Main specification data

- Liquid-immersed distribution transformers; hermetically sealed
- 3-phase, 50 Hz, Dy-connection
- Sn: 100... 1000 kVA
- HV: 10, 20, 30 kV; LV: 400, 410, 420 V
  Design impedance voltage: 4% (6%)
- Load losses: Ak, Bk, Ck
- No-load losses: A0-50%
- Noise level: based on loss category B0, or “as low as possible”
- Design based on regionally predominant standards (IEC or ANSI/IEEE).

Special transformers

FITformer® REG

Main features of FITformer® REG 2.0

- Fluid-immersed distribution transformer
- Power range up to 630 kVA
- Maximum operating voltage: 36 kV
- Low-voltage load regulation range in three stages
- Operating characteristics and dimensions correspond to conventional distribution transformers
- Additional high-voltage tapping range for optimum operation
- Insulation possible using alternative fluid (ester or silicone oil).

The challenge: bidirectional power flow

Decentralized power generation from renewable energies results in an increasingly complex power flow in the low-voltage distribution grid. Due to their increasing cost-efficiency, wind turbines and photovoltaic plants are becoming more attractive, especially in rural areas. Network operators are facing the growing challenge of maintaining a constant voltage. An efficient, high-performance, and exceptionally adaptable system is required to create a highly efficient and up-to-date grid infrastructure. It needs to consider electricity producers and consumers, but also prosumers (electricity consumers who double as producers), as their load consumption, electricity feed-in and storage abilities are subject to considerable fluctuations.

Reliability

- No replacement of substation thanks to space-saving design
- No additional losses compared to conventional fluid-immersed distribution transformers
- Avoidance of regulation loops with the transformer in the medium-voltage grid
- Low maintenance needs
- Easy accessibility of the control cubicle.

The FITformer® REG maintenance requirement is low. Thanks to the use of a combination of vacuum and air-break contactors, the externally mounted regulation and control unit, and the low number of switching cycles.

The transformer tank does not contain any moving elements. This prevents oil contamination and reduces the need for maintenance. The FITformer® REG 2.0 ensures ease of use thanks to separation of the regulation and control technology. Electromechanical switching elements, placed in a separate unit directly on the transformer tank, form the centerpiece of the regulated distribution transformer. A combination of vacuum and air-break contactors are used. These are characterized by high reliability, operating safety, and a compact design. With up to 5 million operating cycles at rated operating current, the combination of vacuum and air-break contactors offers a considerably longer life span than their conventional counterparts.

1
2
3
4
5
6
7
8
9
10
11
12
?

Renewable focus

Main features of transformers for wind applications

- Liquid-immersed (LiDT) transformers up to 9.8 MVA 72.5 kV
- Low weight
- High efficiency and reliability
- Environmental protection with the use of alternative fluids such as ester
- Available globally
- Tailor-made solution
- Converter operation
- Overvoltage and voltage fluctuation
- High energy density.

Product range

Today's extensive Siemens product range comprises two main transformer types, GEAFOL cast-resin transformers and liquid-filled transformers. Both types can be customized in detail to meet individual customer requirements.

Siemens' liquid-immersed transformers provide an innovative and highly-reliable approach to transformer technology. Hermetically sealed, they can be installed outdoors without special housing and require minimal maintenance.

The devices feature a range of standard connection systems for easy installation, ranging from normal porcelain to plug-in bushings. Standby power losses are extremely low, which ensures maximum overall efficiency. The fire protection capability of these transformers has been optimized using dielectric synthetic ester insulation liquid, which has a lower fire and flash point and complies with IEC 61099. In terms of environmental considerations, the insulating liquids are biodegradable, and the transformers can be recycled, which means that waste is kept to a minimum.

Main features of transformers for photovoltaic (PV) applications

- Transformation of the voltage supplied by the PV (normally < 1 kV) into the required medium-voltage level (≤ 36 kV)
- Transformer substation located directly beside solar panels to avoid further losses
- Customized designs
- Transformers with multiple LV windings: The high requirements of PV converters are met with a special double-tier design
- Transformers for converter load: The transformers are designed to handle the non-sinusoidal load of converters
- Low-loss design
- Tailor-made solutions.

Siemens transformers are made of high-quality materials, ensuring efficient operation and low losses. Thanks to our available touch-proof design, the outside and inside installation is possible without extra housings for the transformers.

Photovoltaics (PV) use solar cells bundled in solar panels to produce DC current. Depending on the design of the photovoltaic plant, several panels are connected to a rectifier to convert the produced DC current into AC current. In the next step, distribution or static converter transformers (GEAFOL or liquid-immersed) transform the energy to the medium-voltage level up to 36 kV. These can be bundled, and stepped-up to a higher voltage transmission level with a medium power transformer.

Step-up transformers connect photovoltaic plants to the grid. As the conditions in solar power plants are rather severe, those transformers need to withstand both high temperatures and harsh weather conditions. Sizing of these transformers is a crucial factor when planning a PV power plant. Transformers with too large rating can lead to instabilities and economic disadvantages. On the other hand, small transformer power might not exploit the whole capability of the plant erected. Solar inverters or PV inverters for photovoltaic systems transform the DC power generated from the solar modules into AC power, and feed this power into the network. A special multiple-winding design of the transformer enables the connection of several PV panel strings to the grid with a smaller number of transformers in total.

1
2
3
4
5
6
7
8
9
10
11
12
?

Liquid-immersed distribution transformer selection table – Technical data, dimensions and weights

EcoDesign and A0Bk loss levels

Rated power * EcoDesign	Primary		Tapping	Secondary		Vector group	Max. no-load losses	Max. load losses 75 °C	Impedance voltage	Sound power level	Sound pressure level	Dimensions				
	No-load voltage	Insulation level		No-load voltage	Insulation level							Length	Width	Height	Distance between rollers	Weight
100 kVA*	10 kV	LI 75 AC28	± 2 × 2.5%	400 V	LI - AC3	Dyn5	145 W	1,750 W	4%	41 dB(A)	29 dB(A)	900 mm	650 mm	1,300 mm	520 mm	500 kg
100 kVA	10 kV	LI 75 AC28	± 2 × 2.5%	400 V	LI - AC3	Dyn5	145 W	1,475 W	4%	41 dB(A)	29 dB(A)	1,000 mm	750 mm	1,350 mm	520 mm	700 kg
100 kVA*	20 kV	LI 125 AC50	± 2 × 2.5%	400 V	LI - AC3	Dyn5	145 W	1,750 W	4%	41 dB(A)	29 dB(A)	1,000 mm	750 mm	1,400 mm	520 mm	650 kg
100 kVA	20 kV	LI 125 AC50	± 2 × 2.5%	400 V	LI - AC3	Dyn5	145 W	1,475 W	4%	41 dB(A)	29 dB(A)	950 mm	700 mm	1,300 mm	520 mm	700 kg
160 kVA*	10 kV	LI 75 AC28	± 2 × 2.5%	400 V	LI - AC3	Dyn5	210 W	2,350 W	4%	44 dB(A)	32 dB(A)	950 mm	850 mm	1,350 mm	520 mm	650 kg
160 kVA	10 kV	LI 75 AC28	± 2 × 2.5%	400 V	LI - AC3	Dyn5	210 W	2,000 W	4%	44 dB(A)	32 dB(A)	1,000 mm	750 mm	1,650 mm	520 mm	900 kg
160 kVA*	20 kV	LI 125 AC50	± 2 × 2.5%	400 V	LI - AC3	Dyn5	210 W	2,350 W	4%	44 dB(A)	32 dB(A)	1,000 mm	750 mm	1,400 mm	520 mm	750 kg
160 kVA	20 kV	LI 125 AC50	± 2 × 2.5%	400 V	LI - AC3	Dyn5	210 W	2,000 W	4%	44 dB(A)	32 dB(A)	1,000 mm	750 mm	1,450 mm	520 mm	900 kg
250 kVA*	10 kV	LI 75 AC28	± 2 × 2.5%	400 V	LI - AC3	Dyn5	300 W	3,250 W	4%	47 dB(A)	34 dB(A)	1,150 mm	850 mm	1,500 mm	520 mm	950 kg
250 kVA	10 kV	LI 75 AC28	± 2 × 2.5%	400 V	LI - AC3	Dyn5	300 W	2,750 W	4%	47 dB(A)	34 dB(A)	1,100 mm	800 mm	1,350 mm	520 mm	1,150 kg
250 kVA*	20 kV	LI 125 AC50	± 2 × 2.5%	400 V	LI - AC3	Dyn5	300 W	3,250 W	4%	47 dB(A)	34 dB(A)	1,150 mm	750 mm	1,650 mm	520 mm	1,150 kg
250 kVA	20 kV	LI 125 AC50	± 2 × 2.5%	400 V	LI - AC3	Dyn5	300 W	2,750 W	4%	47 dB(A)	34 dB(A)	1,100 mm	800 mm	1,500 mm	520 mm	1,150 kg
400 kVA*	10 kV	LI 75 AC28	± 2 × 2.5%	400 V	LI - AC3	Dyn5	430 W	4,600 W	4%	50 dB(A)	37 dB(A)	1,250 mm	950 mm	1,500 mm	670 mm	1,300 kg
400 kVA	10 kV	LI 75 AC28	± 2 × 2.5%	400 V	LI - AC3	Dyn5	430 W	3,850 W	4%	50 dB(A)	37 dB(A)	1,250 mm	850 mm	1,400 mm	670 mm	1,500 kg
400 kVA*	20 kV	LI 125 AC50	± 2 × 2.5%	400 V	LI - AC3	Dyn5	430 W	4,600 W	4%	50 dB(A)	37 dB(A)	1,350 mm	1,000 mm	1,700 mm	670 mm	1,500 kg
400 kVA	20 kV	LI 125 AC50	± 2 × 2.5%	400 V	LI - AC3	Dyn5	430 W	3,850 W	4%	50 dB(A)	37 dB(A)	1,250 mm	850 mm	1,450 mm	670 mm	1,500 kg
630 kVA*	10 kV	LI 75 AC28	± 2 × 2.5%	400 V	LI - AC3	Dyn5	600 W	6,500 W	4%	52 dB(A)	38 dB(A)	1,350 mm	1,100 mm	1,650 mm	670 mm	1,850 kg
630 kVA	10 kV	LI 75 AC28	± 2 × 2.5%	400 V	LI - AC3	Dyn5	600 W	5,400 W	4%	52 dB(A)	38 dB(A)	1,350 mm	1,050 mm	1,700 mm	670 mm	2,200 kg
630 kVA*	20 kV	LI 125 AC50	± 2 × 2.5%	400 V	LI - AC3	Dyn5	600 W	6,500 W	4%	52 dB(A)	38 dB(A)	1,350 mm	1,000 mm	1,850 mm	670 mm	2,150 kg
630 kVA	20 kV	LI 125 AC50	± 2 × 2.5%	400 V	LI - AC3	Dyn5	600 W	5,400 W	4%	52 dB(A)	38 dB(A)	1,250 mm	850 mm	1,650 mm	670 mm	2,200 kg
630 kVA*	10 kV	LI 75 AC28	± 2 × 2.5%	400 V	LI - AC3	Dyn5	600 W	6,500 W	6%	52 dB(A)	38 dB(A)	1,450 mm	900 mm	1,650 mm	670 mm	1,850 kg
630 kVA	10 kV	LI 75 AC28	± 2 × 2.5%	400 V	LI - AC3	Dyn5	560 W	5,600 W	6%	52 dB(A)	38 dB(A)	1,450 mm	950 mm	1,700 mm	670 mm	2,100 kg
630 kVA*	20 kV	LI 125 AC50	± 2 × 2.5%	400 V	LI - AC3	Dyn5	600 W	6,500 W	6%	52 dB(A)	38 dB(A)	1,450 mm	1,000 mm	1,800 mm	670 mm	2,150 kg
630 kVA	20 kV	LI 125 AC50	± 2 × 2.5%	400 V	LI - AC3	Dyn5	560 W	5,600 W	6%	52 dB(A)	38 dB(A)	1,300 mm	850 mm	1,650 mm	670 mm	2,250 kg
800 kVA*	10 kV	LI 75 AC28	± 2 × 2.5%	400 V	LI - AC3	Dyn5	650 W	8,400 W	6%	53 dB(A)	39 dB(A)	1,850 mm	1,150 mm	1,700 mm	670 mm	2,250 kg
800 kVA	10 kV	LI 75 AC28	± 2 × 2.5%	400 V	LI - AC3	Dyn5	650 W	7,000 W	6%	53 dB(A)	39 dB(A)	1,600 mm	1,000 mm	1,650 mm	670 mm	2,650 kg
800 kVA*	20 kV	LI 125 AC50	± 2 × 2.5%	400 V	LI - AC3	Dyn5	650 W	8,400 W	6%	53 dB(A)	39 dB(A)	1,700 mm	1,050 mm	1,900 mm	670 mm	2,750 kg
800 kVA	20 kV	LI 125 AC50	± 2 × 2.5%	400 V	LI - AC3	Dyn5	650 W	7,000 W	6%	53 dB(A)	39 dB(A)	1,600 mm	1,000 mm	1,650 mm	670 mm	2,650 kg
1,000 kVA*	10 kV	LI 75 AC28	± 2 × 2.5%	400 V	LI - AC3	Dyn5	770 W	10,500 W	6%	55 dB(A)	41 dB(A)	1,950 mm	1,150 mm	1,850 mm	820 mm	2,850 kg
1,000 kVA	10 kV	LI 75 AC28	± 2 × 2.5%	400 V	LI - AC3	Dyn5	770 W	9,000 W	6%	55 dB(A)	41 dB(A)	1,900 mm	1,050 mm	1,950 mm	820 mm	3,300 kg
1,000 kVA*	20 kV	LI 125 AC50	± 2 × 2.5%	400 V	LI - AC3	Dyn5	770 W	10,500 W	6%	55 dB(A)	41 dB(A)	1,700 mm	1,200 mm	2,000 mm	820 mm	3,100 kg
1,000 kVA	20 kV	LI 125 AC50	± 2 × 2.5%	400 V	LI - AC3	Dyn5	770 W	9,000 W	6%	55 dB(A)	41 dB(A)	1,900 mm	1,050 mm	1,950 mm	820 mm	3,300 kg
1,250 kVA*	10 kV	LI 75 AC28	± 2 × 2.5%	400 V	LI - AC3	Dyn5	950 W	11,000 W	6%	56 dB(A)	42 dB(A)	2,000 mm	1,100 mm	2,100 mm	820 mm	3,900 kg
1,250 kVA*	20 kV	LI 125 AC50	± 2 × 2.5%	400 V	LI - AC3	Dyn5	950 W	11,000 W	6%	56 dB(A)	42 dB(A)	1,950 mm	1,200 mm	2,050 mm	820 mm	3,750 kg
1,600 kVA*	10 kV	LI 75 AC28	± 2 × 2.5%	400 V	LI - AC3	Dyn5	1,200 W	14,000 W	6%	58 dB(A)	43 dB(A)	2,100 mm	1,300 mm	2,100 mm	820 mm	4,600 kg
1,600 kVA*	20 kV	LI 125 AC50	± 2 × 2.5%	400 V	LI - AC3	Dyn5	1,200 W	14,000 W	6%	58 dB(A)	43 dB(A)	1,950 mm	1,250 mm	2,100 mm	820 mm	4,450 kg
2,000 kVA*	10 kV	LI 75 AC28	± 2 × 2.5%	400 V	LI - AC3	Dyn5	1,450 W	18,000 W	6%	60 dB(A)	45 dB(A)	2,200 mm	1,300 mm	2,250 mm	1,070 mm	5,700 kg
2,000 kVA*	20 kV	LI 125 AC50	± 2 × 2.5%	400 V	LI - AC3	Dyn5	1,450 W	18,000 W	6%	60 dB(A)	45 dB(A)	2,200 mm	1,300 mm	2,250 mm	1,070 mm	5,550 kg
2,500 kVA*	10 kV	LI 75 AC28	± 2 × 2.5%	400 V	LI - AC3	Dyn5	1,750 W	22,000 W	6%	63 dB(A)	48 dB(A)	2,200 mm	1,300 mm	2,200 mm	1,070 mm	5,750 kg
2,500 kVA*	20 kV	LI 125 AC50	± 2 × 2.5%	400 V	LI - AC3	Dyn5	1,750 W	22,000 W	6%	63 dB(A)	48 dB(A)	2,150 mm	1,300 mm	2,200 mm	1,070 mm	5,800 kg

Table 5.11-1: Liquid-immersed distribution transformer selection table – Technical data, dimension and weights

5.11.2 Voltage regulators

Siemens invented the voltage regulator in 1932 and pioneered its use in the United States. Voltage regulators are tapped autotransformers used to ensure that a desired level of voltage is maintained at all times. A voltage regulator comprises a tapped autotransformer and a tap changer. The standard voltage regulator provides ± 10 % adjustment in thirty-two 0.625 % steps. Voltage regulators with ± 15 % and ± 20 % regulation are available for some designs.

Voltage regulators are liquid-immersed and can be 1-phase or 3-phase. They may be self-cooled or forced air-cooled. Available at 50 or 60 Hz and with 55 or 65 °C temperature rise, they can be used in any electrical system to improve voltage quality.

Voltage regulator ratings are based on the percent of regulation (i.e., 10 %). For example, a set of three 1-phase 333 kVA regulators would be used with a 10 MVA transformer (e.g., 10 MVA • 0.10/3 = 333 kVA). 1-phase voltage regulators are available in ratings ranging from 2.5 kV to 19.9 kV, and from 38.1 kVA to 889 kVA (fig. 5.11-3). 3-phase voltage regulators are available at 13.2 kV or 34.5 kV, and from 500 kVA to 4,000 kVA.

Voltage regulators can be partially or completely untanked for inspection and maintenance without disconnecting any internal electrical or mechanical connections. After the unit is untanked, it is possible to operate the voltage regulator mechanism and test the control panel from an external voltage source without any reconnections between the control and the regulator.

Standard external accessories

The standard accessories are as follows:

- External metal-oxide varistor (MOV) bypass arrester
- Cover-mounted terminal block with a removable gasketed cover. It allows easy potential transformer reconnections for operation at different voltages
- Oil sampling valve
- Two laser-etched nameplates
- External oil sight gauge that indicates the oil level at 25 °C ambient air temperature, and the oil color
- External position indicator that shows the tap changer position
- Mounting bosses for the addition of lightning arresters to the source (S), load (L), and source-load (SL) bushings. They are fully welded around their circumference.

Fig. 5.11-3: 1-phase voltage regulator, JFR

Accessories and options

Remote mounting kit

Extra-long control cables are provided for remote mounting of the control cabinet at the base of the pole.

Sub-bases

To raise the voltage regulator to meet safe operating clearances from the ground to the lowest live part.

Auxiliary PT

Operation at different voltages.

Testing

All voltage regulators shall be tested in accordance with the latest ANSI C57.15 standards.

Standard tests include:

- Resistance measurements of all windings
- Ratio tests on all tap locations
- Polarity test
- No-load loss at rated voltage and rated frequency
- Excitation current at rated voltage and rated frequency
- Impedance and load loss at rated current and rated frequency
- Applied potential
- Induced potential
- Insulation power factor test
- Impulse test
- Insulation resistance.

POWEREN.IR

Fig. 5.11-4: In-phase voltage regulators, Niederstetten, Germany

Special application for voltage regulators (pilot projects in Germany)

Many operators are familiar with voltage fluctuations in their grids which are caused by expansion, increasing load, and economic decisions. The use of electronic components is of limited economic benefit and allows energy costs to increase unnecessarily. The use of in-phase regulators (fig. 5.11-4) is an extremely sensible measure for adhering to the voltage limits during grid operation, one that is more cost efficient than expanding the MV grid. Voltage regulators compensate for different voltage loads and maintain a constant output voltage.

The voltage regulators for area voltage regulation are positioned along the line, so that voltage range infringements cannot occur – regardless of the load situations at the secondary substations between the transformer substation and the in-phase regulator. Power quality measurement on the primary and secondary sides of the in-phase regulator make it possible to monitor the voltage quality and to transmit the measured data. Different options are available for setting up the regulating system for in-phase regulators:

- Local regulation
  - Regulation by measuring the voltage directly at the load-side output of the in-phase regulator system
  - Regulation by measuring the voltage and current at the load-side output of the regulator with current compounding
- Area voltage regulation
  - Distributed measurement on the medium- and/or low-voltage grid
  - Voltage optimization of the grid area by the regional controller and active regulation of the in-phase regulator system.

Benefits of voltage regulation

- Cost-saving alternative to grid expansion
- Easily integrated into existing grid structure
- Easy installation
- Extensive regulating range
- Flexible regulation models for optimum operation
- Siemens has many years of experience with proven products.

1
2
3
4
5
6
7
8
9
10
11
12
?

5.11.3 GEAFOL cast-resin transformers

GEAFOL transformers have been in successful service since 1965. Many licenses have been granted to major manufacturers throughout the world since then. Over 100,000 units have proven themselves in power distribution or converter operation all around the globe.

Advantages and applications

GEAFOL distribution and power transformers in ratings from 100 to approximately 50,000 kVA, and lightning impulse (LI) values up to 250 kV are full substitutes for liquid-immersed transformers with comparable electrical and mechanical data. They are designed for indoor installation, close to their point of use at the center of the major load consumers. The exclusive use of flame-retardant insulating materials frees these transformers from all restrictions that apply to oil-filled electrical equipment, such as the need for oil collecting pits, fire walls, fire extinguishing equipment. For outdoor use, specially designed sheet-metal enclosures are available.

GEAFOL transformers are installed wherever oil-filled units cannot be used, or where use of liquid-immersed transformers requires major constructive efforts, for example, inside buildings, in tunnels, on ships, cranes and offshore platforms, inside wind turbines, in groundwater catchment areas, in food processing plants, and in portable or static containers.

Often, these transformers are combined with their primary and secondary switchgear and distribution boards in compact substations that are installed directly at their point of use.

When used as static converter transformers for variable speed drives, they can be installed together with the converters at the drive location. This reduces construction requirements, cable costs, transmission losses, and installation costs.

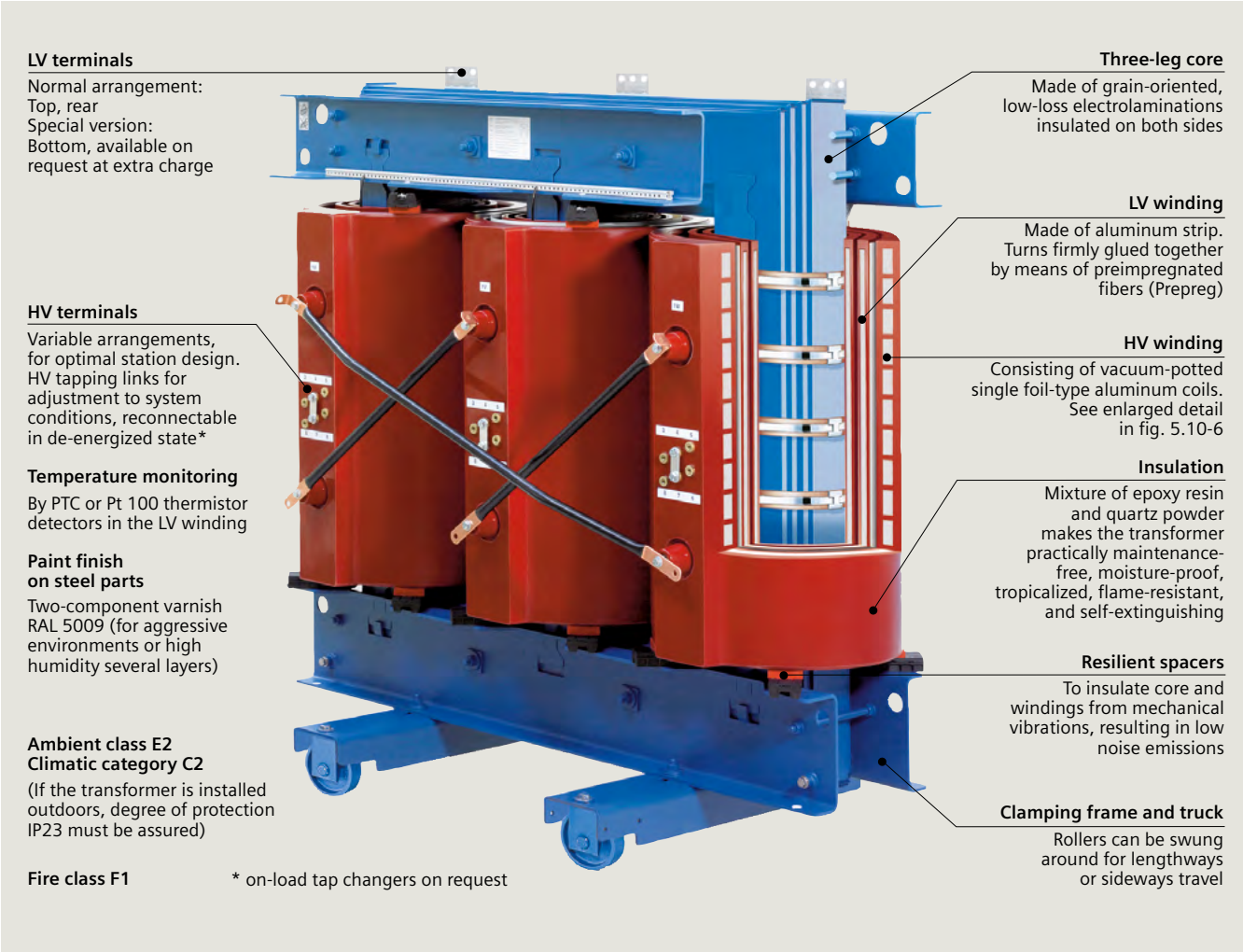

Fig. 5.11-5: GEAFOL cast-resin dry-type transformer properties

GEAFOL transformers are fully BIL-rated. Their noise levels are comparable to oil-filled transformers. Taking into account the indirect cost reductions, they are cost-competitive. By virtue of their design, GEAFOL transformers are practically maintenance-free.

Standards and regulations

GEAFOL cast-resin dry-type transformers comply with VDE 0532-76-11, IEC 60076-11/DIN EN 60076-11 and DIN EN 50541-1. On request, other standards such as GOST, SABS or CSA/ANSI/IEEE, can also be met account.

EU guidelines: Ecodesign Directive of the European Commission

Effective from July 1, 2015, transformers that are installed within the European Economic Area (EEA) must meet the ecodesign requirements of the new directive, provided that they fall within the scope of the directive. Since the directive is a measure to implement Ecodesign Directive 209/125/EC, the CE mark is used as evidence of compliance. GEAFOL Basic transformers are designed accordingly, and are particularly low-loss and economic.

Characteristic properties (fig. 5.11-5)

HV winding

The high-voltage windings are wound from aluminum foil (copper as winding material on request) interleaved with high-grade insulating foils. The assembled and connected individual coils are placed in a heated mold, and are potted in a vacuum furnace with a mixture of pure silica (quartz sand) and specially blended epoxy resins. The only connections to the outside are casted brass nuts that are internally bonded to the aluminum winding connections.

The external delta connections are made of insulated copper or aluminum connectors to guarantee an optimal installation design. The resulting high-voltage windings are fire-resistant, moisture-proof and corrosion-proof. They show excellent aging properties under all operating conditions.

The foil windings combine a simple winding technique with a high degree of electrical safety. The insulation is subjected to less electrical stress than in other types of windings. In a conventional round-wire winding, the interturn voltages can add up to twice the interlayer voltage. In a foil winding, it never exceeds the voltage per turn, because a layer consists of only one winding turn. This results in high AC voltage and impulse voltage withstand capacity (fig. 5.11-6).

One reason for using aluminum is because the thermal expansion coefficients of aluminum and cast resin are so similar that thermal stresses resulting from load changes are kept to a minimum. However, copper windings are also available.

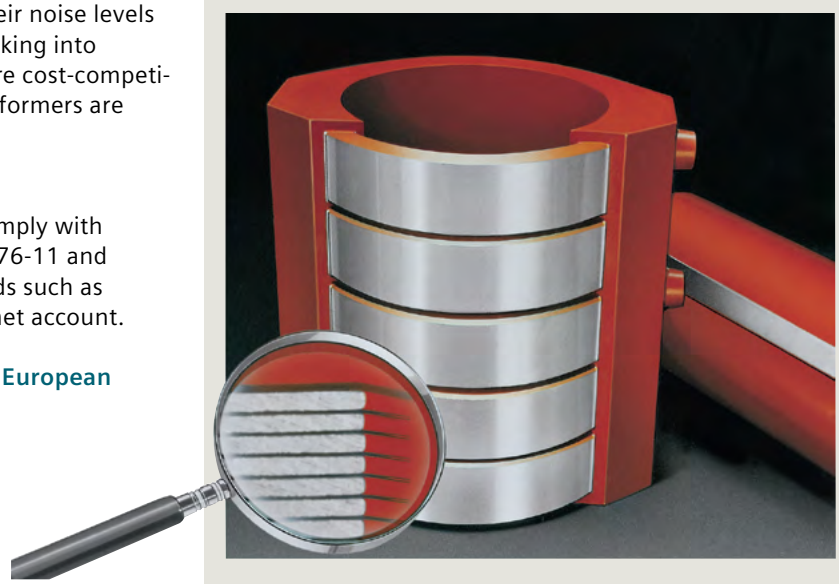

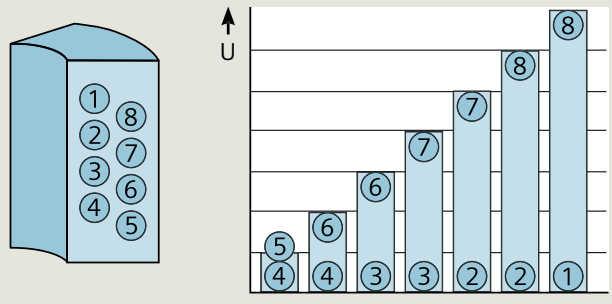

Round-wire winding
The interturn voltages can add up to twice the interlayer voltage

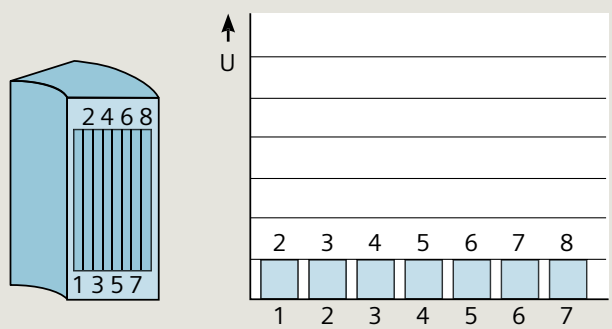

Foil winding
The interlayer voltage is equal to the interturn voltage

Fig. 5.11-6: High-voltage encapsulated winding design of GEAFOL cast-resin transformer, and voltage stress of a conventional round-wire winding (above) and the foil winding (below)

1
2
3
4
5
6
7
8
9
10
11
12
?

LV winding

The standard low-voltage winding with its considerably reduced dielectric stresses is wound from single aluminum sheets (copper as winding material on request) with epoxy-resin pre-impregnated fiberglass fabrics (Prepreg).

The assembled coils are then oven-cured to form uniformly bonded solid cylinders that are impervious to moisture. Through the single-sheet winding design, excellent dynamic stability under short-circuit conditions is achieved. Connections are submerged arc-welded to the aluminum sheets, and are extended either as aluminum or copper bars to the secondary terminals.

Fire safety

GEAFOL transformers use only flame-retardant and self-extinguishing materials in their construction. No additional substances, such as aluminum oxide trihydrate, which could negatively influence the mechanical stability of the cast-resin molding material, are used. Internal arcing from electrical faults, as well as externally applied flames do not cause the transformers to burst or burn. After the source of ignition is removed, the transformer is self-extinguishing. This design has been approved by fire officials in many countries for installation in populated buildings and other structures. The environmental safety of the combustion residues has been proven in many tests (fig. 5.11-7).

Classification of cast-resin transformers

Dry-type transformers have to be classified under the classes listed below:

- Environmental class
- Climatic class
- Fire behavior class.

These classes have to be shown on the rating plate of each dry-type transformer.

The properties laid down in the standards for ratings within the class relating to environment (humidity), climate, and fire behavior have to be demonstrated by means of tests.

These tests are described for the environmental class (code numbers E0, E1 and E2) and for the climatic class (code numbers C1 and C2) in IEC 60076-11. According to this standard, the tests are to be carried out on complete transformers. The tests of fire behavior (fire behavior class code numbers F0 and F1) are limited to tests on a duplicate of a complete transformer that consists of a core leg, a low-voltage winding, and a high-voltage winding.

GEAFOL cast-resin transformers meet the requirements of the highest defined protection classes:

- Environmental class E2 (optionally E3 according to IEC 60076-16, wind turbines application)
- Climatic class C2 (on request, designs for ambient air temperature below -25 °C are available)
- Fire behavior class F1.

Fig. 5.11-7: Flammability test of cast-resin transformer

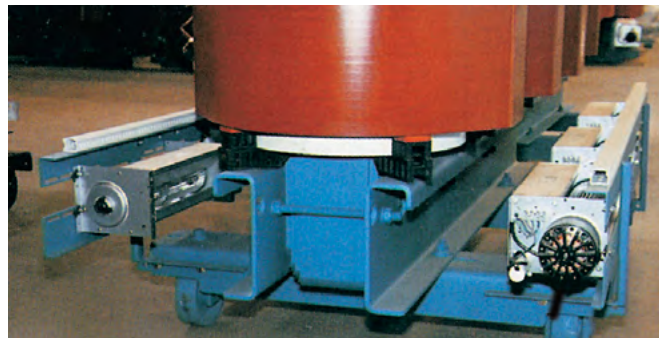

Fig. 5.11-8: Radial cooling fans on GEAFOL transformer for AF cooling

U_m (kV)	*LI* (kV) *2)	*AC* (kV) *2)
1.1	–	3
12	75	28
24	95/125	50
36	145/170	70
*2) other levels upon request		

Table 5.11-2: Standard insulation levels of GEAFOL (IEC)

Insulation class and temperature rise

The high-voltage winding and the low-voltage winding utilize class F insulating materials with a mean temperature rise of 100 K (standard design).

Overload capability

GEAFOL transformers can be overloaded permanently up to 50 % (with a corresponding increase in impedance voltage and load losses) if additional radial cooling fans are installed (dimensions can increase by approximately 100 mm in length and width) (fig. 5.11-8). Short-time overloads are uncritical as long as the maximum winding temperatures are not exceeded for extended periods of time (depending on initial load and ambient air temperature).

1
2
3
4
5
6
7
8
9
10
11
12
?

Temperature monitoring
Each GEAFOL transformer is fitted with three temperature sensors installed in the LV winding, and a solid-state tripping device with relay output. The PTC thermistors used for sensing are selected for the applicable maximum hot-spot winding temperature.

Additional sets of sensors can be installed, e.g., for fan control purposes. Alternatively, Pt100 sensors are available. For operating voltages of the LV winding of 3.6 kV and higher, special temperature measuring equipment can be provided.

Auxiliary wiring is run in a protective conduit and terminated in a central LV terminal box (optional). Each wire and terminal is identified, and a wiring diagram is permanently attached to the inside cover of this terminal box.

Installation and enclosures
Indoor installation in electrical operating rooms or in various sheet metal enclosures is the preferred method of installation. The transformers need to be protected against access to the terminals or the winding surfaces, against direct sunlight and against water. Unless sufficient ventilation is provided by the installation location or the enclosure, forced-air cooling must be specified or provided by others.

Instead of the standard open terminals, plug-type elbow connectors can be supplied for the high-voltage side with LI ratings up to 170 kV. Primary cables are usually fed to the transformer from trenches below, but can also be connected from above (fig. 5.11-9).

Secondary connections can be made by multiple insulated cables, or by connecting bars from either below or above. Terminals are made of aluminum (copper upon request).

A variety of indoor and outdoor enclosures in different protection classes are available for the transformers alone, or for indoor compact substations in conjunction with high-voltage and low-voltage switchgear panels. PEHLA-tested housings are also available (fig. 5.11-10).

Using vacuum switches with GEAFOL transformers

Transformers are the key to operating elements at hubs in the distribution system. Vacuum switches control the switching of distribution transformers reliably and safely, with no need for overvoltage protection.

An important parameter in transformers is the magnetization current, one of the "small inductive currents." Interrupting these currents naturally creates marked transients, but no unacceptably high switching overvoltages, that would pose a threat to connected distribution transformers, are permitted.

Extensive trials using a combination of Siemens GEAFOL transformers and vacuum switches have proven that the

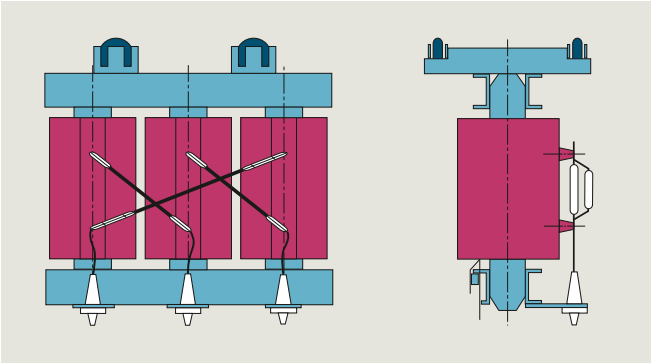

Fig. 5.11-9: GEAFOL transformer with plug-type cable connections

Fig. 5.11-10: GEAFOL transformer in protective housing to IP20/40

GEAFOL medium-voltage windings can handle switching overvoltages with no difficulty – providing further proof of their high product quality and operational safety.

Cost-effective recycling
The oldest of the GEAFOL cast-resin transformers that entered production in the mid-1960s are approaching the end of their service life. Much experience has been gathered over the years with the processing of faulty or damaged coils from such transformers. The metals and resin used in GEAFOL cast-resin transformers, approximately 95 % of their total mass, can be recyled. The process used is non-polluting. Given the value of secondary raw materials, the procedure is often cost-effective, even with the small amounts currently being processed.

1
2
3
4
5
6
7
8
9
10
11
12
?

The GEAFOL Basic – a true GEAFOL and more

The GEAFOL Basic is based on almost 50 years of proven GEAFOL technology and quality, but it offers numerous innovations that has allowed Siemens to provide it with several very special characteristics. For example, the GEAFOL Basic distribution transformer and static converter with a maximum rated power of 50 MVA and a maximum medium voltage of 41.4 kV is almost 10 % lighter than a comparable model from the proven GEAFOL series. And this "slimming down" also positively affects the dimensions. This could be achieved by a considerably improved heat dissipation because of the newly patented design. Because of the reduced dimensions, it is predestined for installation in areas with limited space, such as nacelles and towers of wind turbines, data centers, or the upper floors of high-rise buildings.

Of course, all GEAFOL Basic distribution transformers meet the specifications of VDE 0532-76-11/IEC 60076-11/ DIN EN 60076-11 and DIN EN 50541-1. They meet the highest requirements for safe installation in residential and work environments with climatic class C2, environmental class E2 and fire behavior class F1. With fewer horizontal surfaces, less dust is deposited, which leads to a further reduction in the already minimal time and effort needed for maintenance and also increases operational reliability.

Optimum combination

The GEAFOL Basic distribution transformer represents an optimum compromise between performance, safety, and small dimensions. In addition, the high degree of standardization ensures the best possible cost-benefit ratio. Thanks to their compact shape and comprehensive safety certification, GEAFOL Basic distribution transformers can be used in almost every environment.

1
2
3
4
5
6
7
8
9
10
11
12
?

A new design for your success –
the reliable, space-saving GEAFOL Basic

1 **Three-limb core** made of grain-oriented, low-loss electric sheet steel insulated on both sides

2 **Low-voltage winding** made of aluminum strip; turns are permanently bonded with insulating sheet

3 **High-voltage winding** made of individual aluminum coils using foil technology and vacuum casting

4 **Low-voltage connectors (facing up)**

5 **Lifting eyes** integrated into the upper core frame for simple transport

6 **Delta connection tubes with HV terminals**

7 **Clamping frame and truck**
Convertible rollers for longitudinal and transverse travel

8 **Insulation made of an epoxy resin/quartz powder mixture** makes the transformer extensively maintenance-free, moisture-proof and suitable for the tropics, fire-resistant and self-extinguishing

9 **High-voltage tappings ±2 x 2.5 %** (on the high-voltage terminal side) to adapt to the respective network conditions; reconnectable off load

Temperature monitoring with PTC thermistor detector in limb V of the low-voltage winding (in all three phases on request)

Painting of steel parts
High-build coating, RAL 5009 on request: two-component coating (for particularly aggressive environments)

Structure made of individual components
For example, windings can be individually assembled and replaced on site

Climatic class C2

Environmental class E2

Fire behavior class F1

1
2
3
4
5
6
7
8
9
10
11
12
?

5.11.4 GEAFOL special transformers

GEAFOL cast-resin transformers with oil-free on-load tap changers (OLTC)

The voltage-regulating cast-resin transformers connected on the load side of the medium-voltage power supply system feed the plant-side distribution transformers. The on-load tap changer controlled transformers used in these medium-voltage systems need to have appropriately high ratings.

Siemens offers suitable transformers with OLTC in its GEAFOL design (fig. 5.11-11), which has proved successful over many years and is available in ratings of up to 50 MVA. The range of rated voltage extends to 36 kV, and the maximum impulse voltage is 200 kV. The main applications of this type of transformer are in modern industrial plants, hospitals, office and apartment blocks, and shopping centers.

Linking 1-pole tap changer modules together by means of insulating shafts produces a 3-pole on-load tap changer for regulating the output voltage of 3-phase GEAFOL transformers. In its nine operating positions, this type of tap changer has a rated current of 500 A and a rated voltage of 900 V per step. This allows voltage fluctuations of up to 7,200 V to be kept under control. However, the maximum control range utilizes only 20 % of the rated voltage.

Transformers for static converters

These are special cast-resin power transformers that are designed for the special demands of thyristor converter or diode rectifier operation.

Fig. 5.11-12: 23 MVA GEAFOL cast-resin transformer 10 kV/Dd0Dy11

The effects of such conversion equipment on transformers and additional construction requirements are as follows:

- Increased load by harmonic currents
- Balancing of phase currents in multiple winding systems (e.g., 12-pulse systems)
- Overload capability
- Higher voltage stress caused by commutation of the thyristors
- Types for 12-pulse systems or higher, if required.

Siemens supplies oil-filled converter transformers of all ratings and configurations known today, and dry-type cast-resin converter transformers up to 50 MVA and 250 kV LI (fig. 5.11-12).

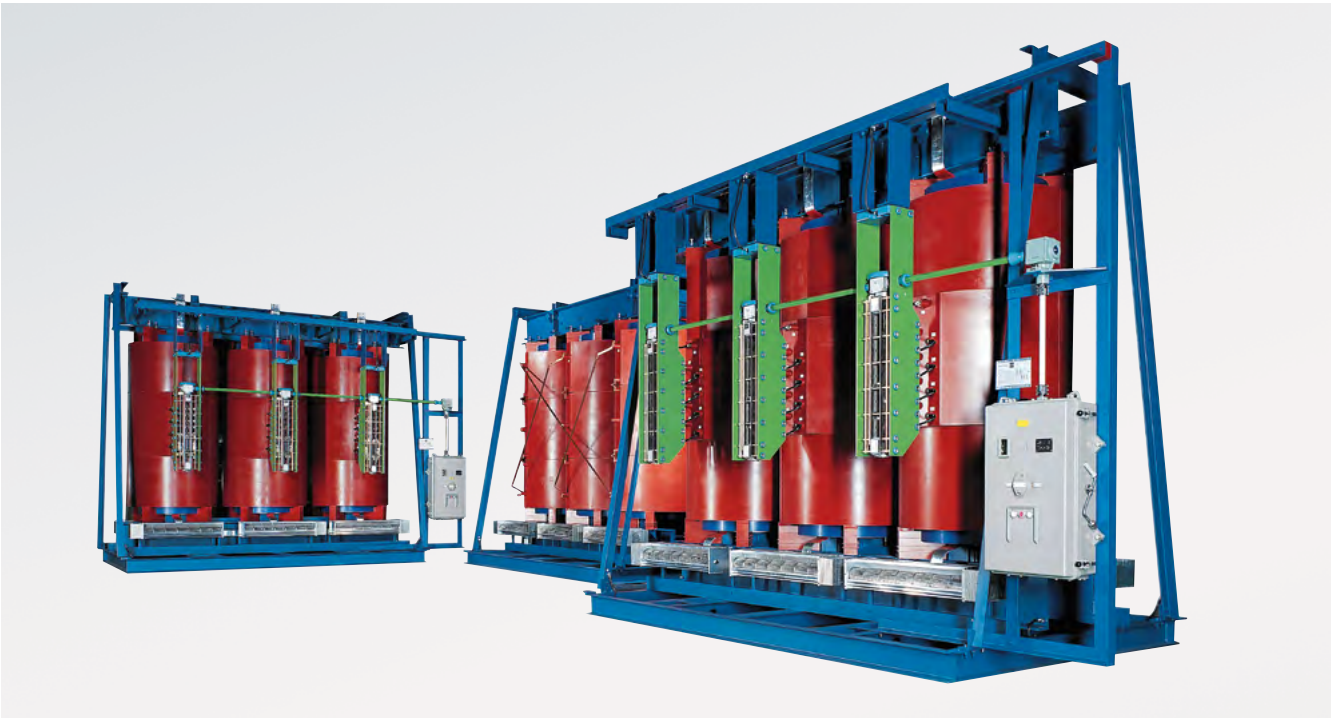

Fig. 5.11-11: 16/22-MVA GEAFOL cast-resin transformer with oil-free on-load tap changer

To define and quote for such transformers, it is necessary to know considerable details on the converter to be supplied and on the existing harmonics. These transformers are almost exclusively inquired together with the respective drive or rectifier system, and are always custom-engineered for the given application.

Neutral earthing transformers

When a neutral earthing reactor or earth-fault neutralizer is required in a 3-phase system and no suitable neutral is available, a neutral earthing must be provided by using a neutral earthing transformer.

Neutral earthing transformers are available for continuous operation or short-time operation. The zero impedance is normally low. The standard vector group is wye/delta. Some other vector groups are also possible.

Neutral earthing transformers can be built by Siemens in all common power ratings.

Transformers for silicon-reactor power feeding

These special transformers are an important component in plants for producing polycrystalline silicon, which is needed particularly by the solar industry for the manufacture of collectors.

What is special about these transformers is that they have to provide five or more secondary voltages for the voltage supply of the special thyristor controllers. The load is highly unbalanced and is subject to harmonics that are generated by the converters. Special GEAFOL cast-resin transformers with open secondary circuit have been developed for this purpose. The rated power can be up to round about 10 MVA, and the current can exceed an intensity of 5,000 A depending on the reactor type and operating mode. Depending on the reactor control system, two-winding or multi-winding transformers will be used (fig. 5.11-13).

Fig. 5.11-13: 4771 kVA GEAFOL converter transformer with 5 secondary tappings 10/0.33 – 2.4 kV

GEAFOL cast-resin transformers in protective housings with air-water cooling system

GEAFOL cast-resin transformers (fig. 5.11-14) are designed using the special AFWF cooling system. With this system, the thermal losses generated in the windings and in the iron core are not released directly into the environment as hot air, but are collected in a largely airtight protective housing around and above the transformer. Then, they are compressed using fans via an air-water heat exchanger, and released from there into an external cold water circulation system. The re-cooled, cold air is then distributed to all phases using a system of air guide plates, and is fed back to cool the windings from below. A double-pipe construction system for the coolers with leak monitoring ensures additional operational safety. The housing-transformer system is widely used on ships, and is available up to the highest ratings.

Fig. 5.11-14: GEAFOL cast-resin transformers in protective housing with air-water cooling system

GEAFOL cast-resin transformers for wind turbines

Years of electrical, technical and thermal know-how has enabled Siemens to build transformers that are suitable for both onshore and extreme offshore conditions. Installed in the nacelle of the wind turbine, GEAFOL cast-resin transformers require minimal installation effort and offer a range of various network concepts for optimal system efficiency. Various high-voltage and low-voltage connection options allow Siemens GEAFOL transformers to tailor units to meet customers specific needs. They meet the highest fire protection and environmental requirements and ensure maximum operating safety. Additionally, minimum maintenance is required and they are extremely easy to repair.

Rated power	Rated primary voltage[1] tapping ± 2 x 2.5 %	Rated secondary voltage[3] (no-load)	Insulation level HV (AC/LI)	Insulation level LV (AC/LI)	Impedance voltage at rated current	No-load losses	Load losses at 120 °C	Noise level	Order No.	Total weight	Length	Width	Height
S_r	U_r HV	U_r LV			u_{zr}	P_o	P_{k120}	L_{WA}			A1	B1	H1
kVA	kV	kV	kV	kV	%	W	W	dB		approx. kg	mm	mm	mm
100	10	0.4	28/75	3/–	4	440	1,850	59	4GB5044-3CY05-0AA2	600	1,210	670	840
	10	0.4	28/75	3/–	4	320	1,850	51	4GB5044-3GY05-0AA2	720	1,230	675	845
	10	0.4	28/v75	3/–	6	360	2,000	59	4GB5044-3DY05-0AA2	570	1,200	680	805
	10	0.4	28/75	3/–	6	290	2,000	51	4GB5044-3HY05-0AA2	720	1,280	685	890
	20	0.4	50/95	3/–	4	600	1,750	59	4GB5064-3CY05-0AA2	620	1,220	740	925
	20	0.4	50/95	3/–	4	400	1,750	51	4GB5064-3GY05-0AA2	740	1,260	745	945
	20	0.4	50/95	3/–	6	460	2,050	59	4GB5064-3DY05-0AA2	610	1,250	750	915
	20	0.4	50/95	3/–	6	340	2,050	51	4GB5064-3HY05-0AA2	730	1,280	750	940
	20	0.4	50/125	3/–	6	460	2,050	59	4GB5067-3DY05-0AA2	720	1,260	750	1,145
160	10	0.4	28/75	3/–	4	610	2,600	62	4GB5244-3CY05-0AA2	820	1,270	690	1,025
	10	0.4	28/75	3/–	4	440	2,600	54	4GB5244-3GY05-0AA2	960	1,260	685	1,100
	10	0.4	28/75	3/–	6	500	2,750	62	4GB5244-3DY05-0AA2	690	1,220	685	990
	10	0.4	28/75	3/–	6	400	2,750	54	4GB5244-3HY05-0AA2	850	1,290	695	1,010
	20	0.4	50/95	3/–	4	870	2,500	62	4GB5264-3CY05-0AA2	790	1,280	745	1,060
	20	0.4	50/95	3/–	4	580	2,500	54	4GB5264-3GY05-0AA2	920	1,320	755	1,060
	20	0.4	50/95	3/–	6	650	2,700	62	4GB5264-3DY05-0AA2	780	1,320	760	1,040
	20	0.4	50/95	3/–	6	480	2,700	54	4GB5264-3HY05-0AA2	860	1,350	765	1,050
	20	0.4	50/125	3/–	6	650	2,900	62	4GB5267-3DY05-0AA2	870	1,310	720	1,200
250	10	0.4	28/75	3/–	4	820	3,200	65	4GB5444-3CY05-0AA2	1,010	1,330	700	1,055
	10	0.4	28/75	3/–	4	600	3,200	57	4GB5444-3GY05-0AA2	1,250	1,340	700	1,190
	10	0.4	28/75	3/–	6	700	3,300	65	4GB5444-3DY05-0AA2	960	1,340	705	1,055
	10	0.4	28/75	3/–	6	560	3,300	57	4GB5444-3HY05-0AA2	1,130	1,390	715	1,070
	20	0.4	50/95	3/–	4	1,100	3,200	65	4GB5464-3CY05-0AA2	1,070	1,370	730	1,115
	20	0.4	50/95	3/–	4	800	3,300	57	4GB5464-3GY05-0AA2	1,230	1,420	740	1,130
	20	0.4	50/95	3/–	6	880	3,400	65	4GB5464-3DY05-0AA2	1,020	1,390	740	1,105
	20	0.4	50/95	3/–	6	650	3,400	57	4GB5464-3HY05-0AA2	1,190	1,430	745	1,125
	20	0.4	50/125	3/–	6	880	3,800	65	4GB5467-3DY05-0AA2	1,070	1,390	740	1,200
	30	0.4	70/145	3/–	6	1,280	4,000	67	4GB5475-3DY05-0AA2	1,190	1,450	825	1,365
(315)[4]	10	0.4	28/75	3/–	4	980	3,500	67	4GB5544-3CY05-0AA2	1,120	1,340	820	1,130
	10	0.4	28/75	3/–	4	730	3,500	59	4GB5544-3GY05-0AA2	1,400	1,400	820	1,195
	10	0.4	28/75	3/–	6	850	3,900	67	4GB5544-3DY05-0AA2	1,130	1,360	820	1,160
	10	0.4	28/75	3/–	6	670	3,700	59	4GB5544-3HY05-0AA2	1,260	1,400	820	1,170
	20	0.4	50/95	3/–	4	1,250	3,500	67	4GB5564-3CY05-0AA2	1,370	1,490	835	1,145
	20	0.4	50/95	3/–	4	930	3,500	59	4GB5564-3GY05-0AA2	1,590	1,520	835	1,205
	20	0.4	50/95	3/–	6	1,000	3,800	67	4GB5564-3DY05-0AA2	1,350	1,490	835	1,180
	20	0.4	50/95	3/–	6	780	3,800	59	4GB5564-3HY05-0AA2	1,450	1,520	840	1,205
	20	0.4	50/125	3/–	6	1,000	4,200	67	4GB5567-3DY05-0AA2	1,430	1,520	840	1,235
	30	0.4	70/145	3/–	6	1,450	4,700	69	4GB5575-3DY05-0AA2	1,460	1,510	915	1,445

[1] Applies to *U*r HV:
10 to 12 kV
20 to 24 kV
30 to 36 kV

[2] Dimension drawing: fig. 5.11-15, indications are approximate values

[3] Indication of 0.4 kV applies to the voltage range of 0.4–0.5 kV

[4] Ratings in brackets are not standardized

GEAFOL cast-resin transformers comply with IEC 60076-11, DIN EN 60076-11, EN50541-1 and VDE 0532-76-11 without housing, vector group Dyn5, 50 Hz, rated power > 3150 kVA and are not standardized. Other versions and special equipment on request.

Table 5.11-3: GEAFOL cast-resin transformers 100 to 16,000 kVA standard losses (part 1)

Rated power	Rated primary voltage[1] tapping ± 2 x 2.5 %	Rated secondary voltage[3] (no-load)	Insulation level HV (AC/LI)	Insulation level LV (AC/LI)	Impedance voltage at rated current	No-load losses	Load losses at 120 °C	Noise level	Order No.	Total weight	Length	Width	Height
S_r	U_r HV	U_r LV			u_{zr}	P_o	P_{k120}	L_{WA}		approx.	A1	B1	H1
kVA	kV	kV	kV	kV	%	W	W	dB		kg	mm	mm	mm
400	10	0.4	28/75	3/–	4	1,150	4,400	68	4GB5644-3CY05-0AA2	1,290	1,370	820	1,230
	10	0.4	28/75	3/–	4	880	4,400	60	4GB5644-3GY05-0AA2	1,500	1,390	820	1,330
	10	0.4	28/75	3/–	6	1,000	4,900	68	4GB5644-3DY05-0AA2	1,230	1,400	820	1,215
	10	0.4	28/75	3/–	6	800	4,900	60	4GB5644-3HY05-0AA2	1,390	1,430	820	1,230
	20	0.4	50/95	3/–	4	1,450	3,800	68	4GB5664-3CY05-0AA2	1,470	1,460	830	1,285
	20	0.4	50/95	3/–	4	1,100	3,800	60	4GB5664-3GY05-0AA2	1,710	1,520	835	1,305
	20	0.4	50/95	3/–	6	1,200	4,300	68	4GB5664-3DY05-0AA2	1,380	1,490	835	1,260
	20	0.4	50/95	3/–	6	940	4,300	60	4GB5664-3HY05-0AA2	1,460	1,500	840	1,260
	20	0.4	50/125	3/–	6	1,200	4,700	68	4GB5667-3DY05-0AA2	1,530	1,540	845	1,310
	30	0.4	70/145	3/–	6	1,650	5,500	69	4GB5675-3DY05-0AA2	1,590	1,560	925	1,500
(500)[4]	10	0.4	28/75	3/–	4	1,300	5,900	69	4GB5744-3CY05-0AA0	1,490	1,410	820	1,315
	10	0.4	28/75	3/–	4	1,000	5,300	61	4GB5744-3GY05-0AA0	1,620	1,420	820	1,340
	10	0.4	28/75	3/–	6	1,200	6,400	69	4GB5744-3DY05-0AA0	1,420	1,450	820	1,245
	10	0.4	28/75	3/–	6	950	6,400	61	4GB5744-3HY05-0AA0	1,540	1,490	820	1,265
	20	0.4	50/95	3/–	4	1,700	4,900	69	4GB5764-3CY05-0AA0	1,550	1,460	840	1,365
	20	0.4	50/95	3/–	4	1,300	4,900	61	4GB5764-3GY05-0AA0	1,700	1,490	845	1,370
	20	0.4	50/95	3/–	6	1,400	5,100	69	4GB5764-3DY05-0AA0	1,500	1,530	855	1,275
	20	0.4	50/95	3/–	6	1,100	5,100	61	4GB5764-3HY05-0AA0	1,670	1,560	860	1,290
	20	0.4	50/125	3/–	6	1,400	6,300	69	4GB5767-3DY05-0AA0	1,610	1,540	855	1,355
	30	0.4	70/145	3/–	6	1,900	6,000	70	4GB5775-3DY05-0AA0	1,810	1,560	925	1,615
	30	0.4	70/170	3/–	6	2,600	6,200	79	4GB5780-3DY05-0AA0	2,110	1,710	1,005	1,590
630	10	0.4	28/75	3/–	4	1,500	7,300	70	4GB5844-3CY05-0AA0	1,670	1,410	820	1,485
	10	0.4	28/75	3/–	4	1,150	7,300	62	4GB5844-3GY05-0AA0	1,840	1,440	820	1,485
	10	0.4	28/75	3/–	6	1,370	7,500	70	4GB5844-3DY05-0AA0	1,710	1,520	830	1,305
	10	0.4	28/75	3/–	6	1,100	7,500	62	4GB5844-3HY05-0AA0	1,850	1,560	835	1,330
	20	0.4	50/95	3/–	4	2,000	6,900	70	4GB5864-3CY05-0AA0	1,790	1,470	840	1,530
	20	0.4	50/95	3/–	4	1,600	6,900	62	4GB5864-3GY05-0AA0	1,930	1,520	845	1,565
	20	0.4	50/95	3/–	6	1,650	6,800	70	4GB5864-3DY05-0AA0	1,750	1,560	860	1,365
	20	0.4	50/95	3/–	6	1,250	6,800	62	4GB5864-3HY05-0AA0	1,900	1,600	865	1,385
	20	0.4	50/125	3/–	6	1,650	7,000	70	4GB5867-3DY05-0AA0	1,830	1,590	865	1,395
	30	0.4	70/145	3/–	6	2,200	6,600	71	4GB5875-3DY05-0AA0	2,090	1,620	940	1,640
800	10	0.4	28/75	3/–	4	1,800	7,800	72	4GB5944-3CY05-0AA0	1,970	1,500	820	1,535
	10	0.4	28/75	3/–	4	1,400	7,800	64	4GB5944-3GY05-0AA0	2,210	1,530	825	1,535
	10	0.4	28/75	3/–	6	1,700	8,300	72	4GB5944-3DY05-0AA0	2,020	1,590	840	1,395
	10	0.4	28/75	3/–	6	1,300	8,300	64	4GB5944-3HY05-0AA0	2,230	1,620	845	1,395
	20	0.4	50/95	3/–	4	2,400	8,500	72	4GB5964-3CY05-0AA0	2,020	1,550	850	1,595
	20	0.4	50/95	3/–	4	1,900	8,500	64	4GB5964-3GY05-0AA0	2,220	1,570	855	1,595
	20	0.4	50/95	3/–	6	1,900	8,200	72	4GB5964-3DY05-0AA0	2,020	1,610	870	1,435
	20	0.4	50/95	3/–	6	1,500	8,200	64	4GB5964-3HY05-0AA0	2,220	1,650	875	1,455
	20	0.4	50/125	3/–	6	1,900	9,400	72	4GB5967-3DY05-0AA0	2,160	1,660	880	1,485
	30	0.4	70/145	3/–	6	2,650	7,900	72	4GB5975-3DY05-0AA0	2,620	1,740	965	1,695

[1] Applies to Ur HV:
10 to 12 kV
20 to 24 kV
30 to 36 kV

[2] Dimension drawing: fig. 5.11-15, indications are approximate values

[3] Indication of 0.4 kV applies to the voltage range of 0.4–0.5 kV

[4] Ratings in brackets are not standardized

GEAFOL cast-resin transformers comply with IEC 60076-11, DIN EN 60076-11, EN50541-1 and VDE 0532-76-11 without housing, vector group Dyn5, 50 Hz, rated power > 3150 kVA and are not standardized. Other versions and special equipment on request.

Table 5.11-3: GEAFOL cast-resin transformers 100 to 16,000 kVA standard losses (part 2)

1 2 3 4 5 6 7 8 9 10 11 12 ?

Rated power	Rated primary voltage[1] tapping ± 2 x 2.5 %	Rated secondary voltage[3] (no-load)	Insulation level HV (AC/LI)	Insulation level LV (AC/LI)	Impedance voltage at rated current	No-load losses	Load losses at 120 °C	Noise level	Order No.	Total weight	Length	Width	Height
S_r	U_r HV	U_r LV			u_{zr}	P_o	P_{k120}	L_{WA}		approx.	A1	B1	H1
kVA	kV	kV	kV	kV	%	W	W	dB		kg	mm	mm	mm
1,000	10	0.4	28/75	3/–	4	2,100	10,000	73	4GB6044-3CY05-0AA0	2,440	1,550	990	1,730
	10	0.4	28/75	3/–	4	1,600	10,000	65	4GB6044-3GY05-0AA0	2,850	1,620	990	1,795
	10	0.4	28/75	3/–	6	2,000	9,500	73	4GB6044-3DY05-0AA0	2,370	1,640	990	1,490
	10	0.4	28/75	3/–	6	1,500	9,500	65	4GB6044-3HY05-0AA0	2,840	1,710	990	1,565
	20	0.4	50/95	3/–	4	2,800	9,500	73	4GB6064-3CY05-0AA0	2,420	1,570	990	1,790
	20	0.4	50/95	3/–	4	2,300	8,700	65	4GB6064-3GY05-0AA0	2,740	1,680	990	1,665
	20	0.4	50/95	3/–	6	2,300	9,400	73	4GB6064-3DY05-0AA0	2,310	1,640	990	1,620
	20	0.4	50/95	3/–	6	1,800	9,400	65	4GB6064-3HY05-0AA0	2,510	1,660	990	1,620
	20	0.4	50/125	3/–	6	2,300	11,000	73	4GB6067-3DY05-0AA0	2,470	1,670	990	1,650
	30	0.4	70/145	3/–	6	3,100	10,000	73	4GB6075-3DY05-0AA0	2,990	1,800	1,060	1,795
(1,250)[4]	10	0.4	28/75	3/–	6	2,400	11,000	75	4GB6144-3DY05-0AA0	2,780	1,740	990	1,635
	10	0.4	28/75	3/–	6	1,800	11,000	67	4GB6144-3HY05-0AA0	3,140	1,770	990	1,675
	20	0.4	50/95	3/–	6	2,700	11,200	75	4GB6164-3DY05-0AA0	2,740	1,780	990	1,645
	20	0.4	50/95	3/–	6	2,100	11,200	67	4GB6164-3HY05-0AA0	3,010	1,810	990	1,645
	20	0.4	50/125	3/–	6	2,700	10,500	75	4GB6167-3DY05-0AA0	2,980	1,810	990	1,675
	30	0.4	70/145	3/–	6	3,600	11,500	75	4GB6175-3DY05-0AA0	3,580	1,870	1,065	1,895
1,600	10	0.4	28/75	3/–	6	2,800	14,000	76	4GB6244-3DY05-0AA0	3,490	1,830	990	1,735
	10	0.4	28/75	3/–	6	2,100	14,000	68	4GB6244-3HY05-0AA0	4,130	1,880	990	1,775
	20	0.4	50/95	3/–	6	3,100	13,500	76	4GB6264-3DY05-0AA0	3,440	1,840	995	1,830
	20	0.4	50/95	3/–	6	2,400	13,500	68	4GB6264-3HY05-0AA0	3,830	1,870	1,000	1,880
	20	0.4	50/125	3/–	6	3,100	12,500	76	4GB6267-3DY05-0AA0	3,690	1,860	995	1,880
	30	0.4	70/145	3/–	6	4,100	13,500	76	4GB6275-3DY05-0AA0	4,350	1,970	1,090	1,995
(2,000)[4]	10	0.4	28/75	3/–	6	3,500	15,700	78	4GB6344-3DY05-0AA0	4,150	1,940	1,280	1,935
	10	0.4	28/75	3/–	6	2,600	15,700	70	4GB6344-3HY05-0AA0	4,890	1,970	1,280	2,015
	20	0.4	50/95	3/–	6	4,000	15,400	78	4GB6364-3DY05-0AA0	4,170	1,980	1,280	1,960
	20	0.4	50/95	3/–	6	2,900	15,400	70	4GB6364-3HY05-0AA0	4,720	2,010	1,280	1,985
	20	0.4	50/125	3/–	6	4,000	15,500	78	4GB6367-3DY05-0AA0	4,430	2,020	1,280	2,005
	30	0.4	70/145	3/–	6	5,000	15,000	78	4GB6375-3DY05-0AG0	5,090	2,100	1,280	2,135
2,500	10	0.4	28/75	3/–	6	4,300	18,700	81	4GB6444-3DY05-0AG0	4,840	2,090	1,280	2,070
	10	0.4	28/75	3/–	6	3,000	18,700	71	4GB6444-3HY05-0AA0	5,940	2,160	1,280	2,135
	20	0.4	50/95	3/–	6	5,000	18,000	81	4GB6464-3DY05-0AA0	5,200	2,150	1,280	2,165
	20	0.4	50/95	3/–	6	3,600	19,000	71	4GB6464-3HY05-0AA0	6,020	2,190	1,280	2,180
	20	0.4	50/125	3/–	6	5,000	18,000	81	4GB6467-3DY05-0AG0	5,020	2,160	1,280	2,105
	30	0.4	70/145	3/–	6	5,800	20,000	81	4GB6475-3DY05-0AG0	5,920	2,280	1,280	2,215

[1] Applies to Ur HV:
10 to 12 kV
20 to 24 kV
30 to 36 kV

[2] Dimension drawing: fig. 5.11-15, indications are approximate values

[3] Indication of 0.4 kV applies to the voltage range of 0.4–0.55 kV

[4] Ratings in brackets are not standardized

GEAFOL cast-resin transformers comply with IEC 60076-11, DIN EN 60076-11, EN50541-1 and VDE 0532-76-11 without housing, vector group Dyn5, 50 Hz, rated power > 3,150 kVA and are not standardized. Other versions and special equipment on request.

Table 5.11-3: GEAFOL cast-resin transformers 100 to 16,000 kVA standard losses (part 3)

1
2
3
4
5
6
7
8
9
10
11
12
?

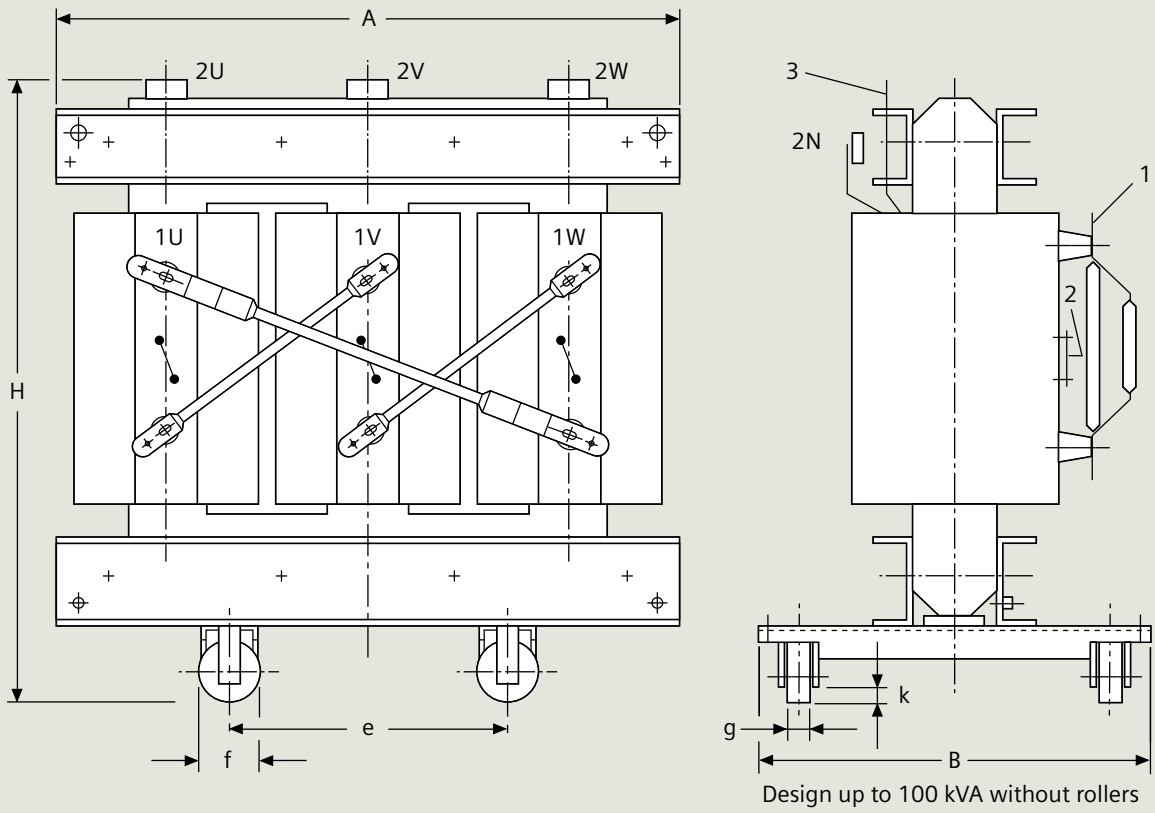

Dimension drawing
Dimensions A, B and H, see tab. 5.11-3,
Dimension e applies to lengthways and sideways travel

1 High-voltage terminals
2 High-voltage tappings on HV side
3 Low-voltage terminals

Fig. 5.11-15: Dimension drawing of GEAFOL cast-resin transformers

POWEREN.IR

1 2 3 4 5 6 7 8 9 10 11 12 ?

Rated power	Rated primary voltage[1] tapping ± 2 x 2.5 %	Rated secondary voltage[3] (no-load)	Insulation level HV (AC/LI)	Insulation level LV (AC/LI)	Impedance voltage at rated current	No-load losses	Load losses at 120 °C	Noise level	Order No.	Total weight	Length [1]	Width [1]	Height [1]
S_r	U_r HV	U_r LV			u_{zr}	P_o	P_{k120}	L_{WA}			A1	B1	H1
kVA	kV	kV	kV	kV	%	W	W	dB		approx. kg	mm	mm	mm
100	10	0.4	28/75	3/–	4	280	2,050	51	4GT50443FY	740	1,220	690	970
	20	0.4	50/95	3/–	4	280	2,050	51	4GT50643FY	860	1,240	750	1,200
160	10	0.4	28/75	3/–	4	400	2,900	54	4GT52443FY	840	1,240	695	1,100
	20	0.4	50/95	3/–	4	400	2,900	54	4GT52643FY	970	1,280	725	1,180
250	10	0.4	28/75	3/–	4	520	3,800	57	4GT54443FY	1,170	1,340	715	1,125
	20	0.4	50/95	3/–	4	520	3,800	57	4GT54643FY	1,380	1,420	750	1,225
315	10	0.4	28/75	3/–	4	650	4,500	59	4GT55443FY	1,280	1,390	820	1,115
	20	0.4	50/95	3/–	4	650	4,500	59	4GT55643FY	1,540	1,490	840	1,215
400	10	0.4	28/75	3/–	4	750	5,500	60	4GT56443FY	1,360	1,370	820	1,270
	20	0.4	50/95	3/–	4	750	5,500	60	4GT56643FY	1,600	1,450	835	1,355
500	10	0.4	28/75	3/–	4	950	6,600	61	4GT57443FY	1,540	1,430	820	1,270
	20	0.4	50/95	3/–	4	950	6,600	61	4GT57643FY	1,770	1,520	845	1,390
630	10	0.4	28/75	3/–	6	1,100	7,600	62	4GT58443EY	1,820	1,500	840	1,485
	20	0.4	50/95	3/–	6	1,100	7,600	62	4GT58643EY	1,860	1,540	870	1,505
800	10	0.4	28/75	3/–	6	1,300	8,000	64	4GT59443EY	2,190	1,600	860	1,505
	20	0.4	50/95	3/–	6	1,300	8,000	64	4GT59643EY	2,520	1,680	900	1,595
1,000	10	0.4	28/75	3/–	6	1,550	9,000	65	4GT60443EY	2,520	1,640	990	1,575
	20	0.4	50/95	3/–	6	1,550	9,000	65	4GT60643EY	2,580	1,690	990	1,635
1,250	10	0.4	28/75	3/–	6	1,800	11,000	67	4GT61443EY	3,030	1,740	990	1,695
	20	0.4	50/95	3/–	6	1,800	11,000	67	4GT61643EY	2,850	1,760	995	1,735
1,600	10	0.4	28/75	3/–	6	2,200	13,000	68	4GT6244 3EY	3,520	1,695	990	1,845
	20	0.4	50/95	3/–	6	2,200	13,000	68	4GT6264 3EY	3,710	1,755	1,005	1,895
2,000	10	0.4	28/75	3/–	6	2,600	16,000	70	4GT63443EY	4,270	1,870	1,280	1,885
	20	0.4	50/95	3/–	6	2,600	16,000	70	4GT63643EY	4,650	1,930	1,280	1,975
2,500	10	0.4	28/75	3/–	6	3,100	19,000	71	4GT64443EY	5,430	2,000	1,280	2,125
	20	0.4	50/95	3/–	6	3,100	19,000	71	4GT64643EY	5,750	2,045	1,280	2,175
3,150	10	0.4	28/75	3/–	6	3,800	22,000	74	4GT65443EY	7,080	2,140	1,280	2,435
	20	0.4	50/95	3/–	6	3,800	22,000	74	4GT65643EY	7,420	2,185	1,280	2,490

[1] Dimension drawing: fig. 5.11-16, indications are approximate values

All GEAFOL Basic transformers comply with DIN VDE 0532-76-11/DIN EN 60076-11/IEC 60076-11/DIN EN 50541-1. Power ratings >3150 kVA, different voltages and designs, as well as special equipment on request.

Table 5.11-4: GEAFOL Basic transformers according to Ecodesign Directive 2009/125/EG, EU Regulation No. 548/2014

1 2 3 4 5 6 7 8 9 10 11 12 ?

Rated power	Rated primary voltage[1] tapping ± 2 x 2.5 %	Rated secondary voltage[3] (no-load)	Insulation level HV (AC/LI)	Insulation level LV (AC/LI)	Impedance voltage at rated current	No-load losses	Load losses at 120 °C	Noise level	Order No.	Total weight	Length [1]	Width [1]	Height [1]
S_r	U_r HV	U_r LV			u_{zr}	P_o	P_{k120}	L_{WA}			A1	B1	H1
kVA	kV	kV	kV	kV	%	W	W	dB		approx. kg	mm	mm	mm
100	10	0.4	28/75	3/–	4	440	1,850	61	4GT50443CY	600	1,190	685	920
	10	0.4	28/75	3/–	4	320	1,850	51	4GT50443GY	780	1,230	690	985
	10	0.4	28/75	3/–	6	360	2,000	61	4GT50443DY	580	1,200	690	910
	10	0.4	28/75	3/–	6	290	2,000	51	4GT50443HY	710	1,210	690	1,040
	20	0.4	50/95	3/–	4	600	1,750	61	4GT50643CY	690	1,230	750	1,035
	20	0.4	50/95	3/–	4	400	1,750	51	4GT50643GY	880	1,290	760	1,085
	20	0.4	50/95	3/–	6	460	2,050	61	4GT50643DY	700	1,270	765	1,040
	20	0.4	50/95	3/–	6	340	2,050	51	4GT50643HY	780	1,260	725	1,120
160	10	0.4	28/75	3/–	4	610	2,600	65	4GT52443CY	840	1,270	700	1,005
	10	0.4	28/75	3/–	4	440	2,600	54	4GT52443GY	940	1,270	700	1,105
	10	0.4	28/75	3/–	6	500	2,750	65	4GT52443DY	790	1,280	710	980
	10	0.4	28/75	3/–	6	400	2,750	54	4GT52443HY	860	1,310	710	990
	20	0.4	50/95	3/–	4	700	2,500	65	4GT52643CY	910	1,330	770	1,085
	20	0.4	50/95	3/–	4	580	2,500	54	4GT52643GY	1,070	1,340	735	1,130
	20	0.4	50/95	3/–	6	650	2,700	65	4GT52643DY	850	1,330	775	1,075
	20	0.4	50/95	3/–	6	480	2,700	54	4GT52643HY	950	1,360	745	1,095
250	10	0.4	28/75	3/–	4	820	3,200	68	4GT54443CY	990	1,320	705	1,045
	10	0.4	28/75	3/–	4	600	3,200	57	4GT54443GY	1,140	1,340	710	1,125
	10	0.4	28/75	3/–	6	700	3,300	68	4GT54443DY	940	1,350	715	1,045
	10	0.4	28/75	3/–	6	560	3,300	57	4GT54443HY	1,100	1,380	725	1,070
	20	0.4	50/95	3/–	4	880	3,200	68	4GT54643CY	1,100	1,360	740	1,155
	20	0.4	50/95	3/–	4	800	3,300	57	4GT54643GY	1,290	1,400	745	1,210
	20	0.4	50/95	3/–	6	880	3,400	68	4GT54643DY	1,040	1,400	750	1,115
	20	0.4	50/95	3/–	6	650	3,400	57	4GT54643HY	1,180	1,430	755	1,135
315	10	0.4	28/75	3/–	4	980	3,500	68	4GT55443CY	1,150	1,370	820	1,075
	10	0.4	28/75	3/–	4	730	3,500	59	4GT55443GY	1,350	1,390	820	1,155
	10	0.4	28/75	3/–	6	850	3,900	68	4GT55443DY	1,080	1,370	820	1,120
	10	0.4	28/75	3/–	6	670	3,700	59	4GT55443HY	1,190	1,410	820	1,125
	20	0.4	50/95	3/–	4	1,250	3,500	68	4GT55643CY	1,310	1,440	835	1,190
	20	0.4	50/95	3/–	4	930	3,500	59	4GT55643GY	1,470	1,470	840	1,210
	20	0.4	50/95	3/–	6	1,000	3,800	68	4GT55643DY	1,250	1,450	840	1,200
	20	0.4	50/95	3/–	6	780	3,800	59	4GT55643HY	1,350	1,480	840	1,190
400	10	0.4	28/75	3/–	4	1,150	4,400	68	4GT56443CY	1,320	1,400	820	1,225
	10	0.4	28/75	3/–	4	880	4,400	60	4GT56443GY	1,470	1,390	820	1,325
	10	0.4	28/75	3/–	6	1,000	4,900	68	4GT56443DY	1,250	1,410	820	1,220
	10	0.4	28/75	3/–	6	800	4,900	60	4GT56443HY	1,450	1,460	820	1,240
	20	0.4	50/95	3/–	4	1,270	3,800	68	4GT56643CY	1,460	1,460	840	1,310
	20	0.4	50/95	3/–	4	1,100	3,800	60	4GT56643GY	1,670	1,520	845	1,310
	20	0.4	50/95	3/–	6	1,200	4,300	68	4GT56643DY	1,370	1,480	845	1,275
	20	0.4	50/95	3/–	6	940	4,300	60	4GT56643HY	1,540	1,530	850	1,320
500	10	0.4	28/75	3/–	4	1,300	5,900	69	4GT57443CY	1,480	1,450	820	1,180
	10	0.4	28/75	3/–	4	1,000	5,300	61	4GT57443GY	1,630	1,420	820	1,345
	10	0.4	28/75	3/–	6	1,200	6,400	69	4GT57443DY	1,390	1,450	820	1,255
	10	0.4	28/75	3/–	6	950	6,400	61	4GT57443HY	1,540	1,490	820	1,250
	20	0.4	50/95	3/–	4	1,700	4,900	69	4GT57643CY	1,650	1,510	845	1,370
	20	0.4	50/95	3/–	4	1,300	4,900	61	4GT57643GY	1,830	1,520	845	1,385
	20	0.4	50/95	3/–	6	1,400	5,100	69	4GT57643DY	1,530	1,520	855	1,270
	20	0.4	50/95	3/–	6	1,100	5,100	61	4GT57643HY	1,750	1560	860	1,355

[1] Dimension drawing: fig. 5.11-16, indications are approximate values

All GEAFOL Basic transformers comply with DIN VDE 0532-76-11/DIN EN 60076-11/IEC 60076-11/DIN EN 50541-1. Power ratings >3150 kVA, different voltages and designs, as well as special equipment on request.

Table 5.11-5: GEAFOL Basic transformers (part 1)

1 2 3 4 5 6 7 8 9 10 11 12 ?

Rated power	Rated primary voltage[1] tapping ± 2 x 2.5 %	Rated secondary voltage[3] (no-load)	Insulation level HV (AC/LI)	Insulation level LV (AC/LI)	Impedance voltage at rated current	No-load losses	Load losses at 120 °C	Noise level	Order No.	Total weight	Length [1]	Width [1]	Height [1]
S_r	U_r HV	U_r LV			u_{zr}	P_o	P_{k120}	L_{WA}			A1	B1	H1
kVA	kV	kV	kV	kV	%	W	W	dB		approx. kg	mm	mm	mm
630	10	0.4	28/75	3/–	4	1,500	7,300	70	4GT58443CY	1,660	1,460	820	1,335
	10	0.4	28/75	3/–	4	1,150	7,300	62	4GT58443GY	1,880	1,480	820	1,430
	10	0.4	28/75	3/–	6	1,370	7,500	70	4GT58443DY	1,760	1,550	835	1,350
	10	0.4	28/75	3/–	6	1,100	7,500	62	4GT58443HY	1,900	1,560	835	1,370
	20	0.4	50/95	3/–	4	2,000	6,900	70	4GT58643CY	1,900	1,550	855	1,405
	20	0.4	50/95	3/–	4	1,600	6,900	62	4GT58643GY	2,090	1,520	845	1,570
	20	0.4	50/95	3/–	6	1,650	6,800	70	4GT58643DY	1,800	1,590	865	1,370
	20	0.4	50/95	3/–	6	1,250	6,800	62	4GT58643HY	21,40	1,650	880	1,400
800	10	0.4	28/75	3/–	4	1,800	7,800	72	4GT59443CY	2,020	1,520	820	1,520
	10	0.4	28/75	3/–	4	1,400	7,800	64	4GT59443GY	2,280	1,550	830	1,540
	10	0.4	28/75	3/–	6	1,700	8,300	72	4GT59443DY	2,000	1,610	845	1,345
	10	0.4	28/75	3/–	6	1,300	8,300	64	4GT59443HY	2,240	1,640	855	1,370
	20	0.4	50/95	3/–	4	2,400	8,500	72	4GT59643CY	2,140	1,550	855	1,615
	20	0.4	50/95	3/–	4	1,900	8,500	64	4GT59643GY	2,360	1,580	860	1,605
	20	0.4	50/95	3/–	6	1,900	8,200	72	4GT59643DY	2,120	1,650	875	1,445
	20	0.4	50/95	3/–	6	1,500	8,200	64	4GT59643HY	2,340	1,670	885	1,450
1000	10	0.4	28/75	3/–	4	2,100	10,000	73	4GT60443CY	2,560	1,600	990	1,635
	10	0.4	28/75	3/–	4	1,600	10,000	65	4GT60443GY	2,980	1,640	990	1,745
	10	0.4	28/75	3/–	6	2,000	9,500	73	4GT60443DY	2,390	1,620	990	1,580
	10	0.4	28/75	3/–	6	1,500	9,500	65	4GT60443HY	2,650	1,660	990	1,560
	20	0.4	50/95	3/–	4	2,800	9,500	73	4GT60643CY	2,580	1,590	990	1,790
	20	0.4	50/95	3/–	4	2,300	8,700	65	4GT60643GY	2,860	1,630	990	1,810
	20	0.4	50/95	3/–	6	2,300	9,000	73	4GT60643DY	2,460	1,660	990	1,645
	20	0.4	50/95	3/–	6	1,800	9,000	65	4GT60643HY	2,760	1,700	990	1,680
1250	10	0.4	28/75	3/–	6	2,400	11,000	78	4GT61443DY	2,710	1,720	990	1,655
	10	0.4	28/75	3/–	6	1,800	11,000	68	4GT61443HY	3,220	1,780	990	1,715
	20	0.4	50/95	3/–	6	2,700	11,200	78	4GT61643DY	2,850	1,780	990	1,695
	20	0.4	50/95	3/–	6	2,100	11,200	68	4GT61643HY	3,150	1,800	990	1,710
1600	10	0.4	28/75	3/–	6	2,800	13,600	76	4GT62443DY	2,970	1,705	990	1,710
	10	0.4	28/75	3/–	6	2,100	13,600	68	4GT62443HY	3,340	1,745	990	1,730
	20	0.4	50/95	3/–	6	3,100	13,200	76	4GT62643DY	3,200	1,765	1,010	1,810
	20	0.4	50/95	3/–	6	2,400	13,200	68	4GT62643HY	3,570	1,800	1,015	1,860
2000	10	0.4	28/75	3/–	6	3,500	15,500	78	4GT63443DY	3,640	1,805	1,280	1,815
	10	0.4	28/75	3/–	6	2,600	15,500	70	4GT63443HY	4,090	1,855	1,280	1,850
	20	0.4	50/95	3/–	6	3,900	15,800	78	4GT63643DY	3,700	1,785	1,280	2,025
	20	0.4	50/95	3/–	6	2,900	15,800	70	4GT63643HY	4,070	1,820	1,280	2,055
2500	10	0.4	28/75	3/–	6	4,300	20,000	81	4GT64443DY	4,380	1,895	1,280	2,045
	10	0.4	28/75	3/–	6	3,000	20,000	71	4GT64443HY	5,030	1,920	1,280	2,085
	20	0.4	50/95	3/–	6	4,400	19,000	81	4GT64643DY	4,590	1,900	1,280	2,150
	20	0.4	50/95	3/–	6	3,500	19,000	71	4GT64643HY	5,070	1,990	1,280	2,135

[1] Dimension drawing: fig. 5.11-16, indications are approximate values

All GEAFOL Basic transformers comply with DIN VDE 0532-76-11/DIN EN 60076-11/ IEC 60076-11/DIN EN 50541-1. Power ratings >3150 kVA, different voltages and designs, as well as special equipment on request.

Table 5.11-5: GEAFOL Basic transformers (part 2)

1
2
3
4
5
6
7
8
9
10
11
12

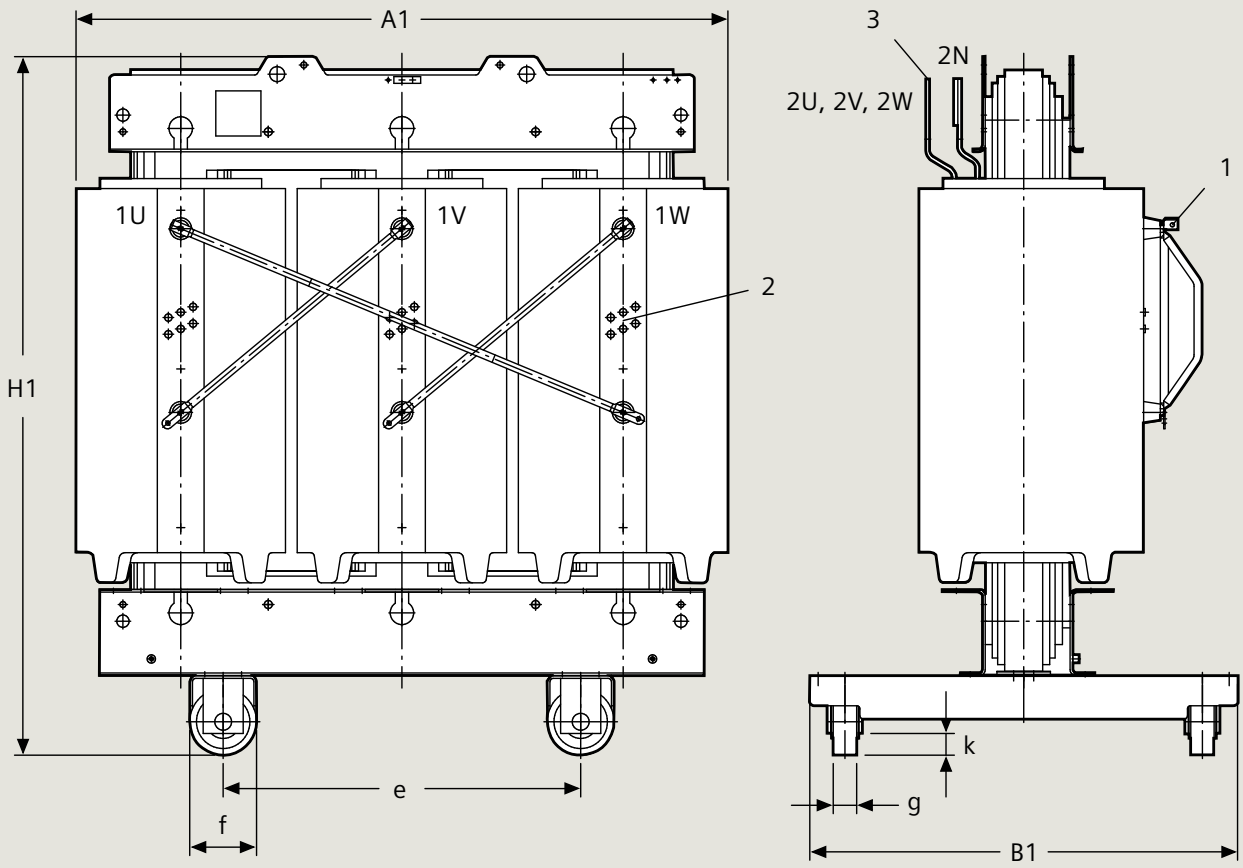

Dimension drawing

Dimensions A1, B1 and H1, see tab. 5.11-4, 5.11-5
Dimension e applies to longitudinal and transverse travel

1 High-voltage terminals
2 High-voltage tappings on HV terminal side
3 Low-voltage terminals

Fig. 5.11-16: Dimension drawing of GEAFOL Basic transformer

Notes

The technical data, dimensions and weights are subject to change unless otherwise stated on the individual pages of this catalog. The illustrations are for reference only.
All product designations used are trademarks or product names of Siemens AG or of other suppliers.
All dimensions in this catalog are given in mm.
The information in this document contains general descriptions of the technical options available, which do not always have to be present in individual cases. The required features should therefore be specified in each individual case at the time of closing the contract.

1
2
3
4
5
6
7
8
9
10
11
12
?

5.12 Traction transformers

Siemens produces transformers for railway applications, called traction transformers. These transformers are installed in electric cars such as high-speed trains, electric multiple units (EMUs), and electric locomotives (table 5.12-1). Their main purpose is transform the overhead contact line voltage, which range mainly from 15 kV up to 25 kV, to voltages suitable for traction converters (between 0.7 kV and 1.5 kV) (fig. 5.12-1).

Siemens develops and produces traction transformers for rolling stock applications of all relevant ratings, voltage levels, and customer-specific requirements.

All products are optimized with regard to individual customer requirements such as:
- Frequency, rating and voltage
- Required dimensions and weights
- Losses and impedance voltage characteristics
- Operational cycles and frequency response behavior
- Environmental requirements.

Characterization

Technically, traction transformers are in general characterized as follows:
- 1-phase transformers
- Ratings up to 10 MVA and above
- Operating frequencies from 16⅔ to 60 Hz
- Voltages: 1.5 kV DC, 3 kV DC, 15 kV, 25 kV, 11.5 kV, or other specific solutions
- Weight: < 15 t
- Auxiliary windings and/or heater windings according to customer specification
- Single or multiple system operation
- Under floor, machine room, or roof assembly
- Traction windings to be used as line filters
- Integrated absorption circuit reactors

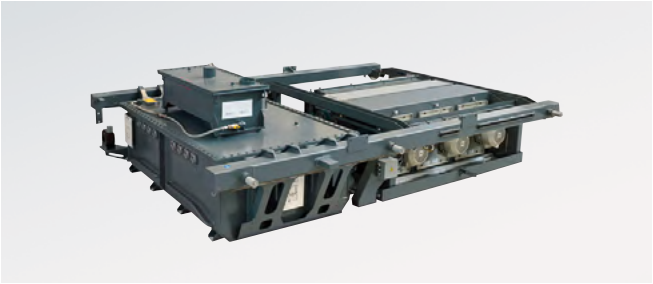

Fig. 5.12-1: Traction transformer for high-speed trains

- Various cooling media for all ratings: mineral oil, silicone or ester fluid for highest environmental compatibility.

In case of customer request:
- With cooling plant – integrated in one frame together with the transformer or stand-alone solution
- Nomex insulation for highest energy density.

Head End Power (HEP) transformers

HEP transformers are used in diesel locomotives for vehicle power supply. With ratings up to 1.3 MVA, the units include tank, pump and bushings.

Insulation oil alternatives:
- Ester fluid (Midel 7131) (water pollution class 0 with highest environmental compatibility)
- Mineral oil
- Silicone liquid
- Transformer weight up to 2 t.

Velaro Eurostar	Vectron MS (Multisystem locomotive)	ICE 4	
Number of cars: 16 Number of seats: more than 900 Max. speed: 320 km/h Voltage supply: 25 kV AC and 1.5/3 kV DC Max. traction power: 16,000 kW Length of train: 400 m	Max. speed: 160/200 km/h Voltage supply: 15 kV AC, 16.67 Hz ; 25 kV AC, 50 Hz; 3 kV DC; 1.5 kV DC Max. traction power: 6,400 kW/300 kN Weight: 87 t	Number of cars: 7 Number of seats: 456 Max speed: 230 km/h Voltage supply: 15 kV AC, 16.67 Hz 25 kV AC, 50 Hz 1.5 kV DC; 3.0 kV DC Max. traction power: 4.95 MW Length of train: 200 m	12 830 250 km/h 15 kV AC, 16.67 Hz 9.9 MW 346 m

Table 5.12-1: Siemens develops and produces traction transformers for rolling stock applications of all relevant ratings and voltage levels

5.13 Transformer lifecycle management

Introduction

Power transformers usually perform their work, humming quietly for decades, without any interruption. Operators have thus come to rely on their solid transformer capacity, often performing only minimal maintenance using traditional techniques.

Today, load requirements, additional environmental constraints, and recent corporate sustainability objectives to keep a close eye on the operational value of the equipment, have led Siemens to provide a comprehensive set of solutions to keep the equipment at peak level under any operational circumstances. A new generation of asset managers is interested in the "operational" value, including the replacement cost, instead of the depreciated book-value over decades, which is often close to zero.

Power transformers are long-lasting capital investment goods. Purchasing and replacement require long periods of planning engineering and procurement. Each individual conception is specially adapted to the specific requirements. The corresponding high replacement value, and the important lead time are in the focus.

What is TLM™?

Siemens Transformer Lifecycle Management™ (TLM™) includes highly experienced transformer experts who provide the most effective lifecycle solutions for power transformers of any age and any brand (fig. 5.13-1).

Maintaining the operator's power transformers at peak operating level is the prime objective of the Siemens TLM set of solutions. Siemens TLM is based on the expertise available in all Siemens transformer factories, which are well-known for high quality and low failure rates. The TLM scope of services is explained in the following briefly:

Conditon assessment and diagnostics (fig. 5.13-2)

- Level 1: SITRAM® DIAG ESSENTIAL
- Level 2: SITRAM® DIAG ADVANCED
- Level 3: SITRAM® DIAG HIGH-VOLTAGE TESTING.

The SITRAM® DIAG program consists of three levels, and provides diagnostic modules for individual transformers and for the assessment of complete installed fleets and transformer populations.

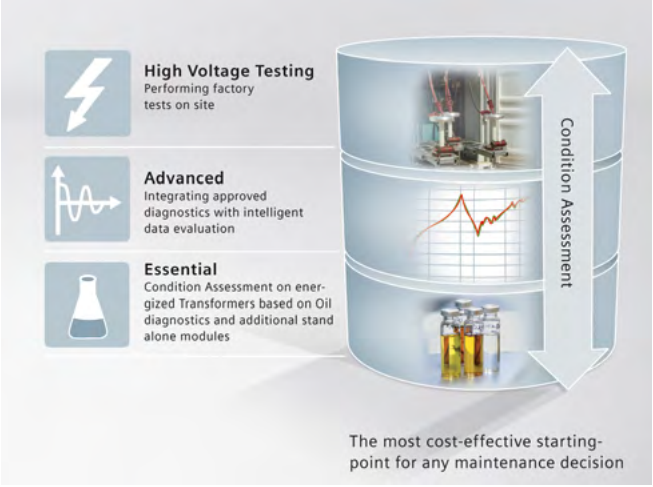

Fig. 5.13-2: SITRAM® DIAG provides diagnostic modules for individual transformers and for the assessment of complete fleets

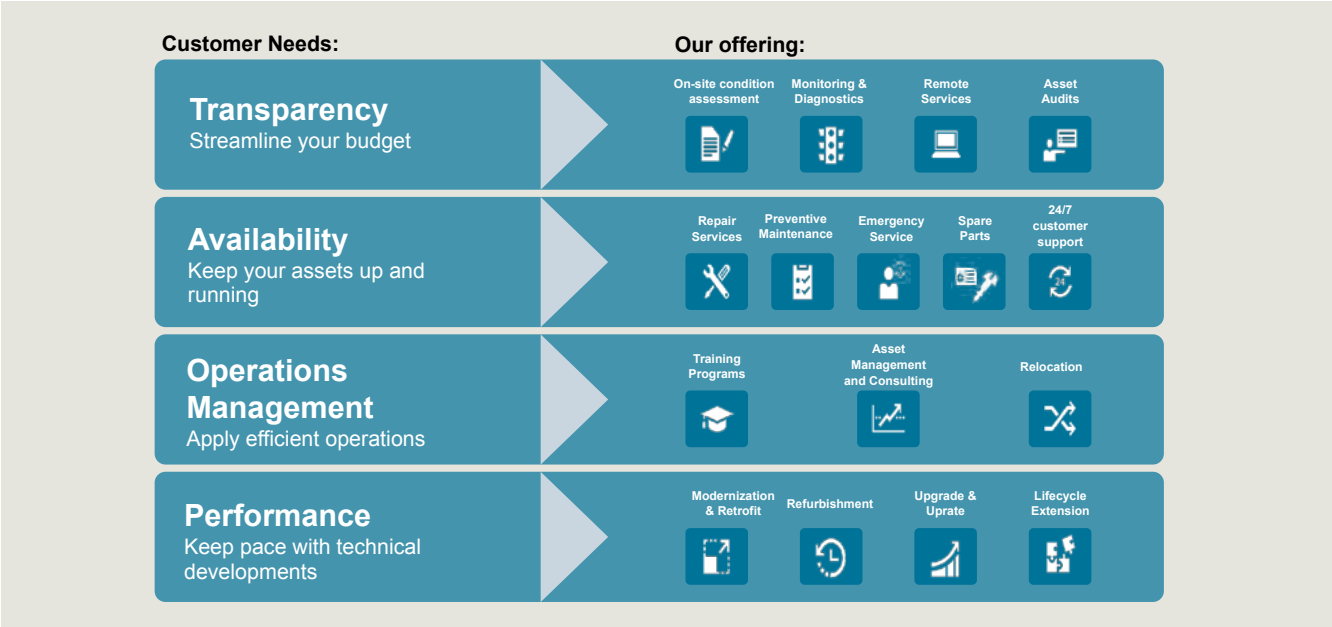

Fig. 5.13-1: Overview of Transformer Lifecyle Management services

1
2
3
4
5
6
7
8
9
10
11
12
?

SITRAM® DIAG ESSENTIAL (Level 1)
All modules in the diagnosis level 1 "ESSENTIAL" are to be applied on energized transformers. The most powerful toolbox for this application is the diagnosis of the insulating liquid. Additional stand-alone modules are available to be applied when the oil tests and/or the operating personnel informs about deficiencies or changes.

- Standard oil test (8 –12 parameters)
- Dissolved gas in oil analysis (DGA)
- Furanic components
- Moisture.

Additional stand-alone modules:

- PD (UHF, acoustic sensors, corona camera)
- Noise measurement
- Vibration measurement
- Thermograph scans.

SITRAM® DIAG ADVANCED (Level 2)
The extended modules are applied on de-energized and disconnected transformers. Most measurements repeat the measurements as shown in the manufacturer's test report, and by comparing the results any differences will be highlighted. Level 2 provides information about the insulation (dielectric) condition as well as the mechanical condition (displacements) of the active part of a transformer.

- Ratio and phase angle
- Winding resistance
- C-tan delta (windings and bushings)
- Insulation resistance
- Polarization index (PI)
- Impedance
- No load current and losses
- At low voltage
- FDS/PDC
- FRA.

SITRAM® DIAG HIGH-VOLTAGE TESTING (Level 3)
High-voltage tests on site are usually required following on-site repairs, factory repairs, refurbishment or relocation, and are also performed to assure the results from the level 1 and level 2 assessments. The SITRAM DIAG mobile test field provides solutions for all kind of HV testing and loss measurement. Heat runs or long duration tests are feasible depending on size and voltage level of the transformer under test. Level 3 assessment can be combined with all modules out of level 1 and level 2.

- Load losses
- No-load losses and currents
- Applied overvoltage tests
- Induced overvoltage tests
- Partial discharge testing
- DC testing
- Heat runs
- Long duration tests.

The Siemens Assetguard Online Monitoring range provides compatible, modular and customized solutions for individual power transformers (new and retrofit), and solutions for entire transformer fleets.

In general, these systems allow a continuous monitoring of power transformers, which go far beyond the traditional method of taking offline measurements. The experience demonstrates clearly that, with online monitoring, an improved efficiency in the early detection of faults can be achieved, so that curative and corrective maintenance actions can be planned and scheduled well in advance. It is also possible to use spare capacities up to the limits. This results in a higher reliability, efficiency, and longer service life of power transformers.

Siemens Assetguard for Transformers: SITRAM sensors
The family of sensors includes standardized, proven online sensor technologies as stand-alone solutions for individual transformers. Different kinds of warning instruments alert staff if deviations develop that might lead to failures or unplanned downtimes. This applies also if diagnostic or repair measures become necessary. There are four main groups for monitoring sensors:

- DGA monitoring
- OLTC monitoring
- BUSHING monitoring
- PD monitoring.

The top-down priority of the used sensors is to the experience with failure rates of transformers subsystems.

Siemens Assetguard Online Monitoring:
SITRAM CM and TMDS
Experience has shown that early detection of arising failures is simply not possible without online monitoring. It allows measures for troubleshooting and repair to be planned and scheduled in advance, which means greater availability and a longer service life of transformers.

The SITRAM CM and TMDS are modular and customizable systems which integrate information from single stream sensors for each transformer individually, and are able to provide condition information about all key components. A local data storage module and a communication interface enable the user to access the information remotely.

1
2
3
4
5
6
7
8
9
10
11
12
?

SITRAM fleet monitoring

For a fleet monitoring approach the control system SICAM230 of Siemens is used. All possible subsystem sensors of any type or make, as well as any I/O devices can be integrated. For effective information interchange, all necessary protocols to the overlaying SCADA system can be provided. That approach is shown in fig. 5.13-3.

In case of critical transformers and difficult decisions, automated systems and algorithms are of limited use so far. Siemens TLM experts via remote access, or experts in a central control room can in case of raised alarms recommend subsequent actions to local service personal. The status information management is optimally supported by the SITRAM CAM.

SITRAM Condition Assessment Monitor (CAM)
The SITRAM CAM (fig. 5.13-4) solution makes it possible to systematically evaluate individual transformers, and thus to render all transformers in the database comparable with each other. A score is assigned based on standardized criteria. Three categories are visualized in the "stoplight" colors.

Inspection findings are described in detail, and recommendations regarding measures to be initiated are generated.

Consulting expertise and training

- Engineering service
- Advice and recommendations
- Educational seminars
- Customer-tailored workshops or trainings.

The Siemens TLM set of solutions integrates a wide range of services that are designed to considerably extend the life of the operator's transformers. Siemens' preferred approach is to integrate all transformers – of any age and any brand – in the plan that is prepared for the respective customers, so that they can make the best decision about replacement/extension and any related matters. Siemens TLM also offers a series of standardized customer trainings. These programs are specifically designed to broaden the operator's awareness of the various concept and design options. Lifecycle management is, of course, an integral part of the training.

Maintenance and lifecycle extension

- Preventive and corrective maintenance
- On site active part drying and de-gassing
- Oil regeneration
- Life extension products
- End of life management.

Siemens gets transformers back in top form – and without service interruptions. The TLM™ products for extending service life minimize the unavoidable, undetectable and ongoing aging process that is taking place inside transformers. These internationally recognized technologies for life extension are rounded up by a cooling efficiency retrofit solution.

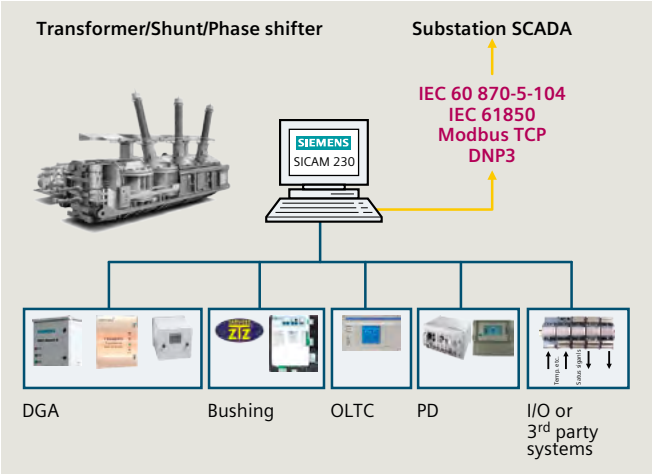

Fig. 5.13-3: System platform

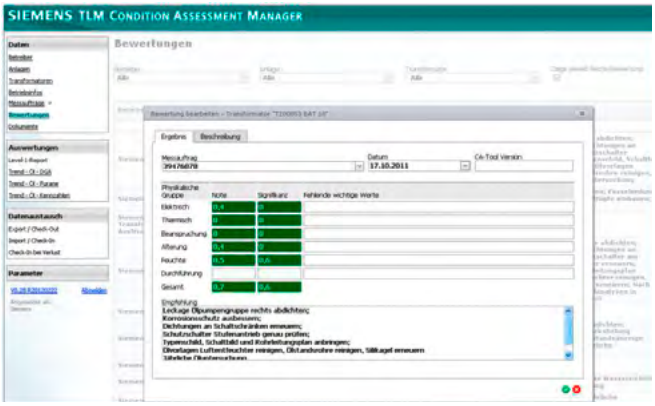

Fig. 5.13-4: Screenshot of the German CAM system in use

1
2
3
4
5
6
7
8
9
10
11
12
?

SITRAM DRY

The SITRAM® DRY (fig. 5.13-5) is an advanced technology for preventive and continuous online transformer drying. The system removes moisture from the insulation oil by disturbing the moisture equilibrium, so that moisture diffuses from the wet insulation paper to the dried insulation oil. This process will remove the moisture in a gentle and smooth way from the solid insulation, and will increase the dielectric strength of the insulating oil.

- Continuous online removal of moisture from solid insulation and oil
- Based on a molecular sieve technology
- Easy to install on any transformer in operation
- Temperature and moisture monitoring
- Cartridge replacement and regeneration service
- Cabinet version
- SITRAM® DRY: smart, mobile solution for distribution transformers.

SITRAM REG

Siemens developed the SITRAM® REG technology to clean contaminated oil and restore its dielectric properties. SITRAM® REG is a modified reclamation process based on the IEC 60422 standard. Oil is circulated continuously through regeneration columns.

- An oil change is not required
- Improves the quality of insulating oil to that of new oil
- Prolongation of the lifetime, and increased reliability of old transformers
- Preventive action against the progressive insulation aging process
- Sustainable improvement in the condition of the insulation
- Suitable for all power transformers
- Economically independent of the current price of new oil
- No service interruptions
- Great and long-lasting cleaning effect
- New: removal of corrosive sulfur.

Fig. 5.13-5: Cabinet version of SITRAM DRY equipped with a control module

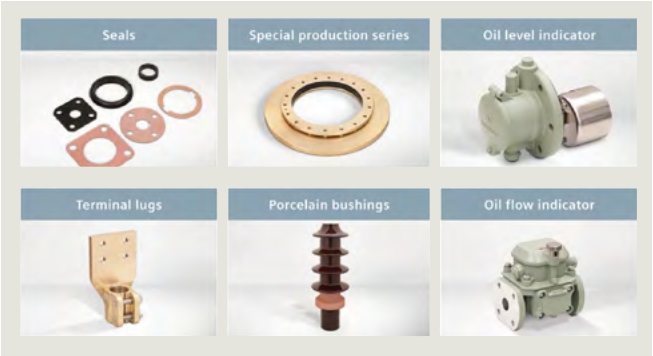

Fig. 5.13-6: Maximizing the availibility of every transformer with the TLM™ spare part program

Spare parts and accessories

Specific planning and punctual delivery of quality spare parts and components – Siemens TLM fulfills the complete needs of system operators, with the aim of maximizing the availability of every transformer, minimizing downtimes, and reducing the total costs involved.

Spare parts from Siemens TLM™ offer (fig. 5.13-6):

- Stringent quality assurance standards to ensure that spare parts are manufactured in accordance with the Siemens specifications
- Continuous improvement of technology and materials
- Outage planning and support based on customized spare parts programs
- Spare parts service for all transformers in the Siemens family (SIEMENS, Trafo-Union, VA TECH, ELIN, PEEPLES, Volta, AEG)
- Spare parts service for transformers from other manufacturers (ABB, BBC, Hyundai, Tamini, SEA, ASA, Alstom, Greta, etc.)
- Spare parts service for distribution and transmission transformers.

1
2
3
4
5
6
7
8
9
10
11
12
?

In order to provide the best solution, Siemens TLM™ will verify alternative products and strive to make technical improvements using state-of-art technologies, which is especially important when original spare parts are no longer available. Upon request, Siemens may advise system operators on what accessories will best fit their needs.

Examples include:
- Protection devices
- Bushings
- Gaskets
- Cooling systems
- Pumps
- OLTCs
- Any other exchangeable parts of the transformer.

What you can expect from Siemens:
- Higher availability and reliability
- Longer inspection intervals
- Lower costs due to longer lifetime
- Higher safety in the business
- Lower failure costs thanks to an immediate spare part supply.

Repair and retrofit

Can Siemens make an old transformer as good as new? Siemens can come very close and usually improve old transformers with new state-of-the-art technologies. One highlight of TLM™ is the repair, overhaul and modernization of power transformers. Repairs are performed in one of Siemens' dedicated repair shops around the world, but are also done on site when mobile Siemens workshops come to the customer's facility. In addition, Siemens can retrofit or modernize transformers in various ways.

Whether the operator's transformer has failed or timely corrective maintenance is planned, the Siemens TLM™ team of experts is available for short-term repairs.

With its dedicated repair facilities at our technology center in Nuremberg, Germany, and elsewhere around the world, Siemens has created a professional setting to get the customers' transformers back into shape. Even the largest and heaviest transformers in the world can be easily moved, inspected and repaired.

The repair facilities handle all problems that arise over the lifecycle of a transformer, including installation of new on-load tap changers and tapping switches, increasing performance, as well as complete replacement of windings. In addition, all components can be reconditioned and retrofitted with the latest materials as needed. For everything from design to the latest modern winding techniques, as well as to final inspection and testing, the manufacturing processes at Siemens' renowned transformer plants are continuously being improved. These improvements support the maintenance and repair of the customers' transformers (fig. 5.13-7).

Fig. 5.13-7: Repair shop in Nuremberg, Germany

Transport, installation and commissioning

Siemens technical experts and engineers, who work on projects that include installing new transformers or changing the locations of old transformers, have decades of experience. They are expert at disassembly and preparation for transport, storage, and handling of delicate components. Assembly is the daily work of these Siemens experts, and Siemens offers its exhaustive experience for complete customer solutions, so that their equipment value remains at its peak for a long time.

For more information, please contact our Transformer Lifecycle Management:

Tel.: +49 911 434 2200
E-Mail: tlm@siemens.com
siemens.com/energy/TLM

6 Protection, substation automation, power quality and measurements

6.1	**Protection, substation automation, power quality and measurements**	**323**
6.2	**Protection systems**	**324**
6.2.1	SIPROTEC and Reyrolle relay families	325
6.2.2	Applications	343
6.2.3	Protection coordination	355
6.3	**Substation automation**	**364**
6.3.1	Overview and solutions	364
6.3.2	SICAM PAS and SICAM SCC	369
6.3.3	SICAM Remote Terminal Units (RTUs)	374
6.3.4	Short-circuit indicators	377
6.4	**Power quality and measurements**	**380**
6.4.1	Power meter	386
6.4.2	SICAM T – electrical measurement transducer	389
6.4.3	Power quality and monitoring	390
6.4.4	SIPROTEC 7KE85 – Fault recorder	393
6.4.5	System software	395
6.4.6	SIGUARD PDP – Phasor data processor	398
6.5	**Protection and substation communication**	**402**
6.5.1	Protocols	402
6.5.2	Multiple communication options with SIPROTEC 5	405
6.5.3	Topologies	407
6.5.4	Transfer of data via the protection communication	411
6.6	**Efficient network and energy automation systems**	**413**
6.6.1	Solutions for substation automation and protection	414
6.6.2	Solutions for distribution automation	421
6.6.3	Solutions for industry grids	424
6.6.4	Solutions for monitoring and control center	427

6.1 Protection, substation automation, power quality and measurements

The demands on substation automation solutions are continually growing, which leads to greater complexity and more interfaces. High availability, with all individual components working together smoothly, is one of the most important system operator needs in the area of energy automation.

And that is exactly where energy automation products and solutions from Siemens come in. With a comprehensive approach to the entire automation chain, the system operator gets an overview of the entire plant, from planning and start up to operation and maintenance.

Energy automation products and solutions are based on three main pillars that ensure simple operation:
- Reliable IT security through high-quality applications and seamless network structures
- Limitless communications by means of international standards and flexible expandability
- Efficient engineering for the entire automation chain, from the control center to the field device.

Energy automation from Siemens stands for a simplified workflow, reliable operations, and a significantly lower total cost of ownership. Siemens offers expert solutions that will continue to grow with the market's demands, but still remain manageable. That is how energy automation sets a new benchmark with products and solutions which are clearly simpler and more efficient. In the meantime, Siemens has delivered more than 300,000 devices, with IEC 61850 included.

Energy automation that simply works
Siemens offers a uniform, universal technology for the entire functional scope of secondary equipment, both in the construction and connection of the devices, and in their operation and communication. This results in uniformity of design, coordinated interfaces, and the same operating principle being established throughout, whether in power system and generator protection, in measurement and recording systems, in substation control and protection, or in telecontrol.

The devices are highly compact and immune to interference, and are therefore also suitable for direct installation in switchgear panels.

Complete technology from one partner
Siemens Energy Sector supplies devices and systems for:
- Power system protection SIPROTEC and Reyrolle
- Substation control and automation SICAM
- Remote control (RTUs)
- Measurement and recording SICAM.

This technology covers all of the measurement, control, automation and protection functions for substations.

Furthermore, Siemens' activities include:
- Consulting
- Planning
- Design
- Commissioning and service.

This uniform technology from a single source saves the user time and money in the planning, assembly and operation of substations.

Fig. 6.1-1: Siemens energy automation products

1
2
3
4
5
6
7
8
9
10
11
12
?

6.2 Protection systems

Siemens is one of the world's leading suppliers of protection equipment for power systems. Thousands of Siemens relays ensure first-class performance in transmission and distribution systems on all voltage levels, all over the world, in countries with tropical heat or arctic frost. For many years, Siemens has also significantly influenced the development of protection technology:

- In 1976, the first minicomputer (process computer)-based protection system was commissioned: A total of 10 systems for 110 / 20 kV substations was supplied and is still operating satisfactorily today.
- In 1985, Siemens became the first company to manufacture a range of fully numerical relays with standardized communication interfaces. Siemens now offers a complete range of protection relays for all applications with numerical busbar and machine protection.

Section 6.2.1 gives an overview of the various product lines of Siemens protection (fig. 6.2-2, see next page).

Section 6.2.2 offers application examples for typical protection schemes such as:

- Cables and overhead lines
- Transformers
- Motors and generators
- Busbars.

To ensure a selective protection system, section 6.2.3 gives hints for coordinated protection setting, and selection of instrument transformers.

1
2
3
4
5
6
7
8
9
10
11
12
?

6.2.1 SIPROTEC and Reyrolle relay families

Solutions for today's and future power grids – for more than 100 years

SIPROTEC has established itself on the energy market for decades as a powerful and complete system family of numerical protection relays and bay controllers from Siemens.

SIPROTEC protection relays from Siemens can be consistently used throughout all applications in medium and high voltage. With SIPROTEC, operators have their systems firmly and safely under control, and have the basis to implement cost-efficient solutions for all duties in modern, intelligent and "smart" grids. Users can combine the units of the different SIPROTEC device series at will for solving manifold duties – because SIPROTEC stands for continuity, openness and future-proof design.

As the innovation driver and trendsetter in the field of protection systems for 100 years, Siemens helps system operators to design their grids in an intelligent, ecological, reliable and efficient way, and to operate them economically. As a pioneer, Siemens has decisively influenced the development of numerical protection systems (fig. 6.2-1). The first application went into operation in Würzburg, Germany, in 1977. Consistent integration of protection and control functions for all SIPROTEC devices was the innovation step in the 90s. After release of the communication standard IEC 61850 in 2004, Siemens was the first manufacturer worldwide to put a system with this communication standard into operation.

How can system operators benefit from this experience?

- Proven and complete applications
- Easy integration into your system
- Highest quality of hardware and software
- Excellent operator friendliness of devices and tools
- Easy data exchange between applications
- Extraordinary consistency between product and system engineering
- Reduced complexity by easy operation
- Siemens as a reliable, worldwide operating partner.

The products of the long-standing British manufacturer Reyrolle are considered especially powerful and reliable by many markets. With the latest numerical products, Reyrolle – as a part of Siemens – shows that the development is being pushed forward, and that new innovations are continuously being advanced for the users' benefit. In this way, Reyrolle completes the offerings for protection devices, particularly in Great Britain and the Commonwealth countries.

Fig. 6.2-1: Siemens protection family

For further information please visit:
siemens.com/protection

History of SIPROTEC

1910 First use of hinged-armature relays in differential protection

1925 First overcurrent relay RA1 and delayed action relay RS1

1940 Introduction of new overcurrent relay RA5

1970 Introduction of analog electronic relays

1977 First digital application in Würzburg, Germany

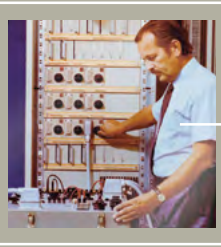

1980 The digital era for relays begins

1985 Introduction of first numerical relay in combination with control technology SINAUT LSA

1998 Introduction of SIPROTEC 4 family

2004 Siemens installs the world's first substation with IEC 61850-based control in Winznau Schachen, CH

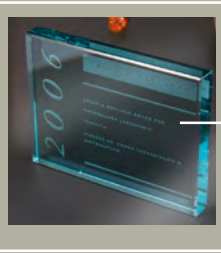

2006 Siemens awarded the Frost & Sullivan »Technology Leadership Award« for the implementation of IEC 61850

2008 SIPROTEC Compact, the new member of the SIPROTEC family, is introduced

2010 More than one million SIPROTEC devices provide protection according to customer demands

2012 SIPROTEC 5 defines a new global benchmark in functional integration and modularity

Fig. 6.2-2: SIPROTEC – pioneer over generations

1
2
3
4
5
6
7
8
9
10
11
12
?

SIPROTEC Compact – maximum protection, minimum space

Reliable and flexible protection for energy distribution and industrial systems with minimum space requirements. The devices of the SIPROTEC Compact family offer an extensive variety of functions in a compact and thus space-saving 1/6 x 19" housing. The devices can be used as main protection in medium-voltage applications, or as backup protection in high-voltage systems.

SIPROTEC Compact provides suitable devices for many applications in energy distribution, such as the protection of feeders, lines or motors. Moreover, it also performs tasks such as system decoupling, load shedding, load restoration, as well as voltage and frequency protection.

The SIPROTEC Compact series (fig. 6.2-3 to fig. 6.2-5) is based on millions of operational experience with SIPROTEC 4 and a further-developed, compact hardware, in which many customer suggestions were integrated. This offers maximum reliability combined with excellent functionality and flexibility.

- Simple installation by means of pluggable current and voltage terminal blocks
- Thresholds adjustable via software (3 stages guarantee a safe and reliable recording of input signals)
- Easy adjustment of secondary current transformer values (1 A / 5 A) to primary transformers via DIGSI 4
- Quick operations at the device by means of 9 freely programmable function keys
- Clear overview with six-line display
- Easy service due to buffer battery replaceable at the front side
- Use of standard cables via USB port at the front
- Integration in the communication network by means of two further communication interfaces
- Integrated switch for low-cost and redundant optical Ethernet rings
- Ethernet redundancy protocols RSTP, PRP and HSR for highest availability
- Reduction of wiring between devices by means of cross-communication via Ethernet (IEC 61850 GOOSE)
- Time synchronization to the millisecond via Ethernet with SNTP for targeted fault evaluation
- Adjustable to the protection requirements by means of “flexible protection functions”
- Comfortable engineering and evaluation via DIGSI 4.

Fig. 6.2-3: SIPROTEC Compact

Fig. 6.2-4: SIPROTEC Compact – rear view

Fig. 6.2-5: Feeder automation relay SIPROTEC 7SC80

1
2
3
4
5
6
7
8
9
10
11
12
?

Reyrolle – the alternative solution for the distribution system

Reyrolle has been synonymous with electrical protection devices in the sectors of sub-transmission, distribution, and industrial applications for decades. Historically, Reyrolle relays, initially sold mainly in traditional markets, are now sold worldwide as part of the Siemens protection network.

Since its foundation, Reyrolle has been an innovation driver in product development – based on a strong focus on market, customer and technology. Worldwide established brand names such as "Solkor" and "Argus" (fig. 6.2-6 and fig. 6.2-7) demonstrate this. But there is more: A wide range of Reyrolle products has determined technological firsts in the market.

The comprehensive range of Reyrolle products provides the total protection requirements of distribution markets – ranging from overcurrent protection via transformer protection and voltage control to a full spectrum of auxiliary and trip relays. The portfolio includes many famous products such as "Argus", "Duobias", "Solkor", "Rho", etc.

To serve specific needs in industrial applications, a range of proven products such as "Argus overcurrent", "Solkor line differential", and "Rho motor protection devices" is offered.

Through successive generations, Reyrolle numerical products have been developed to increase value to system operators. This increase in value is the result of consistent development:

- Ease-of-use as a principle – the products allow flexible, easy operation through high user friendliness.
- One size fits all – the latest generation of numerical products features 1A/5A CT Input, and some models are provided with universal DC supplies.
- Learn once, know all – the new product generation provides a similar look and feel as earlier products. If Reyrolle numerical devices have been previously used, there is a high consistency in both programming and interrogation.
- With Reydisp Evolution, a comprehensive software support toolkit for relay setting, fault interrogation and general system information is provided. It is backward-compatible with all previous Reyrolle numerical devices.
- IEC 61850 communication interface option.

Fig. 6.2-6: Front view of Argus 7SR210

Fig. 6.2-7: Rear view of Argus 7SR210

1
2
3
4
5
6
7
8
9
10
11
12
?

SIPROTEC 5 – the new benchmark for protection, automation and monitoring of grids

The SIPROTEC 5 series is based on the long field experience of the SIPROTEC device series, and has been especially designed for the new requirements of modern high-voltage systems. For this purpose, SIPROTEC 5 is equipped with extensive functionalities and device types. With the holistic and consistent engineering tool DIGSI 5, a solution has also been provided for the increasingly complex processes, from the design via the engineering phase up to the test and operation phase.

Thanks to the high modularity of hardware (fig. 6.2-8 and fig. 6.2-9) and software, the functionality and hardware of the devices can be tailored to the requested application (fig. 6.2-10) and adjusted to the continuously changing requirements throughout the entire lifecycle.

Besides the reliable and selective protection and the complete automation function, SIPROTEC 5 offers an extensive database for operation and monitoring of modern power supply systems. Synchrophasors (PMU), power quality data, and extensive operational equipment data are part of the scope of supply.

- Powerful protection functions guarantee the safety of the system operator's equipment and employees
- Individually configurable devices save money on initial investment as well as storage of spare parts, maintenance, expansion, and adjustment of your equipment
- Clear and easy-to-use of devices and software thanks to user-friendly design
- Increase of reliability and quality of the engineering process
- High reliability due to consequent implementation of safety and security
- Powerful communication components guarantee safe and effective solutions
- Full compatibility between IEC 61850 Editions 1 and 2
- Integrated switch for low-cost and redundant optical and electrical Ethernet rings
- Ethernet redundancy protocols RSTP, PRP and HSR for highest availability
- Efficient operating concepts by flexible engineering of IEC 61850 Edition 2
- Comprehensive database for monitoring of modern power grids
- Optimal smart automation platform for grids based on integrated synchrophasor measurement units (PMU) and power quality functions.

Fig. 6.2-8: SIPROTEC 5 – modular hardware

Fig. 6.2-9: SIPROTEC 5 – rear view

Fig. 6.2-10: Application in the high-voltage system

1
2
3
4
5
6
7
8
9
10
11
12
?

Innovation highlights
With SIPROTEC 5, Siemens has combined a functionality that has been proven and refined over years with a high-performance and flexible new platform, extended with trendsetting innovations for present and future demands.

Holistic workflow
End-to-end engineering from system design to operation simplifies throughout the entire process.

The highlight of SIPROTEC 5 is the greater-than-ever emphasis on daily ease of operation. SIPROTEC 5 provides support along all the steps in the engineering workflow, allowing for system view management and configuration, down to the details of individual devices, saving time and cost without compromising quality (fig. 6.2-11).

Holistic workflow in SIPROTEC 5 means:
- Integrated, consistent system and device engineering – from the single-line diagram of the unit all the way to device parameterization
- Simple, intuitive graphical linking of primary and secondary equipment
- Supplied application templates for the most frequently used applications
- IEC 61850 system configurator for manufacturer-independent system engineering
- Open interfaces for seamless integration into your process environment
- Integrated tools for testing during engineering, commissioning, and for simulating operational scenarios, such as system incidents or switching operations.

For system operators, holistic workflow in SIPROTEC 5 means:
An end-to-end tool from system design to operation – even allowing crossing of functional and departmental boundaries – saves time, and assures data security and transparency throughout the entire lifecycle of the system.

Perfectly tailored fit
Individually configurable devices provide system operators with cost-effective solutions that match the needs precisely throughout the entire lifecycle.

With its innovative modular and flexible hardware, software and communication, SIPROTEC 5 sets new standards in cost saving and availability. SIPROTEC 5 provides a "perfectly tailored fit" for the system operator's switchgear and applications, unparalleled by any other system.

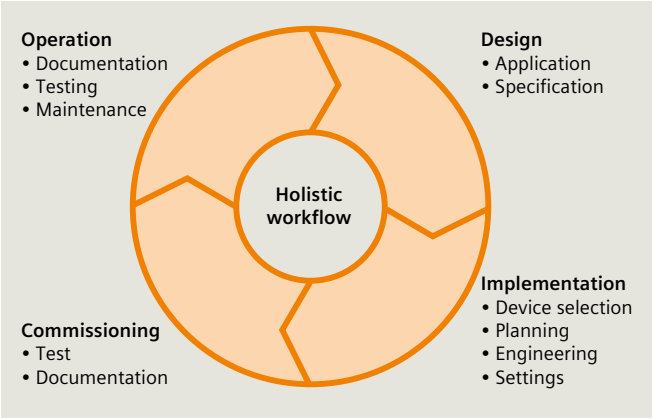

Fig. 6.2-11: End-to-end tools – from design to operation

Perfectly tailored fit in SIPROTEC 5 means:
- Modular system design in hardware, software and communication ensures the perfect fit for your needs
- Functional integration of a wide range of applications, such as protection, control, measurement, power quality, or fault recording
- The same expansion and communication modules for all devices in the family
- Innovative terminal technology ensures easy assembly and interchangeability with the highest possible degree of safety
- Identical functions and consistent interfaces throughout the entire system family mean less training requirement and increased safety, e.g., an identical automatic reclosing (AREC) for line protection devices SIPROTEC 7SD8, 7SA8, 7SL8
- Functions can be individually customized to the user's specific requirements
- Innovations are made available to all devices at the same time and can easily be retrofitted as needed via libraries.

For system operators, perfectly tailored fit with SIPROTEC 5 means:
Individually configurable devices save money in the initial investment, spare parts storage, maintenance, extension, and adaptation of systems.

Smart automation for grids
Climate change and dwindling fossil fuels are forcing a total re-evaluation of the energy supply industry, from generation to distribution and consumption. This is having fundamental effects on the structure and operation of the power grids.

Smart automation, the intelligent power automation system, is a major real-time component designed to preserve the stability of these grids and at the same time conserve energy and reduce costs.

With SIPROTEC 5 and the unique spectrum of integrated functionality, Siemens provides the optimum smart automation platform for your Smart Grid.

Smart automation for grids in SIPROTEC 5 means

- Open, scalable architecture for IT integration and new functions
- "Smart functions", e.g., for power system operation, analysis of faults or power quality (power systems monitoring, power control unit, fault location)
- Integrated automation with optimized logic modules based on the IEC 61131-3 standard
- Highly precise acquisition and processing of process values and transmission to other components in the Smart Grid
- Protection, automation and monitoring in the Smart Grid.

Functional integration

Due to the modular design of the hardware and software, as well as the powerful engineering tool DIGSI 5, SIPROTEC 5 is ideally suitable for protection, automation, measurement and monitoring tasks for the operation and monitoring of modern power systems.

The devices are not only pure protection and electronic control units; their performance enables them to assure functional integration of desired depth and scope. For example, they can also serve to concurrently perform monitoring, synchrophasor measurement (phasor measurement), powerful fault recording, a wide range of measuring functions, and much more, and they have been designed to facilitate future extensions.

SIPROTEC 5 provides an extensive, precise data acquisition and bay level recording for these functions. Combined with its communication flexibility, this expands the field of application and opens up a wide variety of possibilities in meeting requirements for present and future power systems. With SIPROTEC 5, system operators are on the safe side for their application. The following figure shows the possible functional expansion of a SIPROTEC 5 device (fig. 6.2-12).

Functional integration – Protection

SIPROTEC 5 provides all the necessary protection functions to address reliability and security of power systems. System configurations in multiple-busbar and breaker-and-a-half layouts are both supported. The functions are based on decades of experience in putting systems into operation, including suggestions from our customers.

The modular, functional structure of SIPROTEC 5 allows exceptional flexibility. It perfectly matches the protection functionality to the conditions of the system, and is still capable of further changes in the future.

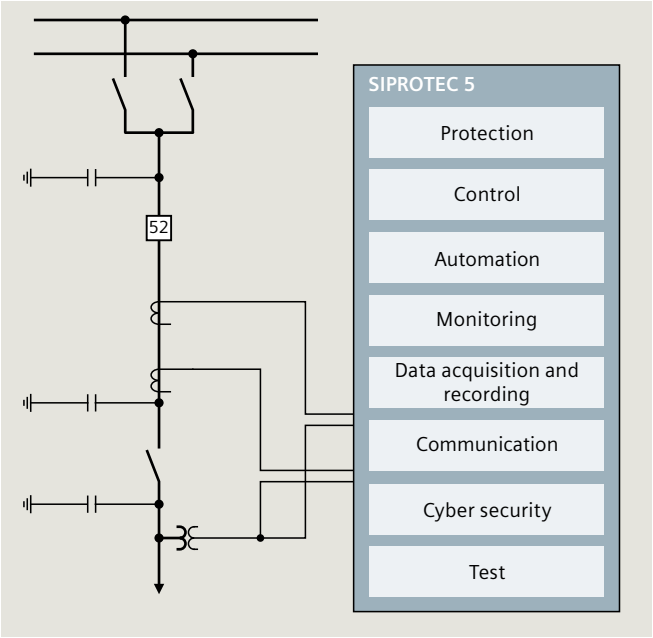

Fig. 6.2-12: Possible functional expansion of SIPROTEC 5 devices

Functional integration – Control

SIPROTEC 5 includes all bay level control and supervision functions that are required for efficient operation of the switchgear. The large, freely configurable graphics display for control diagrams is available for convenient local control. Frequent operating actions, such as starting switching sequences or displaying the message list, can be called up via one of the 9 function keys. The required security is guaranteed by the key switches for local/remote and interlocked / uninterlocked switchover.

The application templates supplied provide the full functionality that you need for your application. Protection and control functions access the same logical elements. From the perspective of switching devices, protection and control are treated with equal priority.

The modular, scalable hardware can be optimized for the system conditions. You can easily put together the desired hardware quantity structure. For example, a single SIPROTEC 5 device can be used to control and monitor an entire breaker-and-a-half diameter.

A new level of quality in control is achieved with the application of the communication standard IEC 61850. For example, binary information from the bay can be processed very elegantly, and data (such as for interlocking across multiple feeders) can be exchanged between the devices. Cross-communications via GOOSE enable efficient solutions, since here the wiring is replaced with data telegrams.

All devices already have up to 4 switching objects (switches, disconnectors or grounding switches) via the base control package. Optionally, additional switching objects and switching sequence blocks (CFC switching sequences) can be activated.

Functional integration – Automation
The integrated CFC (Continuous Function Chart) graphical automation editor enables system operators to create logic diagrams in a clear a simple way. DIGSI 5 supports this with powerful logic blocks based on the standard IEC 61131-3. All devices already include a powerful base automation package. This makes it easy to provide specific functions for automating a switchgear.

Various stages of expansion for the continuous function charts are available for the realization of your solutions.
- Function chart (CFC) basic
- Function chart (CFC) arithmetic.

With the basic CFC package, all internal digital information, such as internal protection signals or operation states, can be graphically linked directly to the logic blocks and processed in real time. With the arithmetic CFC package, measured values can also be linked or monitored with respect to limiting values.

Examples of automation applications are:
- Interlocking checks
- Switching sequences
- Message derivations, or the tripping of switching operations
- Messages or alarms by linking available information
- Load shedding in a feeder
- Management of decentralized energy feeds
- System transfers depending on the network status
- Automatic power power system shutdowns in the event of power-system stability problems.

Of course, SIPROTEC 5 provides a substation automation system –such as SICAM PAS/PQS – with all necessary information, thus ensuring consistent, integrated and efficient solutions for further automation.

Functional integration – Monitoring
SIPROTEC 5 devices can take on a wide variety of monitoring tasks. These can be divided into four groups:
- Self-monitoring
- Monitoring power-system stability
- Monitoring of power quality
- Monitoring of equipment (condition monitoring).

Self-monitoring
SIPROTEC 5 devices are equipped with many self-monitoring procedures. These detect both internal and external faults in secondary circuits, store them in logs, and report them. This information is used to record the device fault and helps to determine the cause of the error in order to take appropriate corrective actions.

Monitoring of power grid stability
Grid monitoring combines all of the monitoring systems that are necessary to assure grid stability during normal grid operation. SIPROTEC 5 provides all necessary functionalities, e.g., fault recorders, continuous recorders, fault locators, and phasor measurement units (PMUs) for grid monitoring.

This functionality allows to monitor power-system limit violations (such as dynamic stability assessment via load angle control) and actively trigger the appropriate responses. This data in the network control systems can also be used as input variables for online power-flow calculation, and it enables significantly faster response if statuses in the power system change.

Monitoring of power quality
Besides availability, consumers utlimately demand that the electrical energy they receive is also of high quality. The increasing use of power electronic components can have loading effects on power quality. Poor power quality can cause interruptions, production outages, and high follow-up costs. Accordingly, it is essential to evaluate the power-system variables reliably according to generally valid quality criteria as defined in EN 50160. For this, SIPROTEC 5 provides corresponding power quality recorders, for example, SIPROTEC 7KE85. These can be used to detect weak points early so that corrective measures can be taken. The large volume of data is archived centrally and analyzed neatly with a SICAM PQS system.

Monitoring of equipment
Condition monitoring is an important tool in asset management and operational support, from which both the environment and the company can benefit. Equipment that typically requires monitoring includes, for example: circuit-breakers, transformers, and gas compartments in gas-insulated switchgear (GIS).

The measuring transducer inputs (0 mA to 20 mA) enable connection to various sensors, and monitoring of non-electrical variables, such as gas pressure, gas density, temperature. Thus, SIPROTEC 5 enables a wide range of monitoring tasks to be carried out.

SIPROTEC 5 provides the process interfaces, logs, recorders and automation functions necessary for equipment monitoring:
- Process values are stored together with a time stamp in the operational log
- Circuit-breaker statistics provide essential data for condition-based maintenance of switchgear
- Process variables (for example, pressure, SF_6 loss, speed and temperature) are monitored for limit violations via measuring transducers connected to the sensors
- Using external 20 mA or temperature measurement devices that are connected serially or by Ethernet, other measured values can be captured and processed.

Functional integration – data acquisition and recording
The recorded and logged field data is comprehensive. It represents the image and history of the field, and is also used by the functions in the SIPROTEC 5 device for monitoring, interbay and substation automation tasks. Thus, this data forms the basis both for the functions available today and for future applications.

Functional integration – communication
SIPROTEC 5 devices are equipped with high-performance communication interfaces. These are integrated interfaces, or interfaces that are extendable with plug-in modules to provide a high level of security and flexibility. There are various communication modules available. At the same time, the module is independent of the protocol used. This can be loaded according to the application. Particular importance was given to the realization of full communication redundancy:

- Several serial and Ethernet-based communication interfaces
- A large number of serial and Ethernet-based logs (for example, IEC 60870-5-103, DNP3 serial and TCP, Modbus TCP, IEC 60870-5-104, and IEC 61850 Ed1 and Ed2)
- Full availability of the communication ring when the switchgear is enabled for servicing operations
- Ethernet redundancy protocols PRP and HSR
- A large number of plug-in modules having various communication protocols.

Functional integration – cyber security
Safety for personnel and equipment are first priority, but availability is also critically important. And as the plant landscape becomes more and more open and complex, the conventional security mechanisms are no longer adequate.

For this reason, a security concept has been implemented in the SIPROTEC 5 device architecture that is designed to address the multi-dimensional aspects of security in a holistic approach.

Multi-layer safety mechanisms in all links of the system safety chain provide the highest possible level of safety and availability.

Safety and cyber security include:

- Security concept in device design
- Information security against IT attacks (IT threats from the outside).

Functional integration – testing
SIPROTEC 5 devices are equipped with extensive test and diagnostic functions. These are available to users in SIPROTEC 5 in conjunction with DIGSI 5, and they shorten the testing and commissioning phase significantly.

The DIGSI 5 test suite offers:

- Simulation of binary signals and analog sequences to be integrated in the test equipment

Fig. 6.2-13: SIPROTEC 5 device with built-in modules

- Hardware and wiring test
- Testing device functionality and protection functions
- Circuit-breaker test and AR test functions
- Communication test including loop test
- Analysis of logic diagrams.

The engineering, including the device test, can therefore be done with one tool.

Hardware building blocks – flexible and modular
The SIPROTEC 5 hardware building blocks offer a freely configurable device. Users have the choice:
Either to use a preconfigured device with a quantity structure already tailored to the specific application, or to build up their own device from the extensive SIPROTEC 5 hardware building blocks to exactly fit the specific application.

The flexible hardware building blocks offer:

- Base modules and expansion modules, each with different I/O modules
- Various on-site operation panels
- A large number of modules for communication and measured value conversion.

Flexible and modular
With SIPROTEC 5, Siemens has also taken a new path with the design. Proven elements have been improved and innovative ideas have been added. When looking at the new devices, the modular structure is evident. In this way, the scope of the process data can be adapted flexibly to the requirements in the switchgear assembly. Users have the choice: Either to use a preconfigured device with a quantity structure already tailored to the specific application, or to build up their own device from the extensive SIPROTEC 5 hardware building blocks to exactly fit the specific application. Preconfigured devices can be extended or adapted as needed.

With the devices SIPROTEC 7xx85, 7xx86 and 7xx87, it is also possible to combine different base and expansion modules, add communication modules, and select an installation variant that fits the space available. The devices SIPROTEC 7xx82 can not be extended with expansion modules.

With this modular principle, any desired quantity structures can be implemented. In this way, hardware that is tailored to the application can be selected. Fig. 6.2-13 shows a modular device consisting of a base module and 4 expansion modules.

The advantage of modular building blocks
The SIPROTEC 5 hardware module building blocks provides the cumulative experience of Siemens in digital protection devices and bay controllers. In addition, specific innovations were realized that make the application easier for users, e.g., recorder and PQ functionalities.

The SIPROTEC 5 hardware building blocks offer:

Durability and reliability
- Tailored hardware extension
- Robust housings
- Excellent EMC shielding in compliance with the most recent standards and IEC 61000-4
- Extended temperature range
  –25 °C to + 70 °C/–13 °F to + 158 °F.

Modular principle
- Freely configurable and extendable devices
- Large process data range (up to 40 current and voltage transformers for protection applications and up to 8 for central busbar protection, as well as more than 200 inputs and outputs for recording applications possible)
- Operation panel that is freely selectable for all device types (e.g., large or small display, with or without key switches, detached operation panel)
- Identical wiring of flush-mounting and surface-mounting housings.

User-friendly operation panel
- 9 freely assignable function keys for frequently required operator control actions
- Separate control keys for switching commands
- Context-sensitive keys with labeling in the display
- Complete numeric keypad for simple entry of setting values and easy navigation in the menu
- Up to 80 LEDs for signaling, 16 of which are in two colors.

Application-friendly design
- No opening of device necessary for installation and servicing:
  – Easy battery replacement on the back of the device
  – Simple exchange of communication modules with plug-in technology
  – Electronically settable (no jumpers) threshold for binary inputs

Fig. 6.2-14: Rear view of base module with 4 expansion modules

  – Rated current (1 A / 5 A) of current transformer inputs configurable electronically
- Removable terminal blocks
  – Pre-wiring of terminals is possible
  – Simple replacement of current transformers, e.g., with sensitive ground current transformers for network conversions
  – Increased safety, since open current transformer circuits are no longer possible (safety CT plug).

Base and expansion modules
A SIPROTEC 5 device consists of a base module, up to 9 expansion modules, and a power supply module for the optional second row. Base and expansion modules are distinguished firstly by their width. The base module is 1/3 x 19" wide. Located on the rear panel are process connections and space for up to two plug-in modules. The expansion modules and the power supply for the second row are each 1/6 x 19" wide. Expansion modules can provide either additional process connections or communication connections, and are available for the devices 7xx85, 7xx86, 7xx87 and 6MD8.

Fig. 6.2-14 shows the rear side of a device consisting of a base module in which the power supply, the CPU module, and an I/O board are permanently installed, as well as 4 expansion modules for extending the I/O quantity structure, and communication modules. Each expansion module contains an I/O board. The components are connected by bus connector plugs and mechanical interlockings.

Such a device can be ordered preconfigured from the factory. In this context, a choice can be made between the standard variants predefined by Siemens and the devices the user has combined on his own. Every SIPROTEC 5 device can also be converted or extended according to the user's wishes. The modular concept absolutely ensures that the final device meets all standards, particularly with regard to EMC and environmental requirements.

On-site operation panels

The on-site operation panel is a further component within the SIPROTEC 5 modular system. This allows to combine a base or expansion module with a suitable front operation panel, according to the requirements. The modular system offers 3 different on-site operation panels for selection, both for base modules and for expansion modules.

The following variants are available for base modules (fig. 6.2-15):

- With a large display, keypad and 16 two-colored LEDs
- With a small display, keypad and 16 two-colored LEDs
- 16 two-colored LEDs.

The following variants are available for expansion modules (fig. 6.2-16):

- Without operating or control elements
- With 16 LEDs (single-colored)
- With 16 LEDs (single-colored) and key switch.

The SIPROTEC 5 module is flexible with regard to selection of the operation panel. It is possible to order any device type with a large, graphical display or with a smaller, economical standard display. For applications without device operation, an operation panel without display is also available. The operation panel with a small display includes seven lines for measured values or menu texts, as well as the graphic representation of, for example, a single busbar. All operation and control keys are available to the user, i.e., he can also control switching devices.

Fig. 6.2-15: Operation panels with (from left) large and small display, and operation panel without display

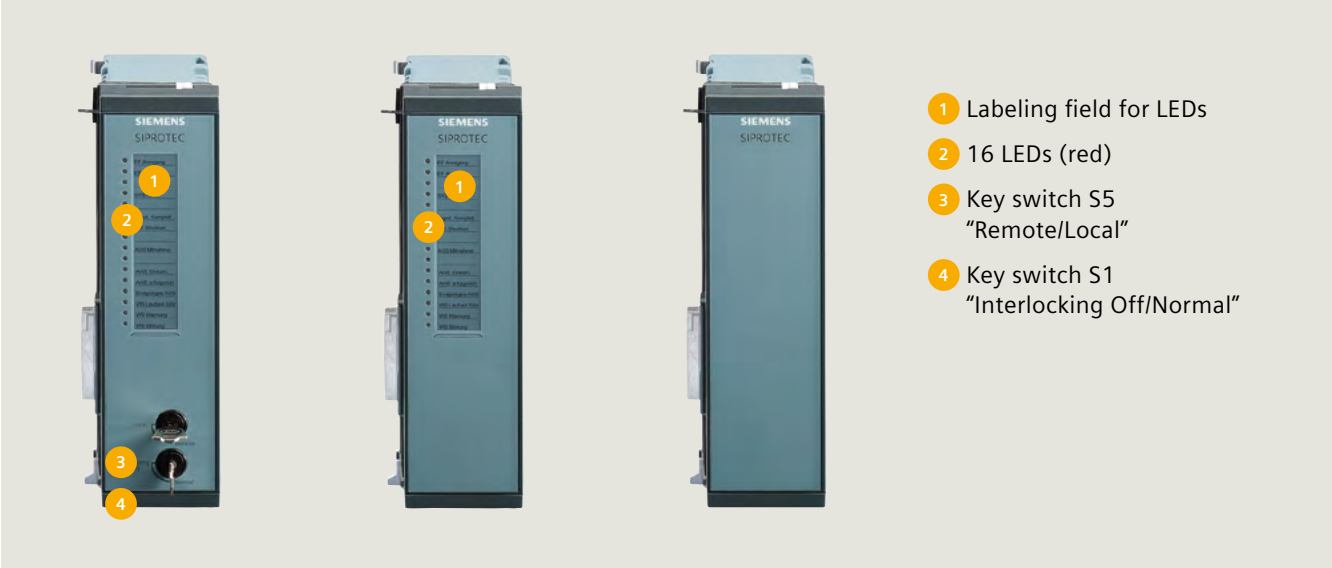

Fig. 6.2-16: Designs of the expansion modules with key switches, LEDs and push buttons

Elements of the on-site operation panels

The operator elements are illustrated with the example of the on-site operation panel with a large display.

The central element is the generously sized display for text and graphics. With its high resolution, it creates ample space for symbols in graphical representations (fig. 6.2-17).

Below the display there is a 12 key keypad. The combination of 4 navigation keys and 2 option keys provides everything required in order to navigate conveniently and quickly through all information that is shown in the display. 2 LEDs on the upper border of the operation panel inform about the current device operating state.

16 additional LEDs, to the left of the keypad, ensure quick, targeted process feedback. The USB interface enables fast data transfer. It is easily accessible from the front and well protected with a plastic cover.

The operation panel (fig. 6.2-18) with large display can also show a complex control display, thus offering more room for measured values and the display of event lists. This operation panel is therefore the first choice for bay controllers, busbar protection, or combined protection and electronic control units. As a third option, an economical variant is available without keypad and display. This variant is appropriate for devices that are seldom or never used by the operational crew.

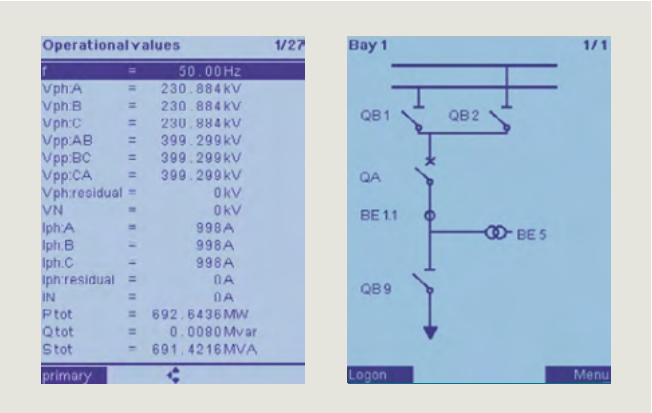

Fig. 6.2-17: Display of measured values in the large display

The keys O and I (red and green) for the direct control of equipment, a reset button for the LEDs, and the CTRL key for activating the system diagram complete the operation panel.

Options

Any SIPROTEC 5 device can be ordered, regardless of its individual configuration, in 3 different installation variants:

- As flush-mounting device
- As surface-mounting device with integrated on-site operation panel
- As surface-mounting device with the on-site operation panel detached.

The construction of the flush-mounting devices will be recognizable from the previous sections. A brief introduction to the two other variants is given hereafter.

1. Large graphical display
2. Labeling field for LEDs
3. 16 LEDs (green or red, settable parameters)
4. 16 LEDs (red)
5. LED reset
6. USB interfaces
7. Labeling field for function keys
8. Numerical keys and function keys
9. Control/command keys
10. Context-sensitive keys
11. Cursor keys
12. Key switch S5 “Remote / Local”
13. Key switch S1 “Interlocking Off / Normal”

Fig. 6.2-18: SIPROTEC 5 operation panel

Surface-mounting device with integrated on-site operation panel
For wall installation, the SIPROTEC 5 devices can be ordered in the surface-mounting housing (fig. 6.2-19). Thanks to a new concept, these devices have terminal connection diagrams that are identical to the corresponding flush-mounting devices. This is achieved by installing the devices using the principle "with the face to the wall" and then attaching the operation panels to the terminal side. With the brackets that are used, sufficient space remains for the wiring, which can be routed away upwards and downwards.

Surface-mounting device with the on-site operation panel detached
If the operation panel is to be installed detached from the device, it can be installed as a separate part and connected to the device with a 2.5 or 5 m long connecting cable. In this way, the SIPROTEC 5 device can be situated, for example, in the low-voltage fixture, and the operation panel can be installed precisely at the correct working height in the cabinet door. In this case, the device is fastened like a surface-mounting device on the cabinet wall. An opening in the door must be provided for the operation panel (fig. 6.2-20).

Fig. 6.2-19: Device in the surface-mounting housing with integrated operation panel

Fig. 6.2-20: Device with detached operation panel

Integrated interfaces

USB connections on the front side
The device can be accessed with the operating program DIGSI 5 by plugging a standard USB cable into the USB-B socket on the front side of the base module. The complete configuration and setting of the device can be carried out via this point-to-point connection.

Integrated interfaces on the rear panel of the base module
The base module offers various permanently installed interfaces on the rear panel. For even greater flexibility, 2 slots are available for plug-in modules. For this, the connection diagrams in the attachment must be observed.

Integrated Ethernet interface (RJ45)
This electrical RJ45 interface serves to connect DIGSI 5 via a local Ethernet network. In this way, several devices can be operated from DIGSI 5 via one external switch. DIGSI 5 detects the devices even without an IP configuration on the local network, and can then assign them network addresses.

Optionally, the protocol IEC 61850 can be activated on this interface for connections up to 6 clients. With the 7Sx82 devices and SIPROTEC 5 with CP300, GOOSE messages are also supported on this interface.

Time-synchronizing interface (port G)
Via the 9-pole Sub-D socket (connection compatible with SIPROTEC 4), the time in the device can be synchronized. The set clock telegram IRIG-B005 (007) of a GPS receiver can be fed with 5 V, 12 V or 24 V levels. In addition, the Central European DCF77 format with summer and winter time changes is supported. An additional second pulse input enables microsecond-precise synchronization of the device from a highly precise time source, e.g., a special GPS receiver. This accuracy is needed for special protection and measuring tasks. In this way, devices can be precisely synchronized to the microsecond supra-regionally. For this, Siemens provides a prefabricated complete solution with time receiver, fiber-optic converters, and appropriate connection cables.

Connecting a detached operation panel (port H)
A detached operation panel provided together with the connection cable can be connected to this interface. The maximum distance is 2.5 or 5 meters.

Connecting the expansion unit CB202 (RJ45)
The base module offers slots for 2 plug-in modules. If more plug-in modules are needed, these can be provided via a special expansion module CB202. This module is connected via RJ45. The expansion module is delivered with an appropriate cable and is connected with the RJ45 on the base module. The CB202 has its own wide-range power supply unit. A great advantage here is that the switch integrated in an Ethernet module can execute its data forwarding function for neighboring devices even if the power supply of the base device is switched off, provided the CB202 is still powered. Thus, an Ethernet ring is not broken when one device is in service.

Via plug-in modules, the devices can be extended with protocol interfaces and analog inputs. The devices can be ordered with assembled modules or be extended with modules retroactively.

An expansion module CB202 can also be assembled with plug-in modules. The modules are easy to service and can be plugged in without having to open the device. Since the modules have their own processor, the basic functions of the device, for example, the protection functions and the protocol application, are largely independent.

Modules are delivered without configured protocols or applications. One or more appropriate modules are suggested in the order configurator corresponding to the desired protocol on a module. There are serial modules with 1 or 2 electrical and optical interfaces. Different applications can run on both interfaces, for example, synchronous protection communication of a differential protection on one interface and an IEC 60870-5-103 protocol on the second interface. Electrical and optical modules for Ethernet are still available. For example, the IEC 61850 protocol as well as auxiliary services may be executed for each module.

The SIPROTEC 5 terminals
Innovative terminals offering many advantages were developed for the SIPROTEC 5 family. All terminals are individually removable (Fig. 6.2-21). This enables pre-wiring of the systems, as well as simple device replacement without costly re-wiring.

Current terminals
The 8-pole current terminal with 4 integrated current transformers is available in 3 designs:
- 4 protection-class current transformers
- 3 protection-class current transformers + 1 sensitive protection-class current transformer
- 4 instrument transformers.

The terminal design enables the following advantages for the connection of currents:
- Exchange of the current transformer type also possible retroactively on site (e.g., protection-class current transformer for instrument transformer, sensitive for normal ground current transformers in cases of network conversions)
- Additional safety during tests or device replacement, since the secondary current transformer circuits always remain closed.

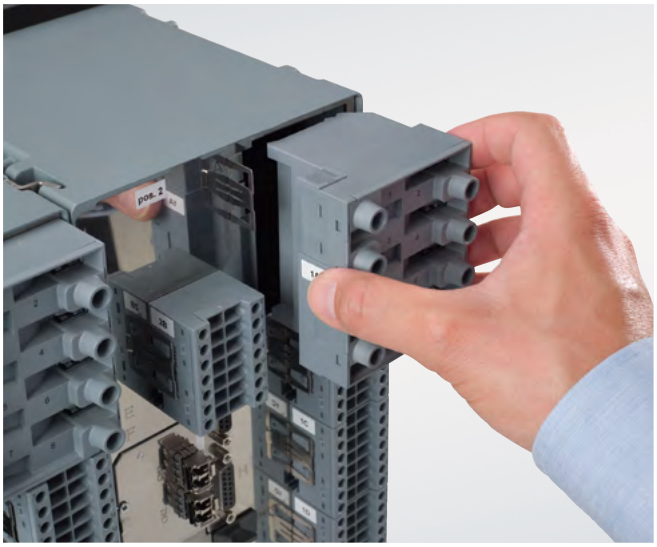

Fig. 6.2-21: Removed current terminal block

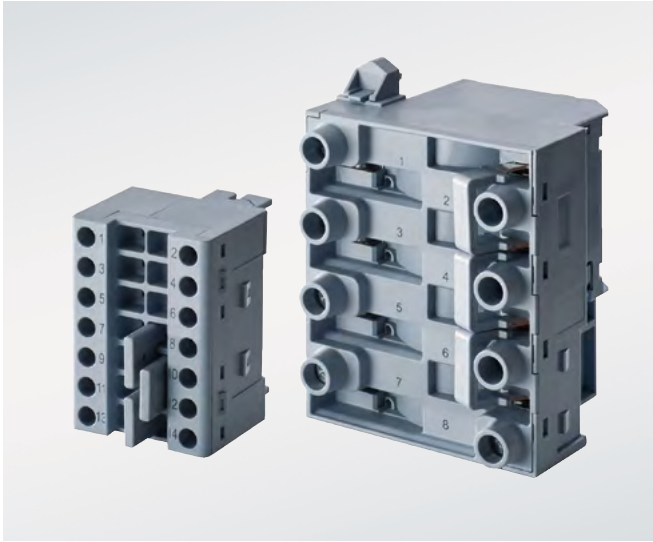

Fig. 6.2-22: Voltage and current terminal block with bridges

Voltage terminals
The voltage transformers and the binary input and output signals are connected via the 14-pole voltage terminal. The cable entry to the terminal enables clear access to the terminal connection. Bridges precisely matching the current and voltage terminals are available for bridging contacts with common potential (Fig. 6.2-22).

Modules

Selection of the input / output boards
Which and how many process connections a base or expansion board has depends on the choice of a particular input/output board. The modular building block concept includes different input/output boards.

The IO202 input/output board is used, e. g., as a base measuring module. By equipping several modules with this module, up to 40 measuring channels can be achieved per SIPROTEC 5 device.

In the module there are connections for:
- 4 voltage transformers
- 4 current transformers, optionally protection-class current transformer, sensitive protection-class current transformer, or instrument transformers
- 8 binary inputs (BI)
- 6 binary outputs (BO), designed as 4 fast speed (type F) make contacts and 2 fast speed changeover contacts.

The connections are distributed on (fig. 6.2-23):
- 1 x 8-pole current terminal block
- 3 x 14-pole voltage terminal blocks.

The modules should be selected based on the intended purpose so as to build up the SIPROTEC 5 device that precisely matches the application. An overview of the modules that are available and their quantity structures is given in table 6.2 - 2 Module quantity structures, see end of chapter.

Second device row
If the number of inputs and outputs of a unit with 4 expansion modules is not enough, a second tier can be added. This requires a PS203 power supply in the second tier on the first mounting position. The remaining 5 positions can be filled with expansion modules from the SIPROTEC 5 module range. Exception: The CB202 must always be in the first tier, and only one can be used with each unit.

Module CB202
Module CB202 (fig. 6.2-24) represents a special case. CB202 (CB = Communication Board) provides 3 positions for plug-in modules. These can be used to plug in up to 2 communication modules or up to 3 measurement transducer modules. Combinations are also possible, e.g., 2 communication modules and one measurement transducer module.

The power supply is integrated so that the CB202 can be powered independently of the main device. Communication with the main device is assured via an RJ45 connector and the bus connection on the front of the module.

Fig. 6.2-23: Rear view of an expansion module IO202

Fig. 6.2-24: Expansion module based on the example of the CB202

Process bus module PB201
The SIPROTEC 5 expansion module PB201 (fig. 6.2-25) makes it easy to extend SIPROTEC 5 devices. The module provides 24 channels for measured values (sampled measured values), for communication according to IEC 61850-9-2 with a merging unit. Integrated resampling makes it possible to connect merging units having different sampling frequencies. To ensure network redundancy, IEC 62439 redundancy protocols PRP and HSR are integrated. Moreover, PB201 has an integrated web server for expanded diagnostic functions. Interfaces:

- A: 2 LC Duplex interfaces channel A
- B: 2 LC Duplex interfaces channel B
- C: 2 LC Duplex interfaces channel C
- Service: 1 LC duplex interface service port.

Measuring ranges of the current-transformer modules
The measuring range (full modulation) of the current transformers can be set to different values electronically depending on the field of application. In all cases, a choice is possile between protection and instrument transformers. Only protection-class current transformers can be used for busbar protection because of the large dynamic range involved. The possible measuring ranges according to rated current are shown in the following table 6.2-1 “Measurement ranges according to rated current”.

A large dynamic range is necessary for network protection applications so that short-circuit currents can be recorded without distortion. A value of 100 × I_{rated} has proven optimal. For 5 A transformer rated current, this corresponds to a setting of 500 A, and consequently of 100 A for 1 A transformers. For applications in generator protection, while it is true that there are very large primary currents, a dynamic range of 20 × I_{rated} is still quite sufficient. Thus a measuring range of 100 A is obtained for a setting I_{rated} = 5 A and a measurement range of 20 A for I_{rated} = 1 A.

A smaller dynamic range means that greater accuracy is achieved in the rated current range. Consequently, the dynamic range for instrument transformers and sensitive protection-class current transformer input for ground fault currents is extremely limited. In this case, limited means that the input current is chopped on the analog side. Of course, the inputs in this case are protected against overdriving.

Plug-in modules
Plug-in modules are available for communication or analog inputs.

Fig. 6.2-25: Process module PB201

	Rated current I_{rated}	Measuring range	Measuring range 7xx82 devices
Protection-class current transformers	5 A	500 A	250 A
	1 A	100 A	50 A
Instrument transformers	5 A	8 A	8 A
	1 A	1.6 A	1,6 A
Sensitive ground-current input	5 A	8 A	8 A
	1 A	1.6 A	1 A

Table 6.2-1: Measuring ranges according to rated current

Measuring transducer module ANAI-CA-4EL
The module has four 20 mA inputs. It can be plugged into one of the slots in the PS201 or CB202. Multiple measured value modules can be used with each device (one in each available slot), but – as a rule – one slot is needed for a communication module. The connections are created via an 8-pole screwed terminal block (fig. 6.2-26).

Arc protection module ARC-CD-3FO
Up to 3 optical point sensors per arc protection plug-in module (fig. 6.2-27) can be connected. This yields a maximum number of up to 15 sensors for modular SIPROTEC 5 devices.

The point sensors can be ordered with connection cable lengths from 3 m to 35 m.

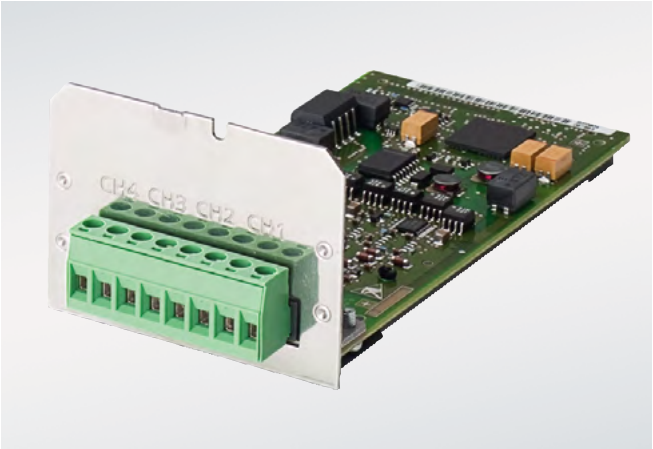

Fig. 6.2-26: Measuring transducer input module ANAI-CA-4EL

Fig. 6.2-27: Arc protection module ARC-CD-3FO

Designation	Description	*V*-input	*I*-input	BI (isolated)	BI (connected to common potential)	BO make contact	BO make contact type F*	BO make contact type HS**	BO changeover contacts	BO change-over contact type F*	Fast measuring transducer 20 mA/10 V	BO power relay	Number of slots for plug-in modules	Available in the base module	Availabe as expansion module	Power supply	Usable in module row
PS101	Power supply module for all 7xx82 devices				3	1			2 [1]				2	X		X	1
PS201	Power supply module for the first module row				3	1			2 [1]				2	X		X	1
PS203	Power supply module for the second module row														X	X	2
CB202	Module with 3 additional slots for modules and an independent power supply												3	–	X	X	1
IO101	Base module for all 7xx82 devices that require current measurement		4	1	7	4			2					X	–		1
IO102	Base module for all 7xx82 devices that require current and voltage measurement	4	4	1	7	4			2					X	–		1
IO110	Module for additional binary inputs and outputs for all 7xx82 devices				12	7								X	–		1
IO201	Base module for protection applications that do not require voltage measurement		4	8			4			2				X	X		1, 2
IO202	Base module for all devices that require current and voltage measurement	4	4	8			4			2				X	X		1, 2
IO203	Module for device numerous current inputs		8	4			4							X	X		1, 2
IO204	This module contains 4 power relays for direct control of the operating mechanism motors of grounding switches and disconnectors			10		4						4			X		1, 2
IO205	For applications with binary inputs and binary outputs			12		16									X		1, 2
IO206	For applications with binary inputs and binary outputs			6		7									X		1, 2
IO207	Geared toward bay controllers due to the predominant number of binary inputs			16		8									X		1, 2
IO208	Typical module for protective applications. In contrast to the IO202, it is equipped with more relay outputs	4	4	4		3	6			2				X	X		1, 2
IO209	This module is used when extremely fast tripping times (4 make contacts, 0.2 ms pickup time) are required, such as in extra-high-voltage protection			8				4							X		1, 2
IO210	Module for all devices that require current and voltage measurement and fast detection of measuring transducer signals	3	4				5			2	4			X	X		1, 2
IO211	Module for devices that require a numerous voltage inputs	8		8		8									X		1, 2
IO212	Module for very fast detection of measuring transducer signals (20 mA or 10 V) with a main field of application for the recording of interference signals and monitoring			8							8				X		1, 2
IO214	Typical module for protective applications. In contrast to the IO202, it has a reduced quantity structure	4	4	2			4			4				X	X		1, 2
IO215	Special module for connecting special high-impedance voltage dividers via 10-V voltage inputs	4 [2]	4	8			4			2					X		1, 2
IO230	Module receiving large volumes of information, such as in the bay controllers or busbar protection. The process connection is made via special terminals				48										X		1, 2
IO231	Module for receiving and output of large volumes of information, such as in the bay controllers or busbar protection. The process connection is made via special terminals				24	24									X		1, 2

*Type F – fast relay with monitoring (response time < 5 ms)
**Type HS – high-speed relay (contact with solid-state bypass) with monitoring (response time < 0.2 ms)

[1] Of these, 1 life contact
[2] 10 V voltage inputs for RC dividers with high impedance
The connection diagrams of the individual modules are included in the attachment

Table 6.2-2: Module overview

6.2.2 Applications

Fig. 6.2-28 provides an overview of the application of SIPROTEC 5 devices in the grid. This is a simplified illustration. Particularly with the advent of regenerative suppliers, energy is being injected into the grid at all voltage levels.

The protection objects are the busbars, the overhead lines or cables, and the transformers. The corresponding protection devices have been assigned to these objects.

Table 6.2-3 gives an overview of SIPROTEC 5 device types. Beside an extract of protection funtions (table 6.2-4), the application examples for SIPROTEC 5 devices are given on the next pages.

Device types

After introduction to the innovation highlights of the SIPROTEC 5 devices, the following text will describe the devices. They are easily identified with the aid of a five-digit abbreviation code.

The first digit (6 or 7) stands for the digital equipment. The two letters describe the functionality, and the last two digits identify typical properties. Fig. 6.2-29 shows the definition of device types based on designation.

Application templates

Application templates allow to fast track the best solution. A library of application templates is available that can be tailored to the specific functional scope for typical applications.

Fig. 6.2-30 (next page) shows an example of a system configuration. The functions in the application template are combined in functional groups (FG). The functional groups (FG) correspond to the primary components (protection object: line; switching device: circuit-breaker), thereby simplifying the direct reference to the actual system.

For example, if the switchgear includes 2 circuit-breakers, this is also represented by 2 “circuit breaker” functional groups – a schematic map of the actual system.

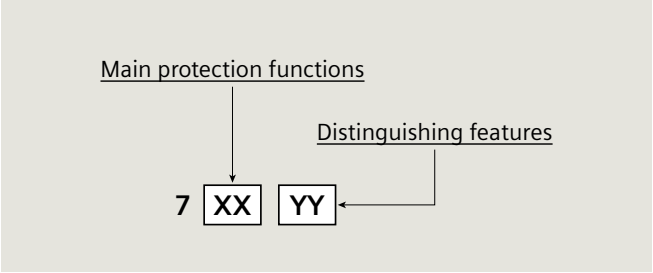

Fig. 6.2-29: Definition of device types

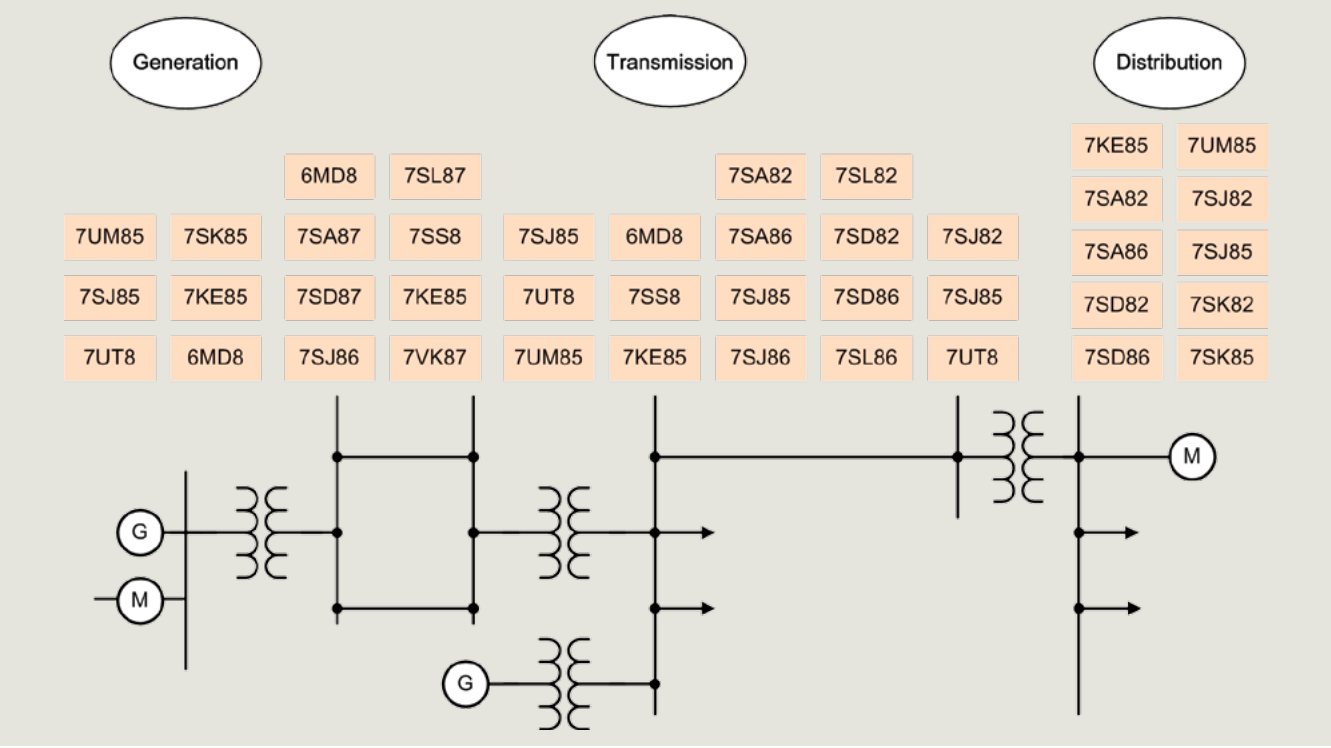

Fig. 6.2-28: Available device types of the SIPROTEC 5 system

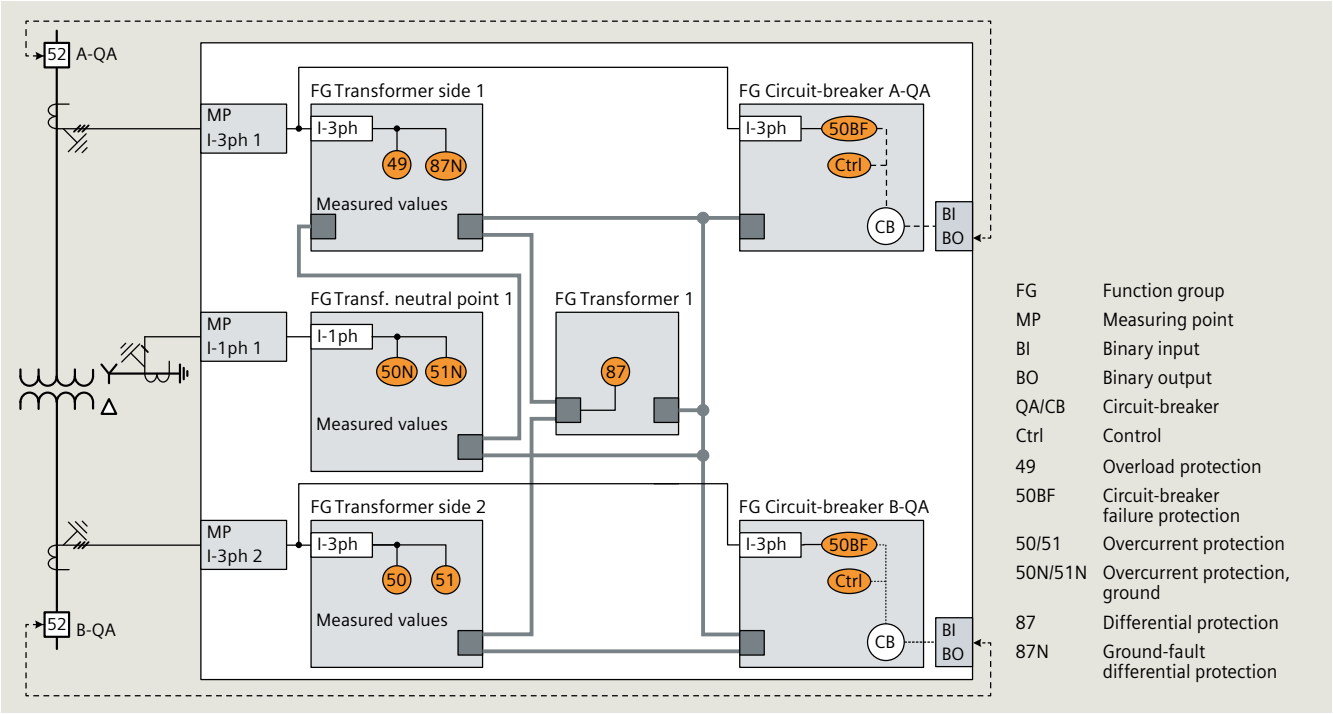

Fig. 6.2-30: Protection of a transformer

Protection functions	Device types
Overcurrent protection	
Overcurrent protection with PMU* and control	7SJ82, 7SJ85
Line protection	
Distance protection with PMU* and control	7SA82, 7SA86, 7SA87
Line differential protection with PMU* and control	7SD82, 7SD86, 7SD87
Combined line differential and distance protection with PMU* and control	7SL82, 7SL86, 7SL87
Circuit-breaker management device with PMU* and control	7VK87
Overcurrent protection for lines with PMU*	7SJ86
Transformer protection	
Transformer protection with PMU*, control and monitoring	7UT82, 7UT85, 7UT86, 7UT87
Motor protection	
Motor protection with PMU* and control	7SK82, 7SK85
Generator protection	
Generator protection	7UM85
Busbar protection	
Central busbar protection	7SS85
Bay controllers	
Bay controllers for control/interlocking tasks with PMU* monitoring, and protection functions*	6MD85, 6MD86
Fault recorders	
Fault recorders, fault recorders with power quality recordings, and fault recorders with PMU*	7KE85
*) optional	

Table 6.2-3: Available device types of the SIPROTEC 5 system

Protection functions legend		
ANSI	**Function**	**Abbr.**
	Protection functions for 3-pole tripping	3-pole
	Protection functions for 1-pole tripping	1-pole
21	Distance protection	$Z<$
FL	Fault locator	FL
25	Synchrocheck, synchronizing function	Sync
27	Undervoltage protection	$V<$
32	Directional power supervision	$P>$, $P<$
37	Undercurrent, underpower	$I<$, $P<$
46	Unbalanced-load protection	$I2>$
49	Thermal overload protection	θ, I^2t
50/50N	Definite time-overcurrent protection	$I>$
50Ns	Sensitive ground-current protection	$I_{Ns}>$
50L	Load-jam protection	$I>_L$
50BF	Circuit-breaker failure protection	CBFP
51/51N	Inverse time-overcurrent protection	I_P, I_{Np}
51V	Overcurrent protection, voltage controlled	$t=f(I)+V<$
67	Directional time-overcurrent protection, phase	$I>$, $I_P \angle (V, I)$
67N	Directional time-overcurrent protection for ground-faults	$I_N>$, $I_{NP} \angle (V, I)$
67Ns	Sensitive ground-fault detection for systems with resonant or isolated neutral	$I_N>$, $\angle (V, I)$
79	Automatic reclosing	AR
87	Differential protection	ΔI
PMU	Synchrophasor measurement	PMU

Table 6.2-4: Extract of protection functions

Application examples – medium voltage

Medium-voltage applications for all system grounding types

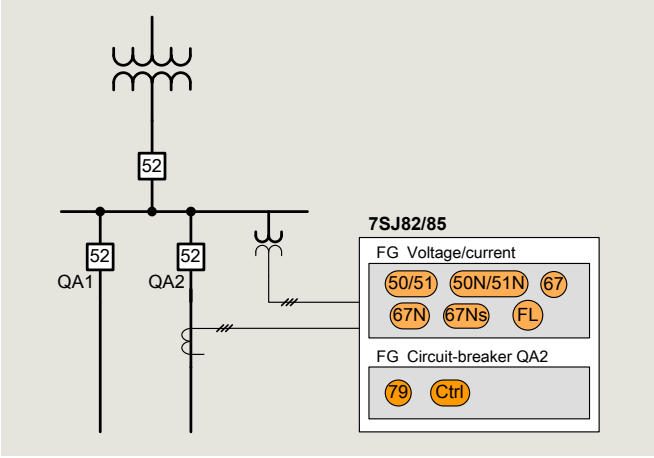

Fig. 6.2-31: Medium-voltage application for all system grounding types

Properties
- Reliable detection of transients and static ground faults
- Cost saving due to integrated transient function
- Directional and non-directional protection and control functions
- Acquisition and transmission of PMU variables possible.

Fast fault clearance in double-feed lines (closed) rings

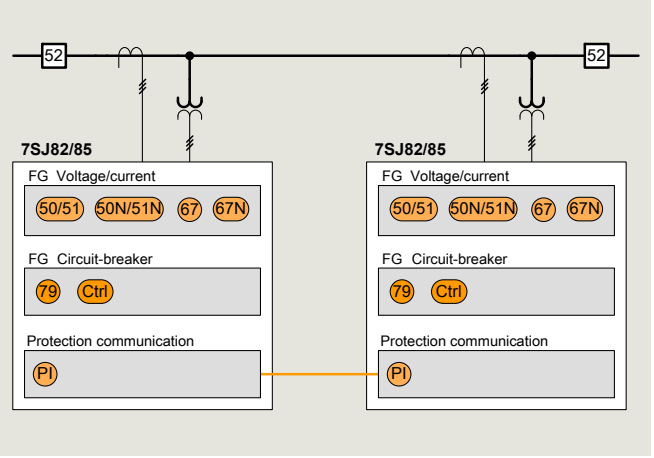

Fig. 6.2-33: Fast fault clearance in double-feed lines (closed) rings

Properties
- Directional DMT/IDMTL protection without grading times
- Fast fault clearance
- Low-cost due to integrated protection interface
- Monitored data exchange
- Adaptable to different communication infrastructures.

Protection and control of several feeders with one device

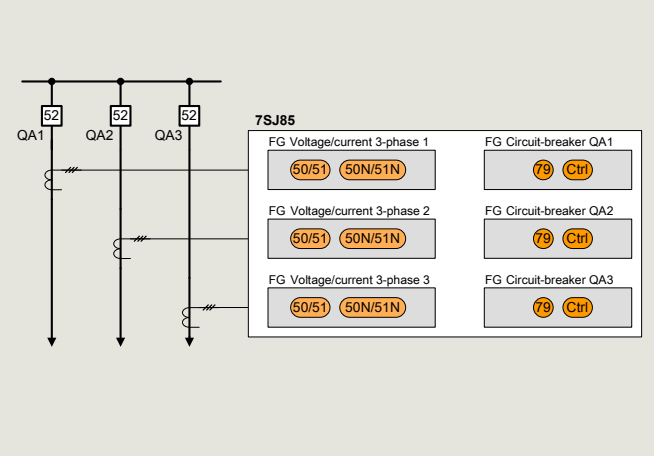

Fig. 6.2-32: Protection and control of several feeders with one device

Properties
- Reduced investment because 1 device for multiple feeders
- Simple parameterization
- Shorter commissioning times
- Protection for up to 7 feeders with a single device reduces costs.

Central control of multiple feeders and dedicated protection

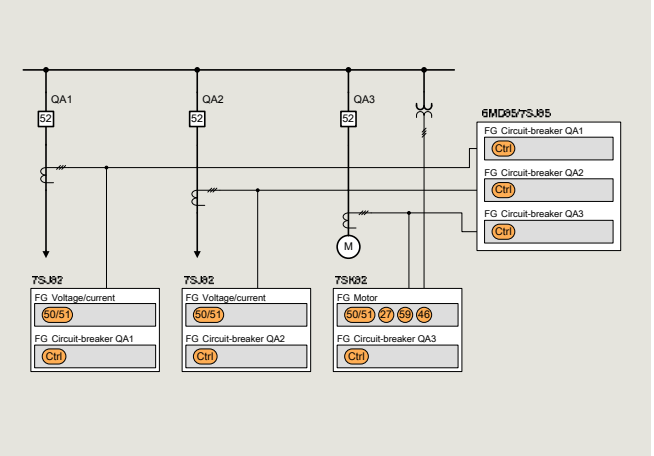

Fig. 6.2-34: Central control of multiple feeders and dedicated protection

Properties
- Protection for each bay
- Central control for multiple feeders
- High availability because backup protection functions can be activated in the controllers.

Application examples – transformer protection

Two-winding transformer

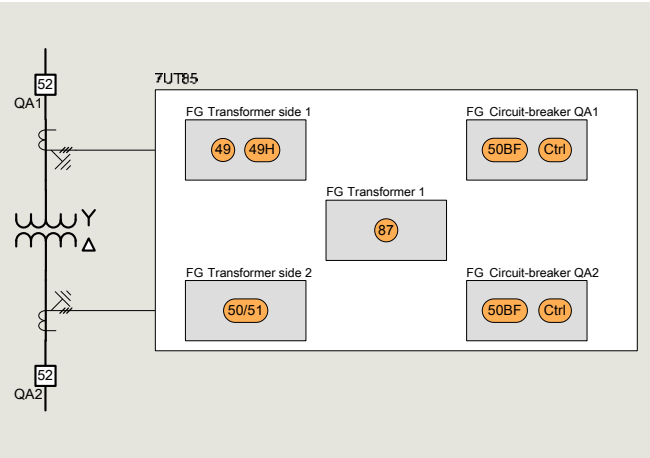

Fig. 6.2-35: Two-winding transformer

Properties

- Clear assignment of the functions to the primary element
- Reduced investment
- Simple parameterization
- Reduced wiring and faster commissioning.

Autotransformer bank

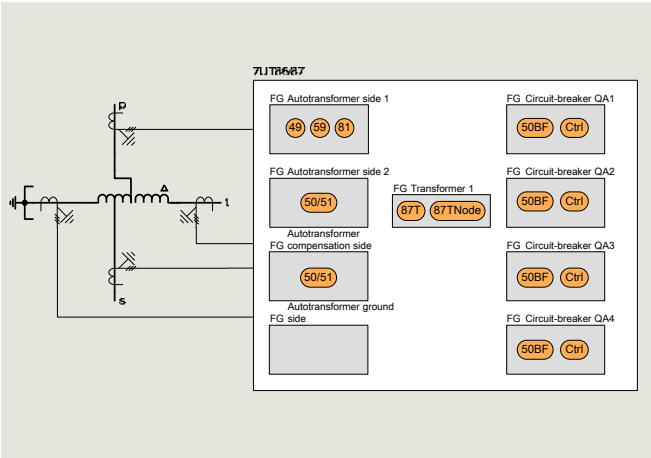

Fig. 6.2-37: Autotransformer bank

Properties

- Reduced investment due to integration of the differential and node protection function in one unit (87 and 87 Node)
- High sensitivity with single line to ground faults

Two-winding transformer with 2 incoming feeders (e.g., double circuit-breaker switchgear) protection

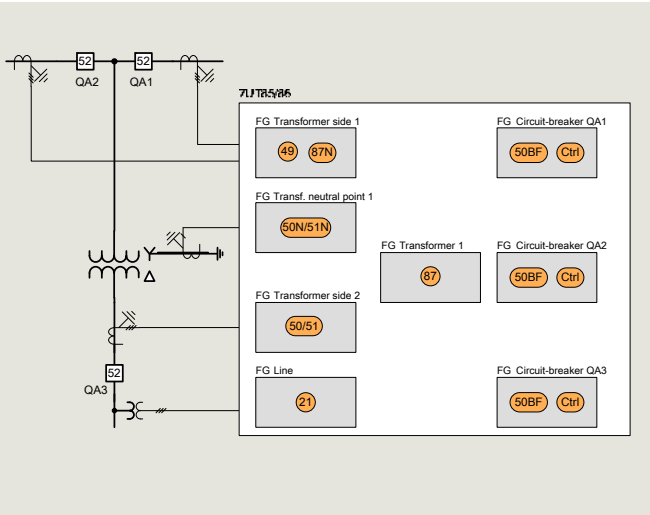

Fig. 6.2-36: Two-winding transformer with 2 incoming feeders (e.g., double circuit-breaker switchgear)

Properties

- Separate acquisition, monitoring and control of all circuit-breakers
- High sensitivity with single line to ground-fault differential protection
- Cost savings due to 87T and 87T N in one unit.

Protection and backup protection solution for three-winding transformers

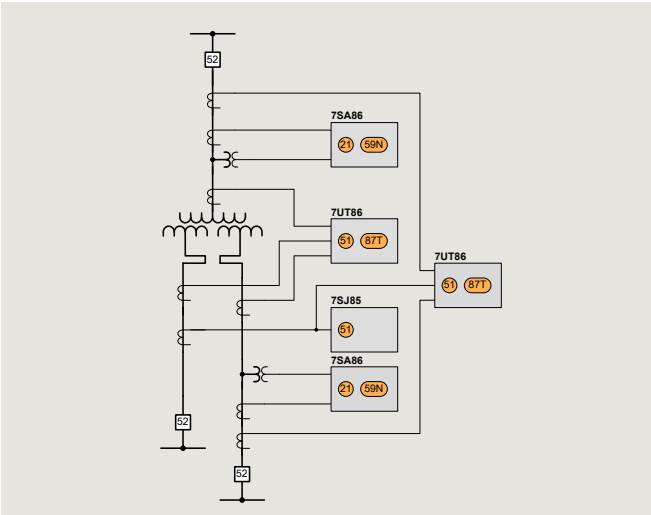

Fig. 6.2-38: Protection and backup protection solution for three-winding transformers

Properties

- Free design of the protection and backup protection concept
- Inclusion of line protection devices
- Increased availability.

Application examples – motor protection

Asynchronous motor: protection and control

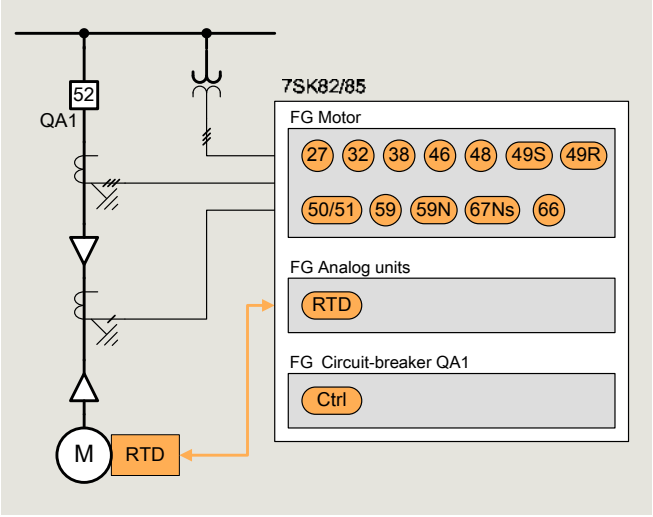

Fig. 6.2-39: Protection and control for induction motor

Properties

- Reduced investment because protection and control in one device
- Thermal motor protection functions for reliable motor monitoring
- Thermal motor protection functions with direct connection of temperature sensors.

Motor protection and simplified differential protection

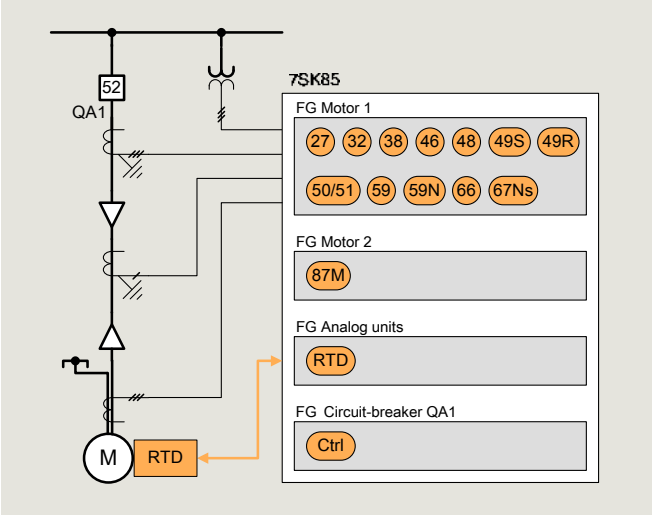

Fig. 6.2-41: Protection and control of multiple feeders with one device

Properties

- Differential protection function provides high responsivity and short tripping time
- Integration of the differential protection function in a separate function group reduces costs.

Motor protection with differential protection

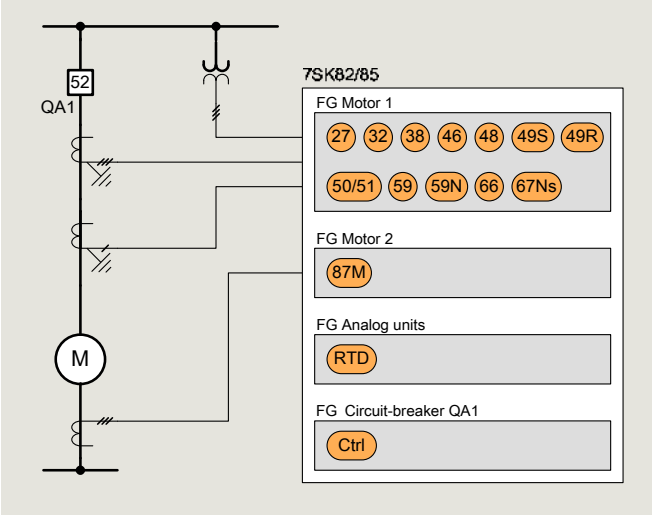

Fig. 6.2-40: Motor protection with differential protection

Properties

- Autonomous differential protection functions
- High sensitivity and short tripping times due to differential protection function
- Separate acquisition and monitoring of the current transformers.

Motor differential protection with Korndorfer starter

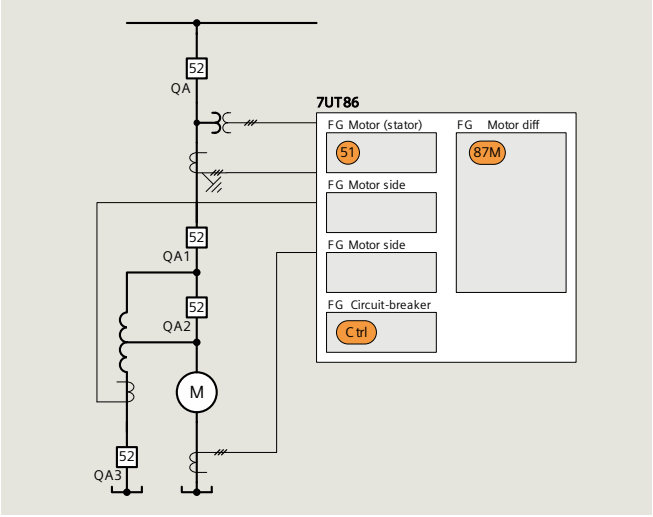

Fig. 6.2-42: Motor differential protection with Korndorfer starter

Properties

- Capturing, monitoring and control of all circuitbreakers
- Differential protection function also available during starting.

Application examples – generator protection

Unit connection of a small-power generator

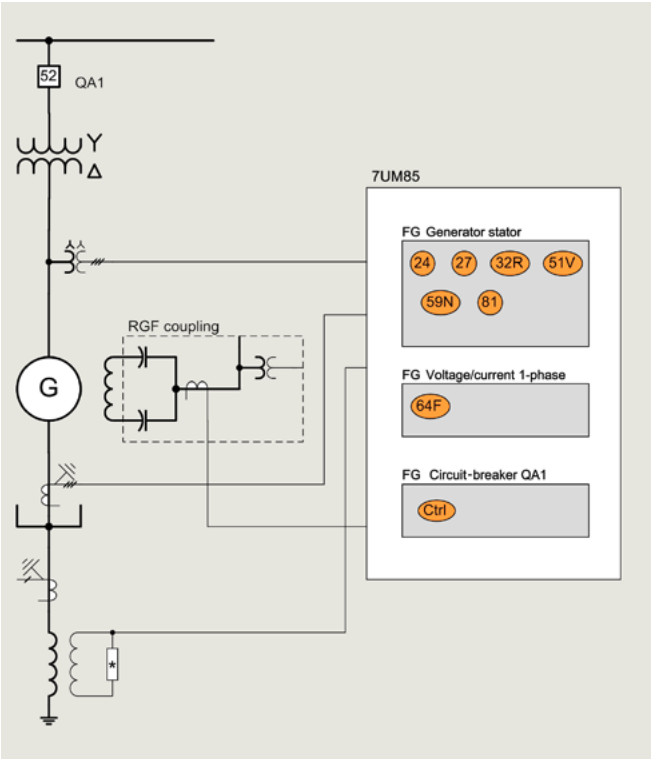

Fig. 6.2-43: Unit connection of a small-power generator

Properties

- All functions in one device keep investments low
- Basic hardware (1/3 x 19")
- Preconfigured with the "Generator basis" application template.

Unit connection of a medium-power generator

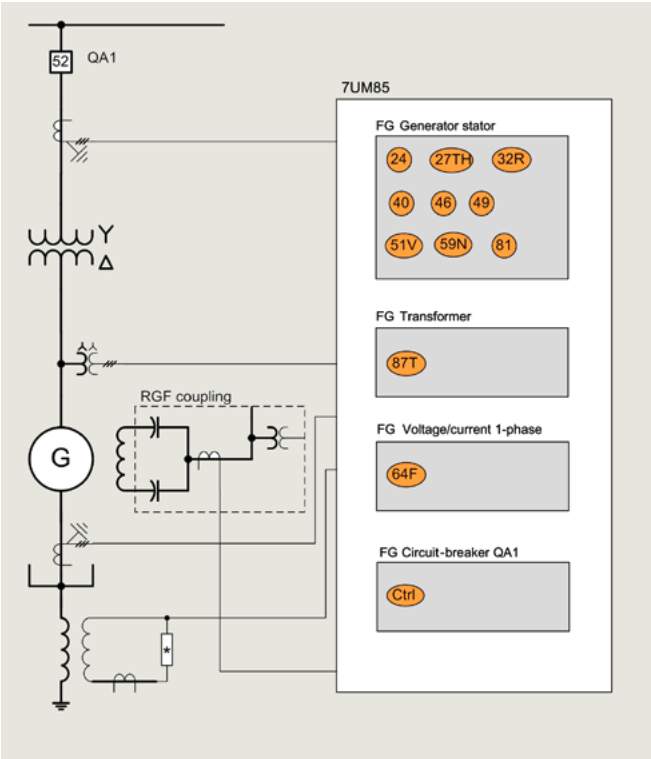

Fig. 6.2-44: Unit connection of a medium-power generator

Properties

- All functions in one device keep investments low
- Basic hardware (1/2 x 19")
- Preconfigured with the "Generator unit connection basis" application template
- Stator ground-fault protection protects 100 % of the stator winding by evaluating the residual voltage via the fundamental component and the 3rd harmonic (59N, 27TH)
- Differential protection via generator transformer with function 87T.

Application examples – generator protection

Unit connection of a generator with auxiliary transformer

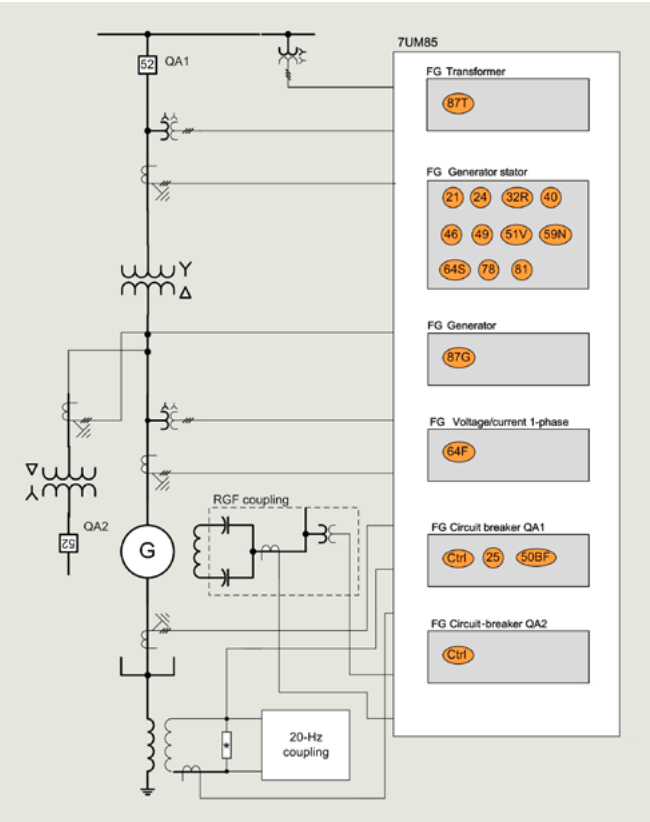

Fig. 6.2-45: Unit connection of a generator with auxiliary transformer

Properties

- All functions in one device keep investments low
- Minimum hardware (2/3 x 19")
- Modification of the "Generator unit connection enhanced" application template
- Stand-alone differential protection via generator (87G) and generator transformer (87T)
- Implementation of the transformer differential protection as teed feeder differential protection
- Real 100 % stator ground-fault protection for coupling a 20-Hz voltage
- Stator ground-fault protection possible at standstill
- Synchrocheck release by the device during manual synchronization
- Redundancy by device doubling.

High-power generator with protection as sub-packet

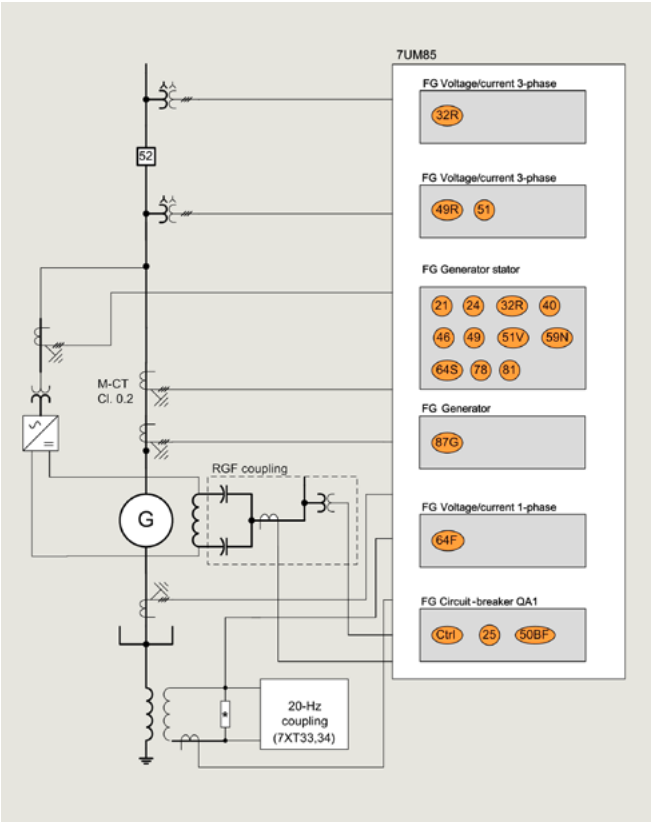

Fig. 6.2-46: High-power generator with protection as sub-packet

Properties

- The delivery includes the generator, the excitation, and the generator protection of a plant in unit connection for a steam turbine
- All functions in one device keep investments low
- Minimum hardware (2/3 x 19")
- Modification of the "Generator unit connection enhanced" application template
- Sensitive reverse-power protection by connection to a separate instrument transformer
- Separate protection for the excitation transformer
- Synchrocheck release by the device during manual synchronization
- Redundancy by device doubling.

Application examples – line protection

Protection and control separately

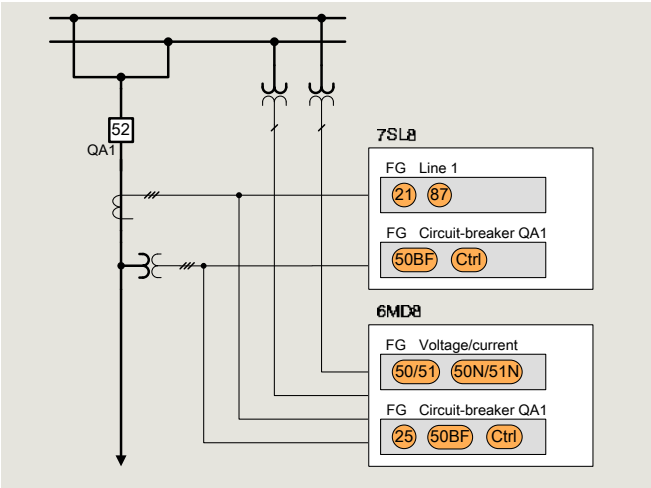

Fig. 6.2-47: Protection and control separately

Properties

- Clear assignment of protection and control in separate devices
- Less external components by detection and selection of busbar voltage in the device
- High reliability due to backup protection functions in the 6MD8 bay controller
- High availability due to emergency control in the 7SL8 protection device.

Low-cost protection and device redundancy

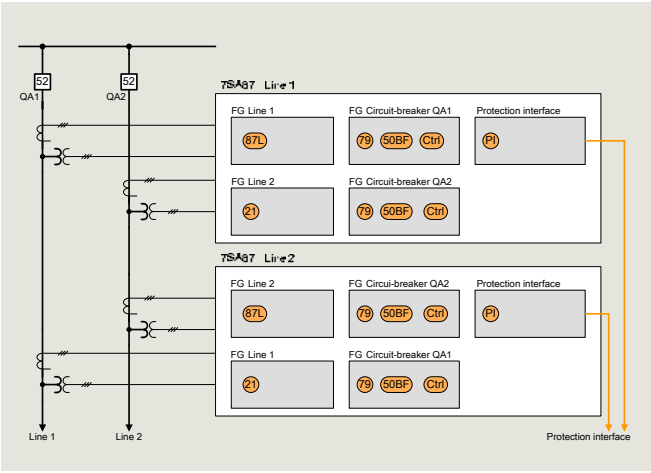

Fig. 6.2-48: Low-cost protection and device redundancy

Properties

- High availability due to protection and device redundancy
- Low-cost because only 2 devices required for 2 lines
- Reliable because of parallel processing of the protection functions in the devices.

Distance protection of two parallel lines with one device

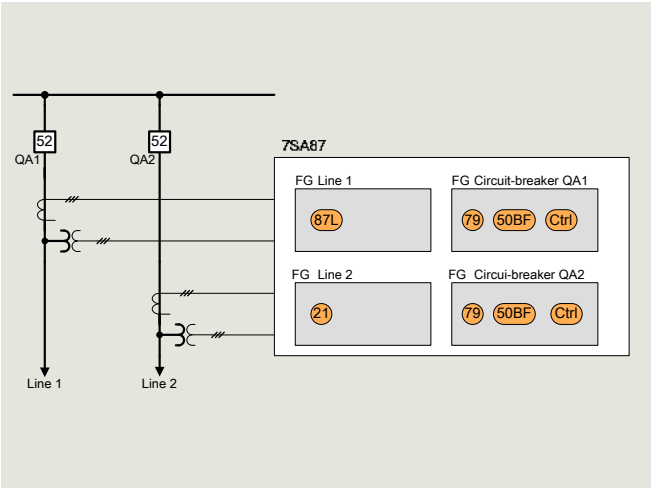

Fig. 6.2-49: Distance protection of two parallel lines with one device

Properties

- Low-cost due to protection of both lines in one device
- Stable due to consideration of the influences of the parallel line for the distance protection function.

Self-restoring multi-end configurations

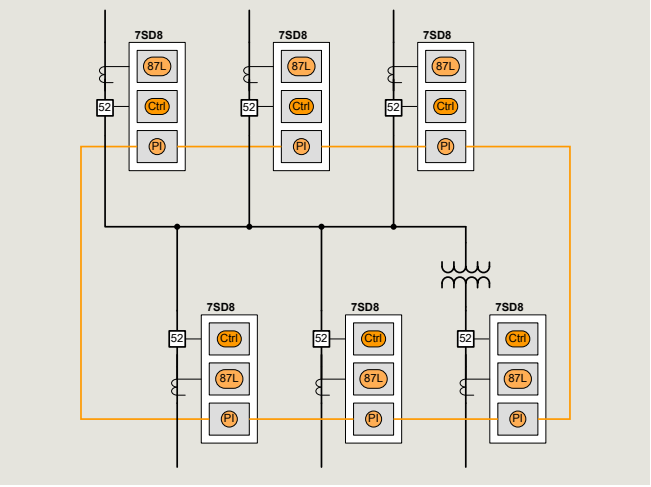

Fig. 6.2-50: Self-restoring multi-leg configurations

Properties

- High availability because differential protection is also active when a communication link fails
- Self-restoring due to automatic switchover from ring to chain topology
- High ease of maintenance because single line ends can be taken out of the differential protection configuration for commissioning and servicing.

Application examples – breaker-and-a-half layout

Modular and distributed protection and control solution

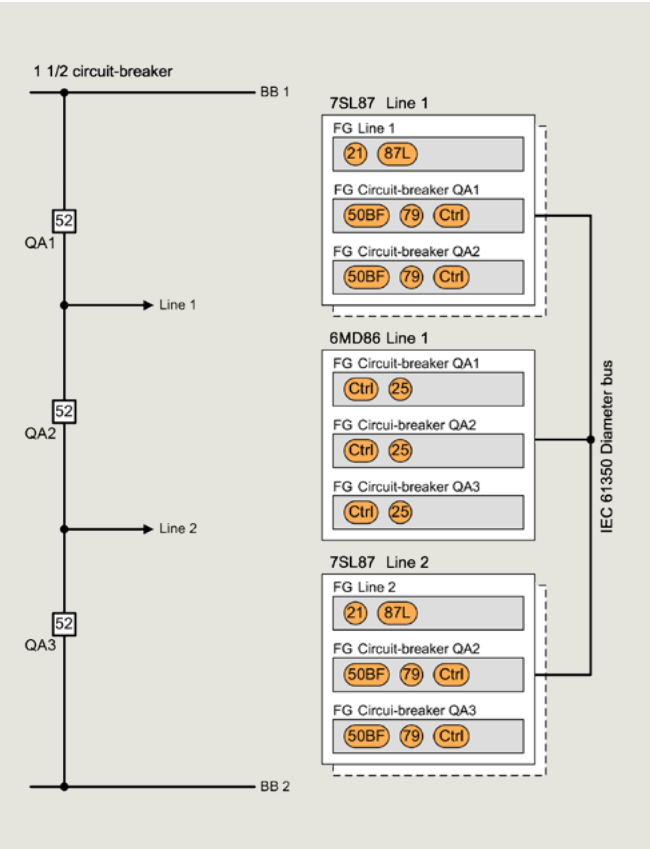

Fig. 6.2-51: Modular and distributed protection and control solution

Low-cost device and protective redundancy in breaker-and-a-half arrangements

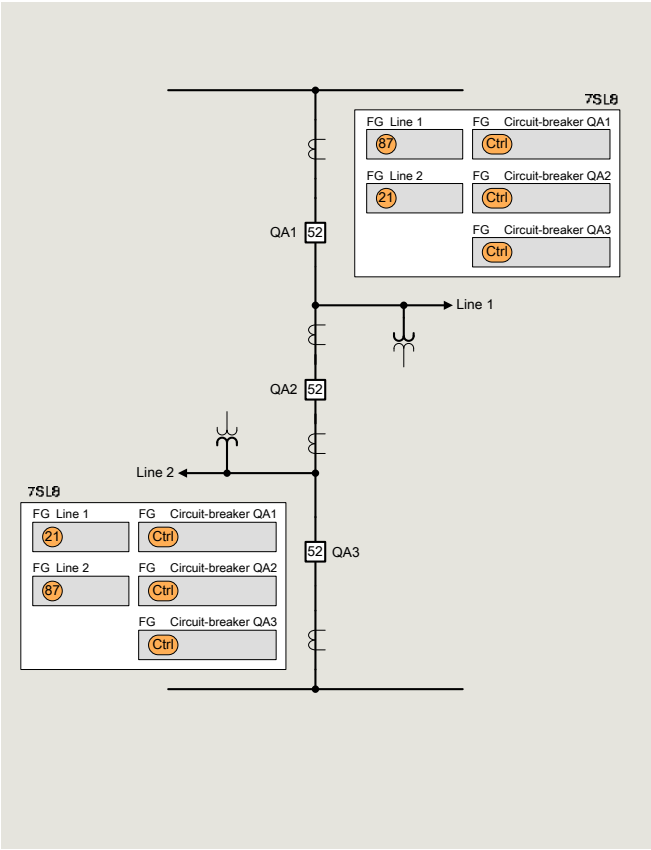

Fig. 6.2-52: Low-cost device and protection redundancy in breaker-and-a-half switchgear

Properties

- Clarity due to clear assignment of protection and control
- High availability due to protection redundancy (Main 1 and Main 2)
- Simple reliable central control of the entire diameter
- Reliable due to emergency control in every line in the protection device
- Reduced wiring due to integrated voltage selection:
  - System-wide diameter bus based on IEC 61850
  - Electrically isolated data exchange
  - Reduced wiring
  - Easy expansion.

Properties

- Unambiguous allocation of the main protection function (line differential protection 87) to one line in one device (Main 1)
- The distance protection function (21) is implemented in the protection device of the other line by a second "Line" function group
- High availability and safety by device and protection redundancy
- Low costs due to protecting and controlling a complete diameter with only two devices.

Application examples – capacitor banks

Protection of a capacitor bank in an H-connection

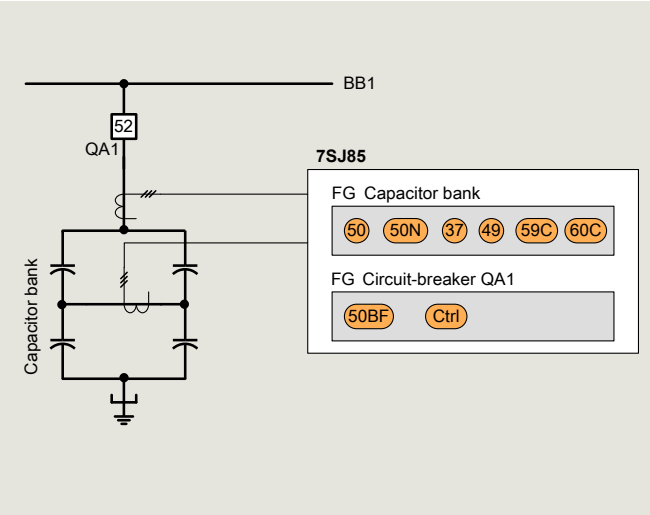

Fig. 6.2-53: Protection of a capacitor bank in an H-connection

Properties

- Precisely adapted due to dedicated function group and application-specific protection function, such as peak overvoltage protection (ANSI 59C) and sensitive current-unbalance protection (ANSI 60C)
- Low cost due to integration of all required functions into one device.

Protection of an MSCDN capacitor bank (MSCDN = Mechanically Switched Circuit-Breaker with Damping Network)

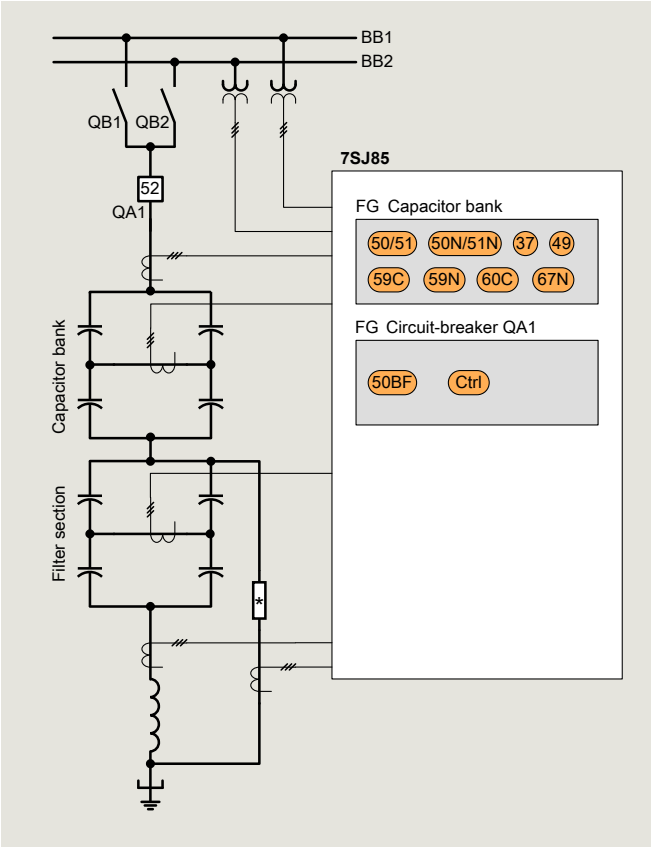

Fig. 6.2-54: Protection of an MSCDN capacitor bank

Properties

- Optimum protection of complex banks and filter circuits with flexible hardware and a flexible function design
- Low costs due to the integration of all necessary functions in one device for up to seven 3-phase measuring points
- Generation of current sum and current difference at the current interface of the protection function group "3-phase V/I"
- Detection of current and voltage signals up to the 50th harmonic with a high accuracy for protection and operational measured values.

Application examples – busbar protection

Double busbar feeder with busbar coupler

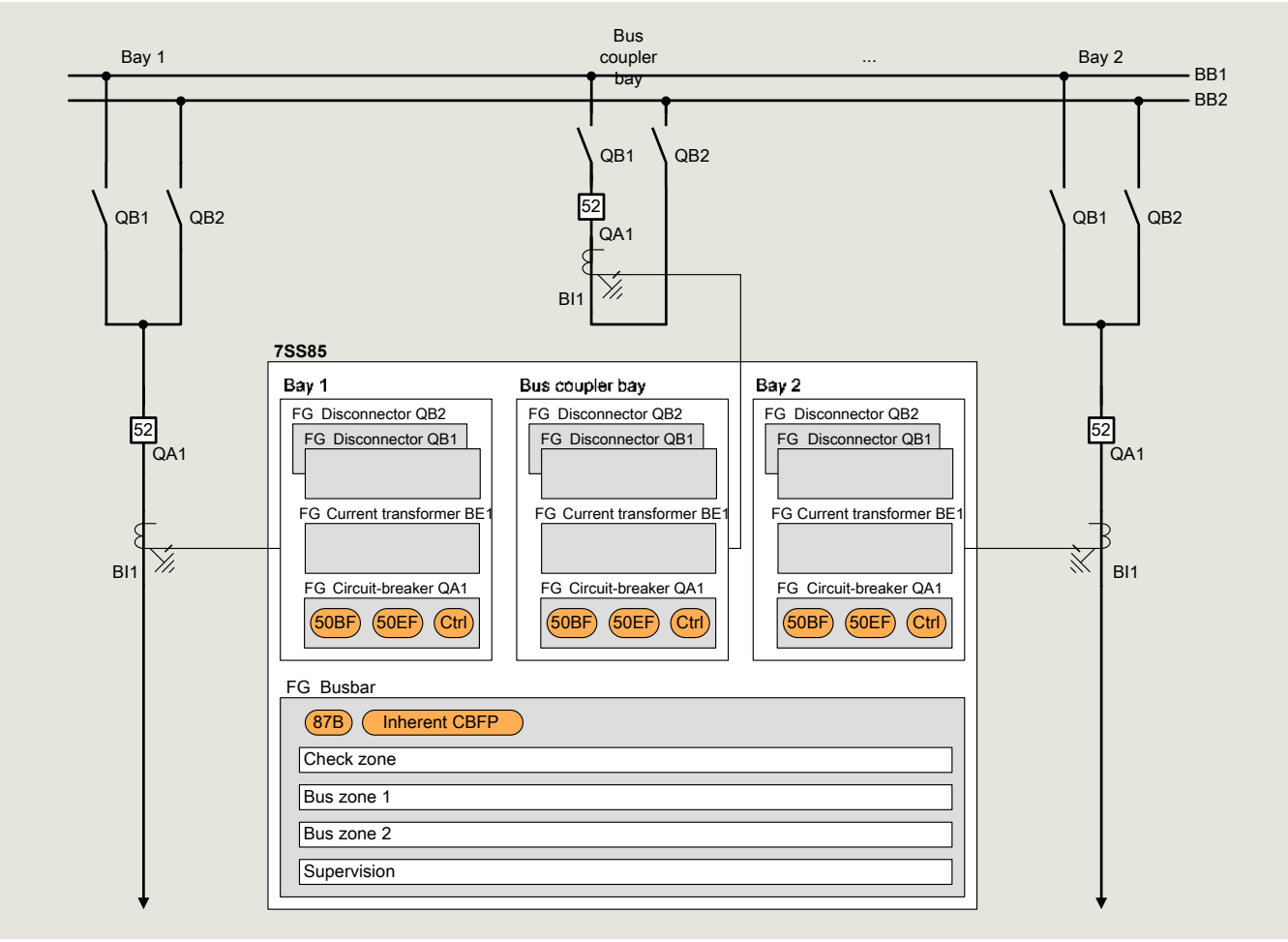

Fig. 6.2-55: Double busbar feeder with busbar coupler

Properties

- Central busbar protection
- Summary of all primary components of a bay in the "Bay Proxy"
- One device for up to 20 measuring points
- Flexible adaptation to the topology (up to 4 busbar sections and 4 busbar couplers configurable)
- Integrated disconnector image
- Comfortable graphical project engineering with DIGSI 5.

Application example – Power sytem monitoring and PMU

Grid monitoring and PMU

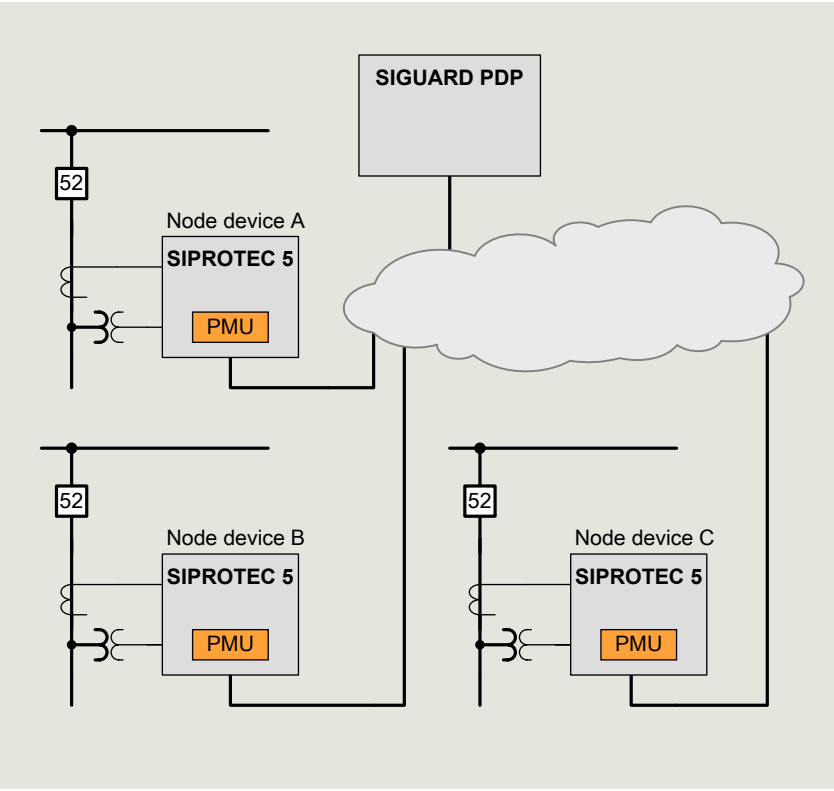

Fig. 6.2-56: Principle of distributed phasor measurement

Properties

- Each SIPROTEC 5 device can be equipped or retrofitted with the PMU function
- Online and offline evaluation of the PMU data in the monitoring system, SIGUARD PDP.

6.2.3 Protection coordination

Typical applications and functions

Relay operating characteristics and their settings must be carefully coordinated in order to achieve selectivity. The aim is basically to switch off only the faulty component and to leave the rest of the power system in service in order to minimize supply interruptions and to ensure stability (fig. 6.2-57).

Sensitivity

Protection should be as sensitive as possible in order to detect faults at the lowest possible current level. At the same time, however, it should remain stable under all permissible load, overload and through-fault conditions. For more information: www.siemens.com/systemplanning. The Siemens engineering programs SINCAL and SIGRADE are especially designed for selective protection grading of protection relay systems. They provide short-circuit calculations as well as international standard characteristics of relays, fuses and circuit-breakers for easy protection grading with respect to motor starting, inrush phenomena, and equipment damage curves.

Phase-fault overcurrent relays

The pickup values of phase overcurrent relays are normally set 30 % above the maximum load current, provided that sufficient short-circuit current is available. This practice is recommended particularly for mechanical relays with reset ratios of 0.8 to 0.85. Numerical relays have high reset ratios near 0.95 and allow, therefore, about a10 % lower setting. Feeders with high transformer and/or motor load require special consideration.

Transformer feeders

The energizing of transformers causes inrush currents that may last for seconds, depending on their size (fig. 6.2-58). Selection of the pickup current and assigned time delay have to be coordinated so that the inrush current decreases below the relay overcurrent reset value before the set operating time has elapsed. The inrush current typically contains only about a 50 % fundamental frequency component. Numerical relays that filter out harmonics and the DC component of the inrush current can therefore be set to be more sensitive. The inrush current peak values of fig. 6.2-58 will be reduced to more than one half in this case. Some digital relay types have an inrush detection function that may block the trip of the overcurrent protection resulting from inrush currents.

Ground-fault protection relays

Earth-current relays enable a much more sensitive setting, because load currents do not have to be considered (except 4-wire circuits with 1-phase load). In solidly and low-resistance earthed systems, a setting of 10 to 20 % rated load current can generally be applied. High-resistance earthing requires a much more sensitive setting, on the order of some amperes primary. The earth-fault current of motors and generators, for example, should be limited to values below 10 A in order to avoid iron burning. In this case,

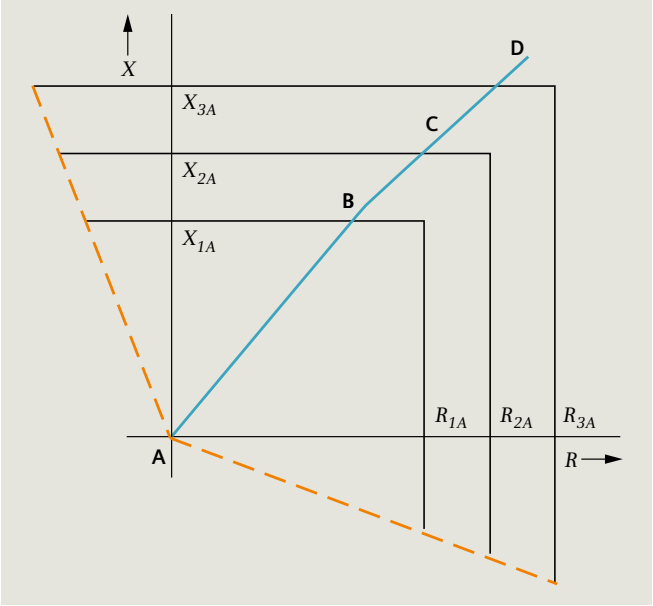

Fig. 6.2-57: Operating characteristics of Siemens distance relays

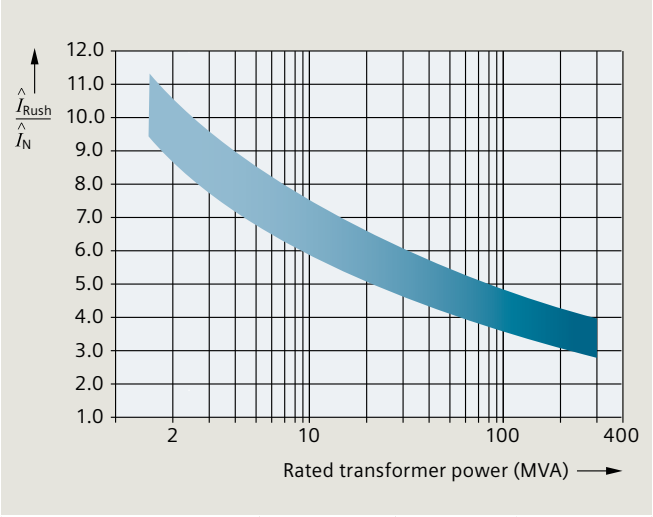

Time constant of inrush current			
Nominal power (MVA)	0.5 ... 1.0	1.0 ... 10	> 10
Time constant (s)	0.16 ... 0.2	0.2 ... 1.2	1.2 ... 720

Fig. 6.2-58: Peak value of inrush current

residual-current relays in the start point connection of CTs cannot be used; in particular, with rated CT primary currents higher than 200 A. The pickup value of the zero-sequence relay would be on the order of the error currents of the CTs. A special core-balance CT is therefore used as the earth-current sensor. Core-balance CTs are designed for a ratio of 60/1 A. The detection of 6 A primary would then require a relay pickup setting of 0.1 A secondary. An even more sensitive setting is applied in isolated or Petersen coil earthed systems where very low earth currents occur with 1-phase-to-earth faults. Settings of 20 mA and lower may then be required depending on the minimum earth-fault current. The integrated sensitive directional earth-fault function allows settings as low as 1 mA.

Remark to ground-fault protection with cable-type current transformers: The properties of a given cable-type current transformer have to be observed.

The setting of IE> must have sufficient margin against the maximum error current of the cable type CT.

Background:
Even in the case where the 3 conductors are centrally bundled, when passing through the cable type CT, an error current "I error" will arise in the secondary circuit. This error current is generally proportional to load current flowing through the CT.

In the case of non-bundled conductors or when the conductors are not in the center of the cable type CT, the error current "I error" may be substantially larger.

Motor feeders
The energization of motors causes a starting current of initially 5 to 6 times the rated current (locked rotor current).

A typical time-current curve for an induction motor is shown in fig. 6.2-59.

In the first 100 ms, a fast-decaying asymmetrical inrush current also appears. With conventional relays, it was common practice to set the instantaneous overcurrent stage of the short-circuit protection 20 to 30 % above the locked rotor current with a short-time delay of 50 to 100 ms to override the asymmetrical inrush period.

Numerical relays are able to filter out the asymmetrical current component very rapidly so that the setting of an additional time delay is no longer applicable.

The overload protection characteristic should follow the thermal motor characteristic as closely as possible. The adaptation is made by setting the pickup value and the thermal time constant, using the data supplied by the motor manufacturer. Furthermore, the locked-rotor protection timer has to be set according to the characteristic motor value.

Time grading of overcurrent relays (51)
The selectivity of overcurrent protection is based on time grading of the relay operating characteristics. The relay closer to the infeed (upstream relay) is time-delayed against the relay further away from the infeed (downstream relay). The calculation of necessary grading times is shown in fig. 6.2-59 by an example for definite-time overcurrent relays.

Inverse-time relays
For the time grading of inverse-time relays, in principle the same rules apply as for the definite-time relays. The time grading is first calculated for the maximum fault level and then checked for lower current levels (fig. 6.2-60).

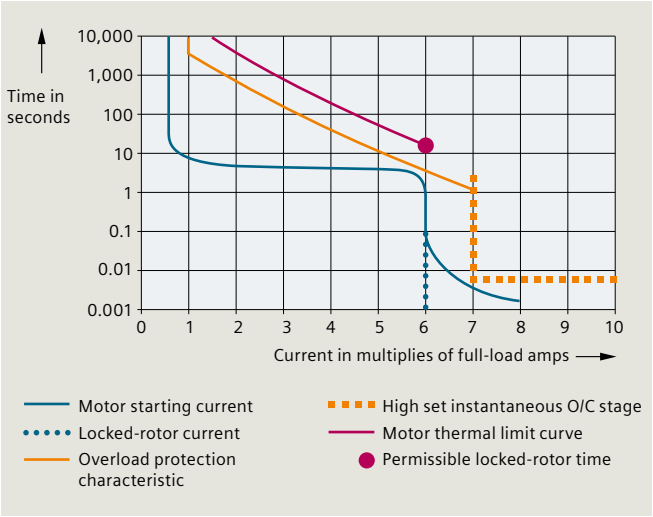

Fig. 6.2-59: Typical motor current-time characteristics

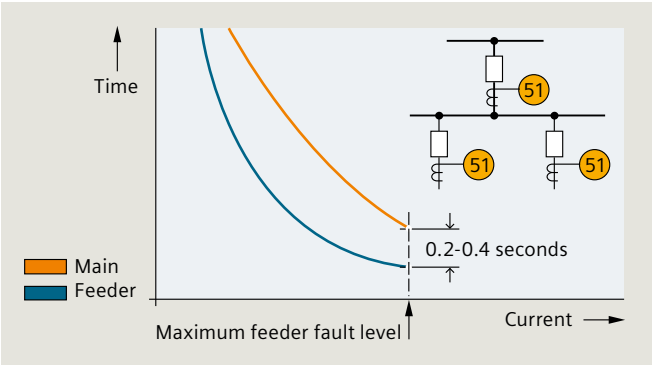

Fig. 6.2-60: Coordination of inverse-time relays

If the same characteristic is used for all relays, or if when the upstream relay has a steeper characteristic (e.g., very much over normal inverse), then selectivity is automatically fulfilled at lower currents.

Differential relay
Transformer differential relays are normally set to pickup values between 20 and 30 % of the rated current. The higher value has to be chosen when the transformer is fitted with a tap changer.

Restricted earth-fault relays and high-resistance motor / generator differential relays are, as a rule, set to about 10 % of the rated current.

Instantaneous overcurrent protection
This is typically applied on the final supply load or on any protection relay with sufficient circuit impedance between itself and the next downstream protection relay. The setting at transformers, for example, must be chosen about 20 to 30 % higher than the maximum through-fault current. The relay must remain stable during energization of the transformer.

1 2 3 4 5 6 7 8 9 10 11 12 ?

Calculation example

The feeder configuration of fig. 6.2-61 and the associated load and short-circuit currents are given. Numerical overcurrent relays 7SJ80 with normal inverse-time characteristics are applied.

The relay operating times, depending on the current, can be derived from the diagram or calculated with the formula given in fig. 6.2-62, see next page.

The I_p/I_N settings shown in fig. 6.2-61 have been chosen to get pickup values safely above maximum load current.

This current setting should be lowest for the relay farthest downstream. The relays further upstream should each have equal or higher current settings.

The time multiplier settings can now be calculated as follows:

Station C:

- For coordination with the fuses, the fault in location F1 is considered.
  The short-circuit current $I_{scc.}$ max. related to 13.8 kV is 523 A.
  This results in 7.47 for I/I_p at the overcurrent relay in location C.
- With this value and T_p = 0.05, an operating time of t_A = 0.17 s can be derived from fig. 6.2-60.

This setting was selected for the overcurrent relay to get a safe grading time over the fuse on the transformer low-voltage side. Safety margin for the setting values for the relay at station C are therefore:

- Pickup current: I_p/I_N = 0.7
- Time multiplier: T_p = 0.05.

Station B:

The relay in B has a primary protection function for line B-C and a backup function for the relay in C. The maximum through-fault current of 1.395 A becomes effective for a fault in location F2. For the relay in C, an operating time time of 0.11 s (I/I_p = 19.93) is obtained.

It is assumed that no special requirements for short operating times exist, and therefore an average time grading interval of 0.3 s can be chosen. The operating time of the relay in B can then be calculated.

- t_B = 0.11 + 0.3 = 0.41 s
- Value of $I_p/I_N = \frac{1{,}395\ \text{A}}{220\ \text{A}}$ = 6.34 (fig. 6.2-61)
- With the operating time 0.41 s and I_p/I_N = 6.34, T_p = 0.11 can be derived from fig. 6.2-70, see next page.

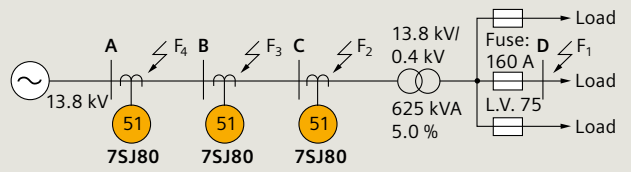

Station	Max. load A	$I_{SCC.\ max}$[1] A	CT ratio	I_p/I_N[2]	I_{prim}[3] A	$I/I_p = \frac{I_{scc.\ max}}{I_{prim}}$
A	300	4,500	400/5	1.0	400	11.25
B	170	2,690	200/5	1.1	220	12.23
C	50	1,395	100/5	0.7	70	19.93
D	–	523	–	–	–	–

[1] $I_{SCC.\ max}$ = Maximum short-circuit current
[2] I_p/I_N = Relay current multiplier setting
[3] I_{prim} = Primary setting current corresponding to I_p/I_N

Fig. 6.2-61: Time grading of inverse-time relays for a radial feeder

The setting values for the relay at station B are:

- Pickup current: I_p/I_N = 1.1
- Time multiplier T_p = 0.11

Given these settings, the operating time of the relay in B for a close fault in F3 can also be checked: The short-circuit current increases to 2,690 A in this case (fig. 6.2-69). The corresponding I/I_p value is 12.23.

1 2 3 4 5 6 7 8 9 10 11 12 ?

- With this value and the set value of $T_p = 0.11$, an operating time of 0.3 s is obtained again (fig. 6.2-62).

Station A:

- Adding the time grading interval of 0.3 s, the desired operating itme is $t_A = 0.3 + 0.3 = 0.6$ s.

Following the same procedure as for the relay in station B, the following values are obtained for the relay in station A:

- Pickup current: $I_p / I_N = 1.0$
- Time multiplier $T_p = 0.17$
- For the close-in fault at location F4, an operating time of 0.48 s is obtained.

The normal way

To prove the selectivity over the whole range of possible short-circuit currents, it is normal practice to draw the set of operating curves in a common diagram with double log scales. These diagrams can be calculated manually and drawn point-by-point or constructed by using templates.

Today, computer programs are also available for this purpose. Fig. 6.2-63 shows the relay coordination diagram for the selected example, as calculated by the Siemens program SIGRADE (Siemens Grading Program).

Note:

To simplify calculations, only inverse-time characteristics have been used for this example. About 0.1 s shorter operating times could have been reached for high-current faults by additionally applying the instantaneous zones I>> of the 7SJ60 relays.

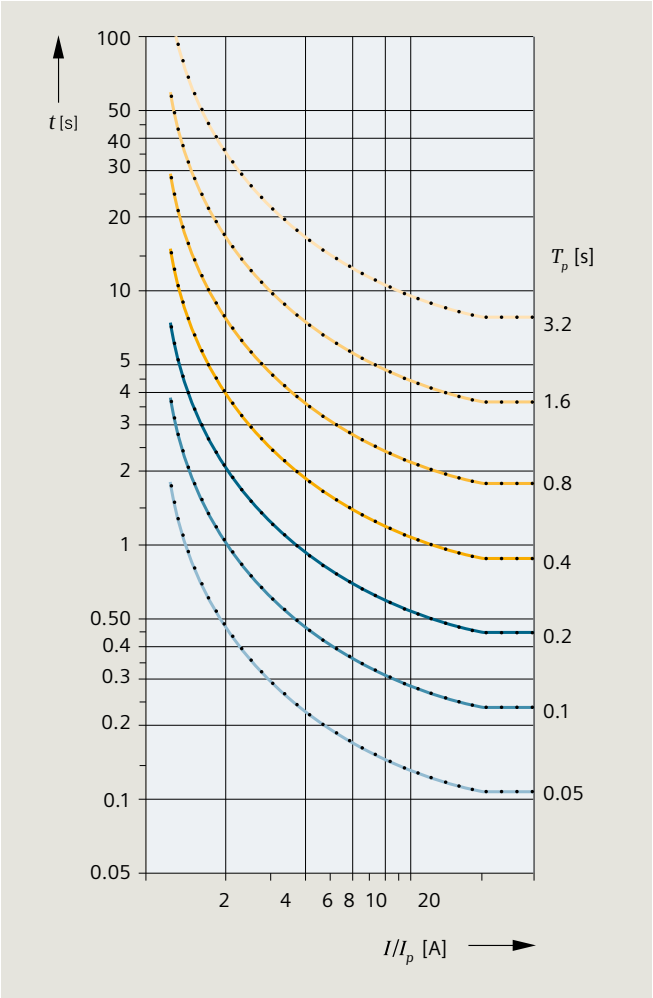

Fig. 6.2-62: Normal inverse-time characteristic of the 7SJ60 relay

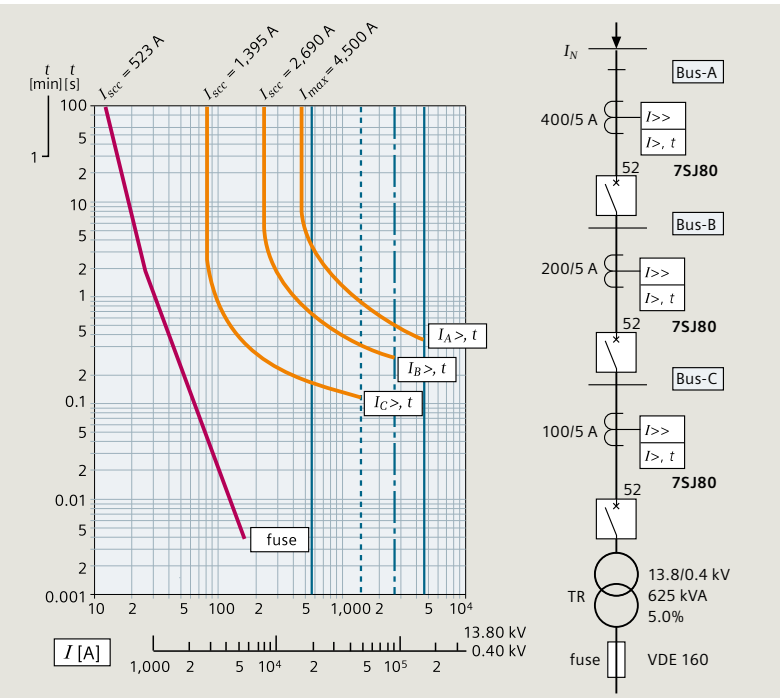

Setting range setting	
$I_p = 0.10 - 4.00\ I_N$ $T_p = 0.05 - 3.2$ s $I>> = 0.1 - 25\ I_N$	$I_p = 1.0\ I_N$ $T_p = 0.17$ s $I>> = \infty$
$I_p = 0.10 - 4.00\ I_N$ $T_p = 0.05 - 3.2$ s $I>> = 0.1 - 25\ I_N$	$I_p = 1.0\ I_N$ $T_p = 0.11$ s $I>> = \infty$
$I_p = 0.10 - 4.00\ I_N$ $T_p = 0.05 - 3.2$ s $I>> = 0.1 - 25\ I_N$	$I_p = 0.7\ I_N$ $T_p = 0.05$ s $I>> = \infty$
HRC fuse 160 A	

Fig. 6.2-63: Overcurrent-time grading diagram

Coordination of overcurrent relays with fuses and low-voltage trip devices
The procedure is similar to the above-described grading of overcurrent relays. A time interval of between 0.1 and 0.2 s is usually sufficient for a safe time coordination (fig. 6.2-64).

Strong and extremely inverse characteristics are often more suitable than normal inverse characteristics in this case. Fig. 6.2-65 shows typical examples.

Simple distribution substations use a power fuse on the secondary side of the supply transformers (fig. 6.2-65a).

In this case, the operating characteristic of the overcurrent relay at the infeed has to be coordinated with the fuse curve.

Normalinverse

$$t = \frac{0.14}{(I/I_p)^{0.02} - 1} \cdot T_p(\mathrm{s})$$

Strong inverse characteristics may be used with expulsion-type fuses (fuse cutouts), while extremely inverse versions adapt better to current limiting fuses.

In any case, the final decision should be made by plotting the curves in the log-log coordination diagram.

Electronic trip devices of LV breakers have long-delay, short-delay and instantaneous zones. Numerical overcurrent relays with one inverse-time and two definite-time zones can closely be adapted to this (fig. 6.2-65b).

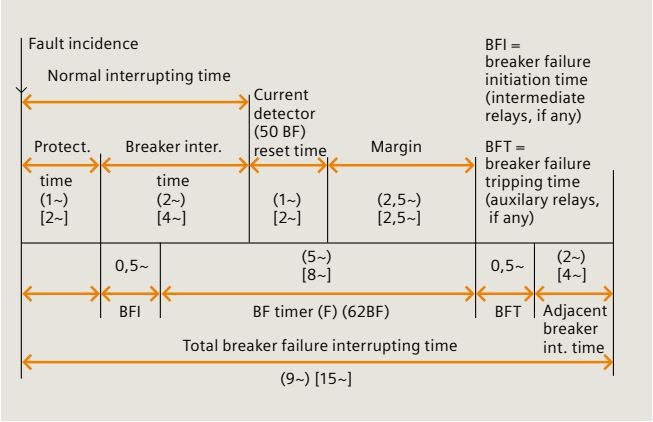

Fig. 6.2-64: Time coordination of BF time setting

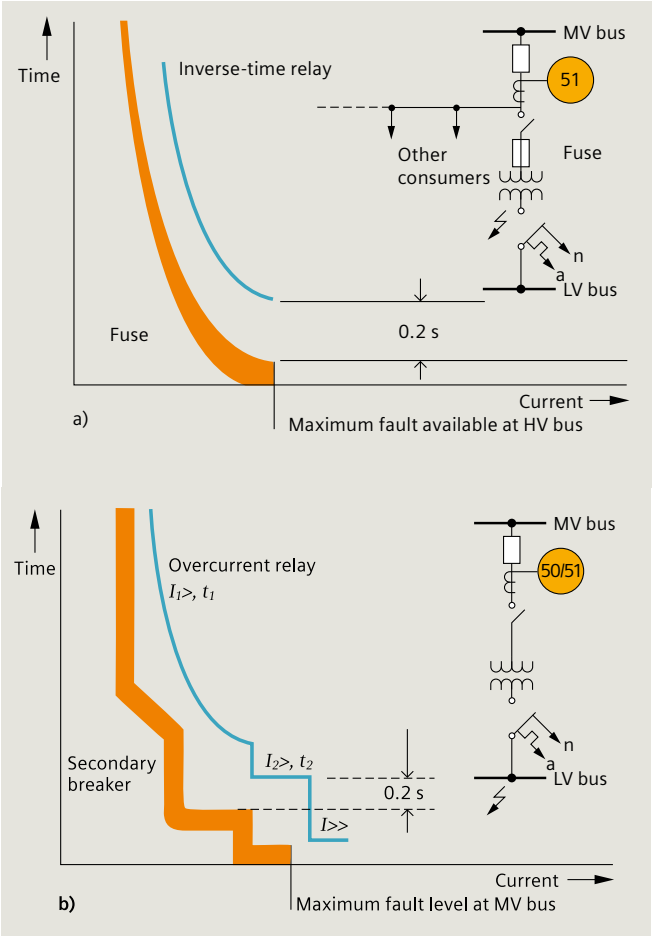

Fig. 6.2-65 a + b: Coordination of an overcurrent relay with an MV fuse and low-voltage breaker trip device

1
2
3
4
5
6
7
8
9
10
11
12
?

Coordination of distance relays

The distance relay setting must take into account the limited relay accuracy, including transient overreach (5 %, according to IEC 60255-6), the CT error (1 % for class 5P and 3 % for class 10P) and a security margin of about 5 %. Furthermore, the line parameters are often only calculated, not measured. This is a further source of errors. A setting of 80 to 85 % is therefore common practice; 80 % is used for mechanical relays, while 85 % can be used for the more accurate numerical relays.

Where measured line or cable impedances are available, the protected zone setting may be extended to 90 %. The second and third zones have to keep a safety margin of about 15 to 20 % to the corresponding zones of the following lines. The shortest following line always has to be considered (fig. 6.2-66).

As a general rule, the second zone should at least reach 20 % over the next station to ensure backup for busbar faults, and the third zone should cover the longest following line as backup for the line protection.

Grading of zone times

The first zone normally operates undelayed. For the grading of the time delays of the second and third zones, the same rules as for overcurrent relays apply (fig. 6.2-67). For the quadrilateral characteristics (relays 7SA6 and 7SA5), only the reactance values (X values) have to be considered for the protected zone setting. The setting of the R values should cover the line resistance and possible arc or fault resistances. The arc resistance can be roughly estimated as follows:

$$R_{Arc} = \frac{2.5 \cdot l_{arc}}{I_{SCC\,Min}} \; [\Omega]$$

l_{arc} = Arc length in mm

$I_{SCC\,Min}$ = Minimum short-circuit current in kA

- Typical settings of the ratio R / X are:
  - Short lines and cables (≤ 10 km): R / X =2 to 6
  - Medium line lengths < 25 km: R / X =2
  - Longer lines 25 to 50 km: R / X =1.

Shortest feeder protectable by distance relays

The shortest feeder that can be protected by underreaching distance zones without the need for signaling links depends on the shortest settable relay reactance.

$$X_{Prim\,Min} = X_{Relay\,Min} \cdot \frac{VT_{ratio}}{CT_{ratio}}$$

$$l_{min} = \frac{X_{Prim\,Min}}{X'_{Line}}$$

The shortest setting of the numerical Siemens relays is 0.05 Ω for 1 A relays, corresponding to 0.01 Ω for 5 A relays. This allows distance protection of distribution cables down to the range of some 500 meters.

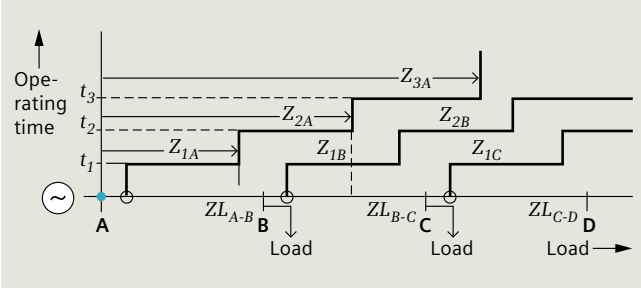

$Z_{1A} = 0.85 \cdot ZL_{A-B}$
$Z_{2A} = 0.85 \cdot (ZL_{A-B} + Z_{1B})$
$Z_{2A} = 0.85 \cdot (ZL_{A-B} + Z_{2B})$

Fig. 6.2-66: Grading of distance zones

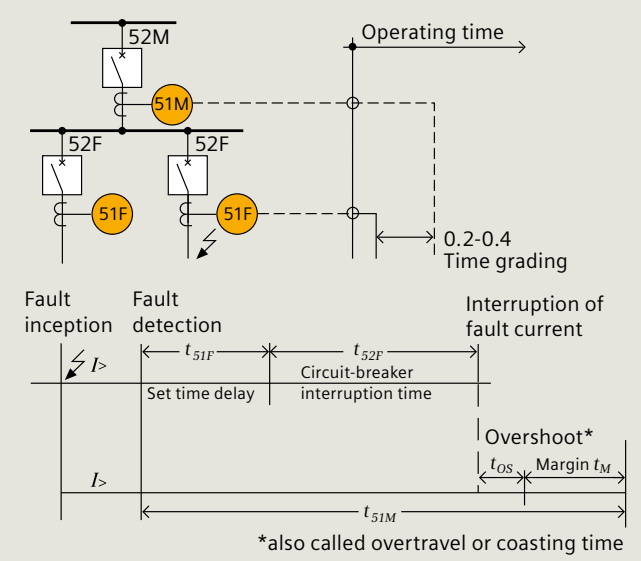

Time grading	
$t_{rs} = t_{51M} - t_{51F} = t_{52F} + t_{OS} + t_M$	
Example 1	t_{TG} =0.10 s + 0.15 s + 0.15 s = 0.40 s
Oil circuit-breaker	t_{52F} = 0.10 s
Mechanical relays	t_{OS} = 0.15 s
Safety margin for measuring errors, etc.	t_M = 0.15 s
Example 2	t_{TG} = 0.08 + 0.02 + 0.10 = 0.20 s
Vacuum circuit-breaker	t_{52F} = 0.08 s
Numerical relays	t_{OS} = 0.02 s
Safety margin	t_M = 0.10 s

Fig. 6.2-67: Time grading of overcurrent-time relays

Breaker failure protection setting
Most numerical relays in this guide provide breaker failure (BF) protection as an integral function. The initiation of the BF protection by the internal protection functions then takes place via software logic. However, the BF protection function may also be initiated externally via binary inputs by an alternate protection. In this case, the operating time of intermediate relays (BFI time) may have to be considered. Finally, the tripping of the infeeding breakers requires auxiliary relays, which add a small time delay (BFI) to the overall fault clearing time. This is particularly the case with one-breaker-and-a-half or ring bus arrangements where a separate breaker failure relay (7VK8) is used per breaker.

The decisive criterion of BF protection time coordination is the reset time of the current detector (50BF), which must not be exceeded under any condition during normal current interruption. The reset times specified in the Siemens numerical relay manuals are valid for the worst-case condition: interruption of a fully offset short-circuit current and low current pickup setting (0.1 to 0.2 times rated CT current).

The reset time is 1 cycle for EHV relays (7SA8, 7VK8) and 1.5 to 2 cycles for distribution type relays (7SJ**).

Fig. 6.2-68 shows the time chart for a typical breaker failure protection scheme. The stated times in parentheses apply for transmission system protection and the times in square brackets for distribution system protection.

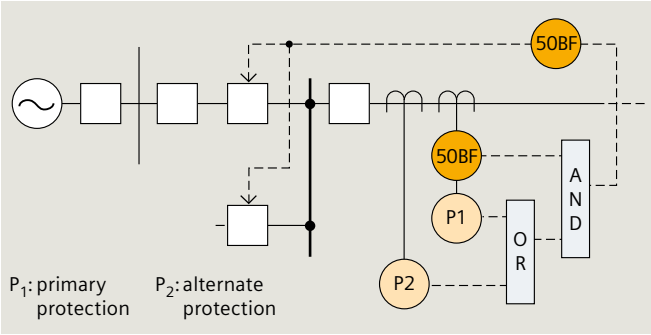

Fig. 6.2-68: Breaker failure protection, logic circuit

CT requirements for protection relays

Instrument transformers
Instrument transformers must comply with the applicable IEC recommendations IEC 60044 and 60186 (PT), ANSI / IEEE C57.13 or other comparable standards.

Voltage transformers
Voltage transformers (VT) in single-pole design for all primary voltages have typical single or dual secondary windings of 100, 110 or 115 V / √3, with output ratings between 10 and 50 VA suitable from most applications with digital metering and protection equipment, and accuracies of 0.1 % to 6 % to suit the particular application. Primary BIL values are selected to match those of the associated switchgear.

Current transformers
Current transformers (CT) are usually of the single-ratio type with wound or bar-type primaries of adequate thermal rating. Single, double or triple secondary windings of 1 or 5 A are standard. 1 A rating should, however, be preferred, particularly in HV and EHV substations, to reduce the burden of the connected lines. Output power (rated burden in VA), accuracy and saturation characteristics (rated symmetrical short-circuit current limiting factor) of the cores and secondary windings must meet the requirements of the particular application.The CT classification code of IEC is used in the following:

- Measuring cores
  These are normally specified with 0.2 % or 0.5 % accuracy (class 0.2 or class 0.5), and an rated symmetrical short-circuit current limiting factor FS of 5 or 10.
  The required output power (rated burden) should be higher than the actually connected burden. Typical values are 2.5, 5 or 10 VA. Higher values are normally not necessary when only electronic meters and recorders are connected.
  A typical specification could be: 0.5 FS 10, 5 VA.
- Cores for billing values metering
  In this case, class 0.25 FS is normally required.
- Protection cores
  The size of the protection core depends mainly on the maximum short-circuit current and the total burden (internal CT burden, plus burden of connected lines, plus relay burden). Furthermore, a transient dimensioning factor has to be considered to cover the influence of the DC component in the short-circuit current.

The requirements for protective current transformers (fig 6.2-69 and fig. 6.2-70, see next pages) for transient performance are specified in IEC 60044-6. In many practical cases, iron-core CTs cannot be designed to avoid saturation under all circumstances because of cost and space reasons, particularly with metal-enclosed switchgear.

The Siemens relays are therefore designed to tolerate CT saturation to a large extent. The numerical relays proposed in this guide are particularly stable in this case due to their integrated saturation detection function. The current transformer requirements for SIPROTEC 7UT8 transformer protection devices are given as an example in order to provide an overview aout how to handle CT requirements during protection calculation.

For all SIPROTEC 5 devices, detailed requirement tables are included in the device manuals.The latest manual version should be used for the CT requirement calculation.

More accurate dimensioning can be done by more intensive calculation with Siemens' CTDIM (www.siemens.com/ctdim) program. Results of CTDIM are released by the relay manufacturer.

1
2
3
4
5
6
7
8
9
10
11
12
?

Requirements for Current Transformer of Transformer Differential Protection (Phase Current Transformer)

Transformer Type	Required Factor ALF'		
	Minimum	**Internal Fault**	**External Fault**
IEC 5P, IEC 10P[1] (up to 80% remanence)	25	$\geq 0.5 \cdot \frac{I_{int.max}}{I_{pr}}$	$\geq 2 \cdot \frac{I_{ext.max}}{I_{pr}}$
IEC 5PR, IEC 10PR[2]	12.5	$\geq 0.4 \cdot \frac{I_{int.max}}{I_{pr}}$	$\geq 1.5 \cdot \frac{I_{ext.max}}{I_{pr}}$
	Required Product $K_{td} \cdot K_{SSC}$		
IEC TPX (up to 80 % remanence)	25	$\geq 0.5 \cdot \frac{I_{int.max}}{I_{pr}}$	$\geq 2 \cdot \frac{I_{ext.max}}{I_{pr}}$
IEC TPY	12.5	$\geq 0.4 \cdot \frac{I_{int.max}}{I_{pr}}$	$\geq 1.5 \cdot \frac{I_{ext.max}}{I_{pr}}$
IEC TPZ	12.5	$\geq 0.4 \cdot \frac{I_{int.max}}{I_{pr}}$	$\geq 1.5 \cdot \frac{I_{ext.max}}{I_{pr}}$
	Required Knee-Point Voltage E_k (Vrms)		
IEC PX (up to 80 % remanence)	$20 \cdot I_{sr} \cdot R_s$	$\geq 0{,}4 \cdot \frac{I_{Int.max}}{I_{pr}} \cdot I_{sr} \cdot R_s$	$\geq 1{,}6 \cdot \frac{I_{Ext.max}}{I_{pr}} \cdot I_{sr} \cdot R_s$
IEC PXR	$10 \cdot I_{sr} \cdot R_s$	I_{pr}	I_{pr}
	Required Transformer Terminal Voltage V_{ta} (Vrms)		
ANSI C (I_{sr} = 5 A) (up to 80 % remanence)	$25 \cdot I_{sr} \cdot R_{ba}$	$\geq 0{,}5 \cdot \frac{I_{Int.max}}{I_{pr}} \cdot I_{sr} \cdot R_{ba}$	$\geq 2 \cdot \frac{I_{Ext.max}}{I_{pr}} \cdot I_{sr} \cdot R_{ba}$

Remanence leads to an earlier saturation which, in general, is critical for the differential protection. For new systems, Siemens recommends anti-remanence cores in the classes 5PR, PXR and TPY. In case of the high direct-current components to be expected, Siemens recommends the class TPZ, so that an overfunction with external faults is avoided.

ALF'	Operational accuracy limit factor	I_{sr}	Secondary rated current of the transformer
ALF'	$ALF' = ALF \cdot \frac{R_{ct} + R_b}{R_{ct} + R_{ba}}$	$I_{Int.max}$	Maximum internal symmetric fault current
ALF	Rated accuracy limit factor	$I_{Ext.max}$	Maximum external symmetric fault current
R_{ct}	Secondary winding resistance	K_{td}	Transient rated dimensioning factor
R_b	Ohmic rated burden	K_{SSC}	Factor of the symmetric rated short-circuit current = I_{psc}/I_{pr}
R_{ba}	Connected ohmic rated resistive burden	E_k	Knee-point voltage
R_s	($R_{ct} + R_{ba}$)	V_t	Rated terminal voltage with 20-fold rated current and rated burden R_b
I_{pr}	Primary rated current of the transformer	V_{ta}	Current terminal voltage with 20-fold rated current and current burden R_{ba}

[1] fault angle is not specified in IEC 61869-2, therefore, the Class 10P for the differential protection is not recommended.

[2] fault angle is not specified in IEC 61869-2, therefore, the Class 10P for the differential protection is not recommended.

Fig. 6.2-69: Requirements for current transformer

Example

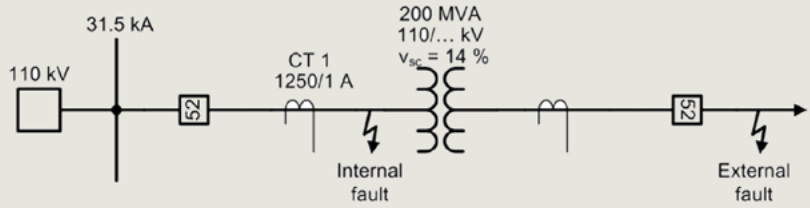

[dwwdlanf-301012-01.tif, 1, en_US]

Layout of Current Transformer 1 (Transf. 1):

$I_{int.max}$ = 31.5 kA

Transformer rated current $I_{N,Tr}$ = 200 000 kVA/(√3 · 100 kV) = 1050 A (110 kV side)

$I_{ext.max} = I_{N,Tr} \cdot 100\ \%/u_k$ = 1050 A · 100 %/14 % = 7498 A (110 kV side)

$K_{SSC(int)}$ = 31 500 A/1250 A = 25.2, $K_{SSC(ext)}$ = 7498 A/1250 A = 6.0

<u>a) IEC class 5P</u>

Internal fault: ALF' = 0.5 · 31 500 A/1250 A = 12.6

External fault: ALF' = 2 · 7498 A/1250 A = 12 → **but minimum 25**

Result:

Operating accuracy limiting factor of **≥ 25**, for example: 5P30, $R_b = S_r/I_{sr}^{\ 2}$ ≥ connected burden R_{ba}

(for example: S_r = 2.5 VA or 5 VA)

<u>b) IEC class TPZ</u>

Internal fault: $K_{td} \cdot K_{SSC}$ = 0.4 · 31 500 A/1250 A = 10.08

External fault: $K_{td} \cdot K_{SSC}$ = 1.5 · 7498 A/1250 A = 9 → **but minimum 12.5**

Result:

The product $K_{td} \cdot K_{SSC}$ must be ≥ 12.5, for example: $K_{SSC} = K_{SSC(int)}$ ≈ 25 and K_{td} = 0.5

Rated burden R_b ≥ connected burden R_{ba} (for example, R_b = 2.5 Ω or 5 Ω)

<u>c) IEC class PX</u>, assumption: R_{ct} = 4.3 Ω, R_{ba} = 1.5 Ω

Internal fault:

$$E_k \geq 0.4 \cdot \frac{I_{int.max}}{I_{pr}} \cdot I_{sr} \cdot R_s \geq 0.4 \cdot \frac{31500\ A}{1250\ A} \cdot 1\ A \cdot (4.3\ \Omega + 1.5\ \Omega) \geq 58.5\ Vrms$$

[fofintek-161112-01.tif, 2, en_US]

External fault:

$$E_k \geq 1.6 \cdot \frac{I_{Ext.max}}{I_{pr}} \cdot I_{sr} \cdot R_s \geq 1.6 \cdot \frac{7498\ A}{1250\ A} \cdot 1\ A \cdot (4.3\ \Omega + 1.5\ \Omega) \geq 55.7\ Vrms$$

[fofextek-161112-01.tif, 2, en_US]

but minimum $E_k = 20 \cdot I_{sr} \cdot R_s$ = 20 · 1 A · (4.3 Ω + 1.5 Ω) = 116 Vrms

Result:

The PX transformer must have a knee-point voltage of ≥ 116 Vrms, for example: E_k = 150 Vrms.

Fig. 6.2-70: Requirements for current transformer

For further information please visit:
siemens.com/protection

6.3 Substation automation

In the past, the operation and monitoring of energy automation and substation equipment was expensive, as it required staff on site. Modern station automation solutions enable the remote monitoring and control of all assets based on a consistent communication platform that integrates all elements from bay level all the way to the control center. Siemens substation automation products can be precisely customized to meet user requirements for utilities, as well as for industrial plants and bulk consumers. A variety of services from analysis to the operation of an entire system round out Siemens' range of supply, and ensure complete asset monitoring. By acquiring and transmitting all relevant data and information, substation automation and telecontrol technologies from Siemens are the key to stable grid operation. New applications, such as online monitoring, can easily be integrated in existing IT architectures. This is how Siemens enables provident asset management and makes it possible to have all equipment optimally automated throughout its entire lifecycle.

6.3.1 Overview and solutions

During the last years, the influences on the business of the power supply companies have changed a lot. The approach to power grid operation has changed from a static quasi-stable interpretation to a dynamic operational management of the electric power grid. Enhanced requirements regarding the economy of lifetime for all assets in the grid are gaining importance.

As a result, the significance of automation systems has increased a lot, and the requirements for control, protection and remote control have undergone severe changes of paradigm:

- Flexible and tailor-made solutions for manifold applications
- Secure and reliable operation management
- Cost-efficient investment and economic operation
- Efficient project management
- Long-term concepts, future-proof, and open for new requirements.

Siemens energy automation solutions offer an answer to all current issues of today's utilities. Based on a versatile product portfolio and many years of experience, Siemens plans and delivers solutions for all voltage levels and all kinds of substations (fig. 6.3-1).

Siemens energy automation solutions are available both for refurbishment and new turnkey substations, and can be used in classic centralized or distributed concepts. All automation functions can be performed where they are needed.

Fig. 6.3-1: Substation automation products

Flexible and tailor-made solutions for manifold applications

Siemens energy automation solutions offer a variety of standardized default configurations and functions for many typical tasks. Whereas these defaults facilitate the use of the flexible products, they are open for more sophisticated and tailor-made applications (fig. 6.3-2). Acquisition of all kinds of data, calculation and automation functions, as well as versatile communication can be combined in a very flexible way to form specific solutions, and fit into the existing surrounding system environment.

The classical interface to the primary equipment is centralized with many parallel cables sorted by a marshalling rack. In such an environment, central protection panels and centralized RTUs are standard. Data interfaces can make use of high density I/O elements in the rack, or of intelligent terminal modules, which are even available with DC 220 V for digital inputs and direct CT / VT interfaces.

Even in such configurations, the user can benefit from full automation and communication capabilities. This means that classical RTU solution and interfaces to other IEDs are included, and HMIs for station operation and supervision can be added as an option. Also, the protection relays are connected to the RTU so that data from the relays are available both at the station operation terminal and in the control centers.

All members of the SICAM RTU family can be equipped with different combinations of communication, both serial and Ethernet (TCP / IP). Different protocols are available, mainly IEC standards, e.g., IEC 60870-5-101 / 103 / 104 IEC 61850, IEC 62056-21, but also a lot of other well-known protocols from different vendors.

In new substations, the amount of cabling can be reduced by decentralizing the automation system. Both protection relays and bay controllers are situated as near as possible to the primary switchgear. Typically, they are located in relay houses (EHV) or in control cabinets directly beneath HV GIS feeders. The rugged design with maximum EMC provides high security and availability.

The flexible Siemens solutions are available for every kind of substation:

- For different voltage levels, from ring main unit to transmission substation
- For new substations or refurbishment
- For gas-insulated or air-insulated switchgear
- For indoor or outdoor design
- For manned or unmanned substations.

Communication is the backbone of every automation system. Therefore, Siemens solutions are designed to collect the data from the high-voltage equipment and present them to the different users: the right information for the right users at the right place and time with the required quality and security.

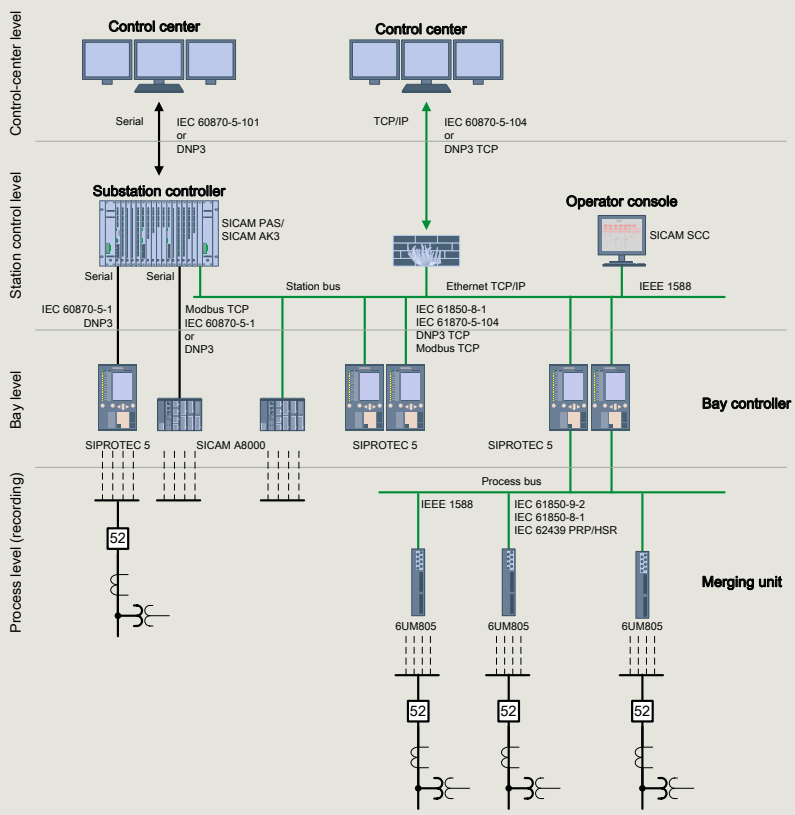

Fig. 6.3-2: Example for substation automation

Here are some default examples for typical configurations. They are like elements which can be combined according to the respective requirements (also see fig 6.3-3). The products, which are the bricks of the configurations, are an integral part of the harmonized system behavior, and support according to the principle of single-point data input. This means that multiple data input is avoided. Even if different engineering tools are necessary for certain configurations, these tools exchange their data for more efficient engineering.

Example of a small medium-voltage substation: Typically, it consists of 4 to 16 MV feeders and is unmanned. In most cases, combined bay control and protection devices are located directly in the low-voltage compartments of the switchgear panels.

A station operation terminal is usually not required, because such substations are normally remote-controlled, and in case of local service / maintenance they are easy to control at the front side of the switchgear panels.

Example of a distribution substation in industry supply: In principle, they are similar to the configuration above, but they are often connected to a control center via local area network (LAN). A distinctive feature is the interface to low-voltage distribution boards and sometimes even to the industrial automation system for data exchange. Here, the compatibility with SIMATIC products simplifies system integration.

A sub-transmission substation requires even more complexity: 2 or 3 voltage levels have to be equipped; a station operation terminal is usually required; more communication interfaces to external locations, separated control and protection devices on HV level, powerful LAN based on IEC 61850, and remote maintenance access are typical features of such applications.

In transmission substations, typically two to four voltage levels are to be automated. According to the high importance of such substations, availability is of the highest priority. Therefore, redundancy at substation level is generally required, both for station control units and station operation. Multiple operator stations are often required, multiple communication links to different control centers or neighboring substations are standard. Although most standard applications are IEC protocols, specific protocols also have to be offered for interfacing existing third-party devices. Complex automation functions support the operation and maintenance of such substations, such as voltage regulation by controlling on-load tap changers, synchrocheck, automatic command sequences, etc.

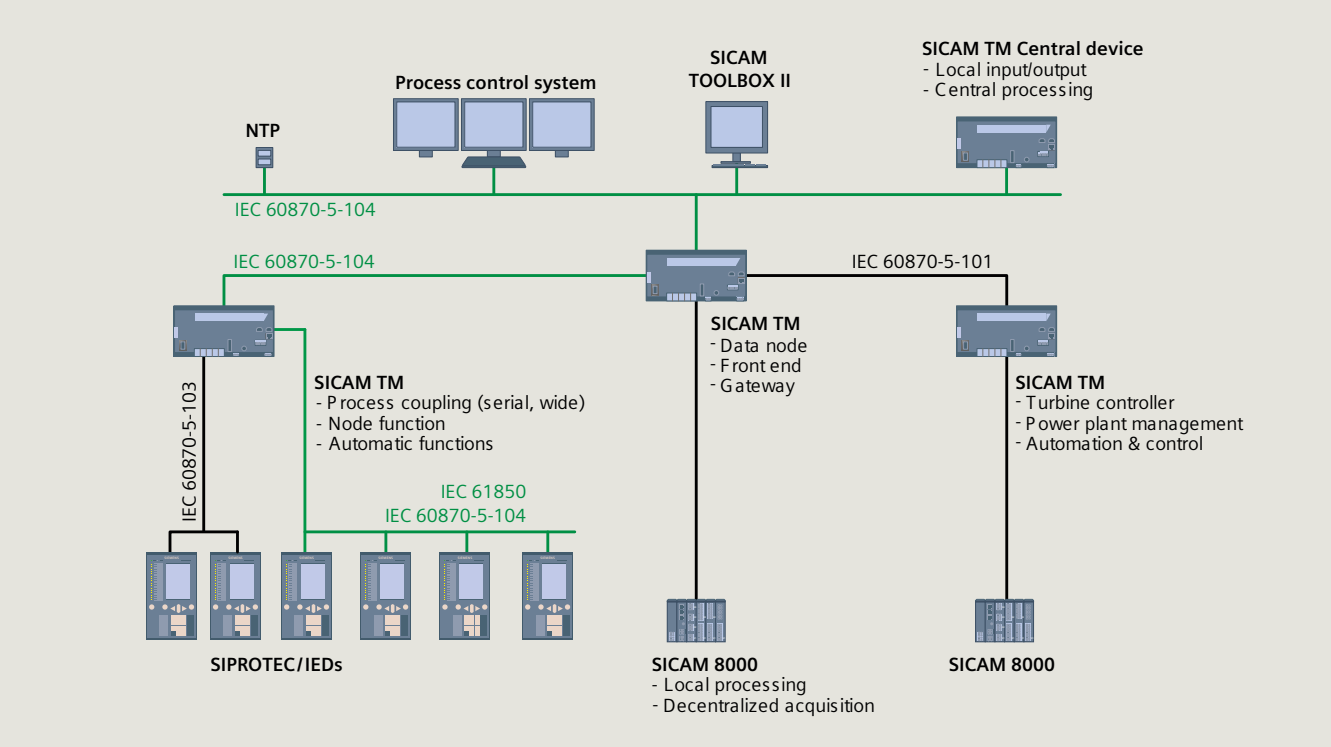

Fig. 6.3-3: Example of a distribution substation in industry supply

1
2
3
4
5
6
7
8
9
10
11
12

The devices are as flexible as the configurations: Bay controllers, protection relays, station control units, station operation units, and RTUs can be configured from small to very large. The well-known products of the SICAM and SIPROTEC series are a well-proven base for the Siemens solutions.

Secure and reliable operation

Siemens solutions provide human-machine interfaces (HMI) for every control level and support the operators with reliable information and secure, easy-to-use control features.

At feeder level:
- Conventional panels with pushbuttons and instruments for refurbishment
- Electronic front panels combined with bay control units (default)
- Access points for remote terminals connected to the station operation units
- Portable touch panels with wireless access in defined areas.

At substation level:
- Single or redundant HMI
- Distributed server/client architectures with multiple and/or remote terminals
- Interface to office automation.

All images and pictures of the HMIs are designed according to ergonomic requirements, so as to give the operators clear information that is easy to use. Control commands are only accepted if access rights are met, the local/remote switches are in the right position, and the multi-step command sequence is actively handled. Care is taken that only commands which are intended and explicitly given are processed and sent to the switchgear.

Automation functions support operation:
- Interlocking
- Feeder or remote blocking (option)
- Command sequences (option)
- Automatic recloser (option)
- Automatic switchover (option)
- etc.

All images and pictures of the HMI are organized hierarchically and, for easy access, they guide the user to the required information and to fast alarm recognition. In addition, alarm and event logs, measurement curves, fault records, archives, and flexible reports support the analysis of any situation in the power grid (fig. 6.3-4).

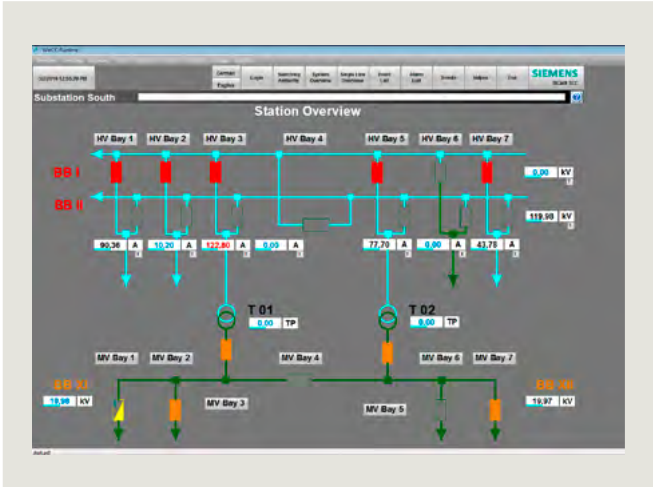

Fig. 6.3-4: Human-machine interface for every control level

For security reasons, only specially authorized personnel is granted access to operation and engineering tools. Flexible access rights are defined for operators, design engineers, and service personnel, and differentiate between engineering access and operation rights.

Security of data transmission is catered for by secure protocols and secure network design. Especially, easy remote access to substations creates the need for such complex measures. The experienced Siemens engineers provide all the necessary knowledge for network security concepts.

1
2
3
4
5
6
7
8
9
10
11
12
?

Cost-efficient investment and economic operation

The customized solutions from Siemens cater for effective investment. Tailor-made configurations and functions make sure that only required items are offered. The efficient tools provide fast and easy engineering, and support all project phases of an automation system, from collection of the substation data to deployment of all needed functions and finally to reporting and archiving. The long lifetime of the involved future-proof products extend the time period between investments into automation systems.

Siemens solutions ensure low cost of ownership, thus taking into account all costs during lifetime. The automation systems are maintenance-free and easy to expand at a later date. Last but not least, the powerful services for remote maintenance (diagnosis, settings, updates, test, etc.) provide a very economic way to keep any substation up-to-date and running.

Simple handling of the solutions is provided by:
- Same look and feel of all HMI on different levels
- Vertical and horizontal interoperability of the involved products
- Plug and play for spare parts by simple exchange of flash cards.

Reduction of engineering effort by:
- Seamless data management, only single data input for whole project
- Easy up and downloads, even remote
- Integrated test tools.

Reduction of service expenses during lifetime by:
- Integrated self-supervision in all components
- Powerful diagnosis in clear text
- Remote access for diagnosis, settings, test, expansions, etc.

Reduction of complexity by seamless communication:
- Worldwide standard IEC 61850 promoted by Siemens
- Integrated IT security concepts
- Latest technology integrated.

Efficient and state-of-the-art projects

The solutions for energy automation are part of the extensive programme, “Siemens One”. This means that energy automation solutions are integrated in different applications of the vast activity and expertise of Siemens:
- Power grids in transmission and distribution
- Complete building automation
- Solutions for pipelines and infrastructure
- Turnkey railway systems.

They all make use of the energy automation solutions and the associated transfer of expertise for efficient project and order execution. Siemens' worldwide engineering centers are always close to the system operators (fig. 6.3-5).

Fig. 6.3-5: The worldwide engineering centers of Siemens

6.3.2 SICAM PAS and SICAM SCC

SICAM PAS (Power Automation System) meets all the demands placed on a distributed substation control system – both now and in the future. Amongst many other standardized communication protocols, SICAM PAS particularly supports the IEC 61850 standard for communication between substations and IEDs. SICAM PAS is an open system and – in addition to standardized data transfer processes – it features user interfaces for the integration of system-specific tasks, offering multiple automation options. SICAM PAS can thus be easily included in existing systems and used for system integration, too. With modern diagnostics, it optimally supports commissioning and maintenance. SICAM PAS is clearly structured and reliable, thanks to its open, fully documented and tested system.

System overview, application and functionality of SICAM PAS

- SICAM PAS is an energy automation solution; its system architecture makes it scalable.
- SICAM PAS is suitable for operating a substation not only from one single station level computer, but also in combination with further SICAM PAS or other station control units. Communication in this network is based on a powerful Ethernet LAN.
- With its features and its modular expandability, SICAM PAS covers a broad range of applications and supports distributed system configurations. A distributed SICAM PAS system operates simultaneously on several computers.
- SICAM PAS can use existing hardware components and communication standards as well as their connections.
- SICAM PAS controls and registers the process data for all devices of a substation, within the scope of the data transfer protocols supported.
- SICAM PAS is a communication gateway. This is why only one single data connection to a higher-level system control center is required.
- SICAM PAS enables integration of a fully graphical process visualization system directly in the substation.
- SICAM PAS simplifies installation and parameterization of new devices, thanks to its intuitive user interface.
- SICAM PAS is notable for its online parameter setting features, particularly when the system has to be expanded. There are no generation times; loading into a target system is not required at all or only required if configuration is performed on a separate engineering PC.
- SICAM PAS features integrated testing and diagnostic functions.
- SICAM PAS' user-friendliness, its operator control logic, its orientation to the Windows world and its open structure ideally suit users' requirements.
- SICAM PAS is developed in accordance with selected security standards and meets modern demands placed on safe communication.

Communication (see chapter 6.5)

System control center connections, distributed process connection, and process visualization

- SICAM PAS operates on the basis of Microsoft Windows operating systems. This means that the extensive support which Windows offers for modern communication protocols is also available with SICAM PAS.
- SICAM PAS was conceived for easy and fast integration of conventional protocols. Please contact Siemens in case of questions about integration of user-specific protocols.
- For the purpose of linking up to higher-level system control centers, the standardized telecontrol protocols IEC 60870-5-101, IEC 60870-5-104 and DNP3 (Level 3) serially and over IP (DNPi), as well as Mobus (serially and over IP), TG 8979 (serially) and CDT (serially) are supported. Security or "safe communication" are gaining more and more importance. Asymmetric encryption enables tap-proof communication connection to higher-level control centers with IEC 60870-5-104 and DNP3 via TCP/IP. For DNP3, authentication can be used as an additional security mechanism.
- Distributed process connection in the substation is possible thanks to the SICAM PAS Device Interface Processor (DIP).
- SICAM PAS can also be set up on computers networked with TCP/IP. Here, one computer performs the task of the so-called "full server". Up to six other computers can be used as DIPs. With this architecture, the system can be adapted to the topological situation and its performance also boosted.
- SICAM PAS allows use of the SICAM SCC process visualization system for central process control and monitoring. For industrial applications, it is easy to configure an interface to process visualization systems via OPC (object linking and embedding for process control).
- SICAM PAS can be configured as an OPC server or as an OPC client. The SICAM PAS process variables – available with the OPC server – can be read and written with OPC clients working either on the same device or on one networked by TCP/IP. This mechanism enables, for example, communication with another process visualization system. The OPC server is included in the basic system. Optionally, this server functionality is also available as OPC XML DA for communication with clients based on other operating systems as well as beyond firewall limits. The OPC client can read and write data from other OPC servers. A typical application could be the connection of SIMATIC programmable controllers. The OPC client is available as an optional package.

- SICAM Diamond can be used to monitor the system interfaces, to indicate switching device states and up-to-date measured values, and also for further diagnostic purposes. Apart from these configuration-free diagnostic views, SICAM Diamond also supports message logging in event and alarm lists as well as process visualization in single-line diagrams, and can thus be used as a simple human-machine interface. Messages and measured values can be archived in files (monthly). On the one hand, SICAM Diamond consists of the Diamond server, which is directly connected with SICAM PAS and prepares the data for access with a web browser, and on the other hand, the SICAM Diamond client as operator interface in the context of the Microsoft Internet Explorer. Except for the Microsoft Internet Explorer, no additional software has to be installed on the web clients. SICAM Diamond allows access to archive files and fault recordings through the world wide web. The archive files can be saved on the web client for evaluation, e.g., with Microsoft Excel. Fault recordings can be visualized directly in the Internet Explorer.

Further station control aspects
During, e.g., maintenance work or for other operational reasons, information exchange with the control centers or the substation itself can be blocked with the telecontrol blocking and bay blocking functions. The telecontrol blocking function can also be configured for specific channels so as to prevent the transfer of information to one particular control center during operation while transfer continues with other control centers. The bay blocking and telecontrol blocking functions act in both the signaling and the command directions. Channel-specific switching authority also makes it possible to distinguish between local control (SICAM SCC) and remote control for the switching direction, but also between control center connections. For these three functions, information-specific exceptions can be declared additionally so that, e.g., certain messages are transmitted despite an activated block, or special commands are processed and issued despite of a defined switching authority. While a 1-out-of-n check is normally effective in IEDs, i.e., only one command is accepted and issued at the same time, an m-out-of-n check is supported on the side of the substation control system with SICAM PAS. This helps to define how many commands can be processed at the same time for all IEDs. Circuit-breakers can be controlled in synchronized/unsynchronized mode.

Automation tasks
can be configured in SICAM PAS with the CFC (Continuous Function Chart), which conforms to IEC 61131. In this editor, tasks are configured graphically by wiring function blocks. SICAM PAS comes with an extensive library of CFC function blocks, developed and system-tested specially for energy automation.

Applications range from generation of simple group indications through switching interlocks to complex operating sequences. Creation of operating sequences is supported by the SFC Editor (Sequential Function Chart).

In this context, additionally preconfigured and system-tested applications such as frequency-based load shedding, transformer monitoring, and SF6 gas monitoring can be optionally licensed. Besides special functional components and CFCs, the scope of supply also covers operating images for SICAM SCC.

Redundancy
SICAM PAS features comprehensive redundancy functions to boost the availability of the station automation system:
- The substation control unit can be used in a duplicate configuration (“system redundancy”)
- The communication to IEDs and RTUs can be redundant (“interface redundancy”)
- Subordinate units can be duplicated (redundancy at the bay control level)
- Subunits that are only designed for communication with one master (e.g., with only one serial interface) can be supported.

The individual applications (communication protocols) operate independently of each other in a hot/standby connection, i.e., a changeover, e.g., of the IEC 61850 client from one station control unit to the other due to a disturbance has no effects on the communication connection to the control center, which remains on the first station control unit without interruption. Apart from a higher stability in unaffected communication connections, the redundancy changeover of affected components takes place within a very short time (depending on application and configuration, between 250 ms and max. 3 sec). Adjustments during operation such as bay/telecontrol blocking, switching authority, but also marking commands to the SoftPLC for operational control of the automation functions, are kept synchronous in both station control units during redundancy operation. The current adjustments are also valid after a redundancy changeover. SICAM SCC communicates simultaneously with both redundant station control units. A redundant structure is also possible for process visualization with SICAM SCC and fault-record archiving with SICAM PQ Analyzer as shown in fig. 6.3-6.

Scope of information

The amount of information to be processed by SICAM PAS is essentially determined by the following factors:

- Computer network concept (multiple-computer network or single-station system)
- Performance data of the hardware used
- Performance data of the network
- Size of the database (RDBMS)
- Rate of change of values.

With a distributed PAS system using a full server and up to 6 DIPs, a maximum of 350 IEDs and 20,000 data points can be supported.

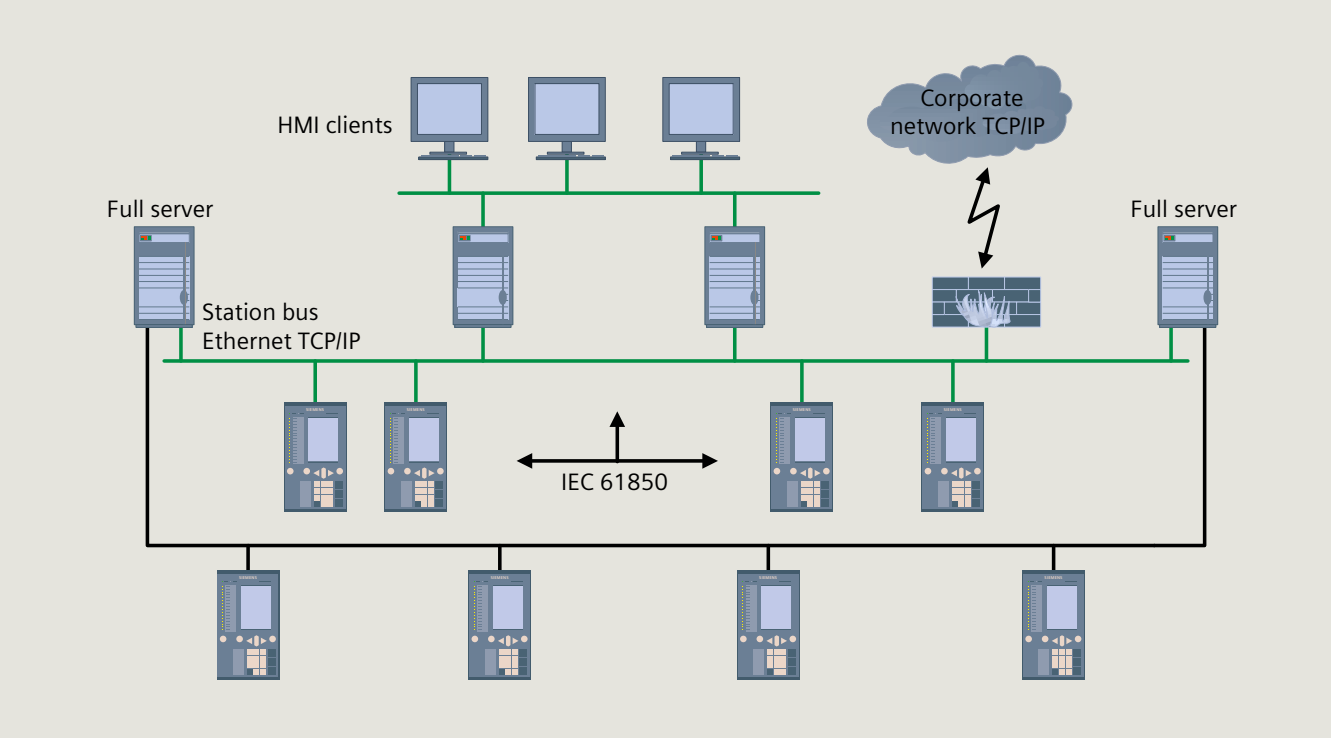

Fig. 6.3-6: Typical redundant configuration: Full server and HMI server are based on a redundant structure to boost availiability

Process visualization with SICAM SCC

In the operation of a substation, SICAM PAS is used for configuration purposes and as a powerful data concentrator. SICAM SCC serves as the process visualization system. Several independent SICAM SCC servers can be connected to one SICAM PAS. Connection of redundant servers is also possible. SICAM SCC supports the connection of several SICAM PAS systems. In the signal lists, the original time stamps are logged in ms resolution as they occur in the devices. With every signal, a series of additional data is also presented to provide information about causes (spontaneous, command), event sources (close range, local, remote), etc. Besides process signals, command signals are also logged. IndustrialX controls are used to control and monitor switchgear. These switching-device objects support four different forms of presentation (IEC, DIN, SINAUT LSA, SICAM) for circuit-breakers and disconnectors. It is also possible to create bitmaps (defined for a specific project) to represent switching devices, and to link them to the objects. For informative visualization, not only nominal and spontaneous flashing are supported, but also the display of various device and communication states (e.g., up-to-date / not up-to-date, feeder and telecontrol blocking, etc.). Measured values and switching device states that are not continuously updated due to, e.g., device or communication failure or feeder blocking, may be updated directly via the operation panel with SICAM SCC (fig. 6.3-7).

In conjunction with the SICAM PAS station unit, the switching devices can be controlled either directly or with "select before operate". When visualizing the process by single-line diagrams, topological coloring can be used. The WinCC add-on SIMATIC web navigator can be used for control and monitoring via the Internet. SICAM Valpro can be used to evaluate measured and metered values. It not only allows a graphical and a tabular display of archived values, but also enables subsequent evaluation functions such as minimum, maximum and averages values (on an hourly or daily basis). For protection devices connected with the protocols IEC 61850, IEC 60870-5-103, as well as PROFIBUS FMS (SIPROTEC 4) or SINAUT LSA ILSA, fault recordings can be retrieved and archived automatically. SICAM PQ Analyzer with its component Incident Explorer is used for management and evaluation of the fault recordings.

SICAM SCC SP1 can also be used as a process visualization system for

- SICAM RTUs
- IEC 61850 devices (for example, SIPROTEC 4).

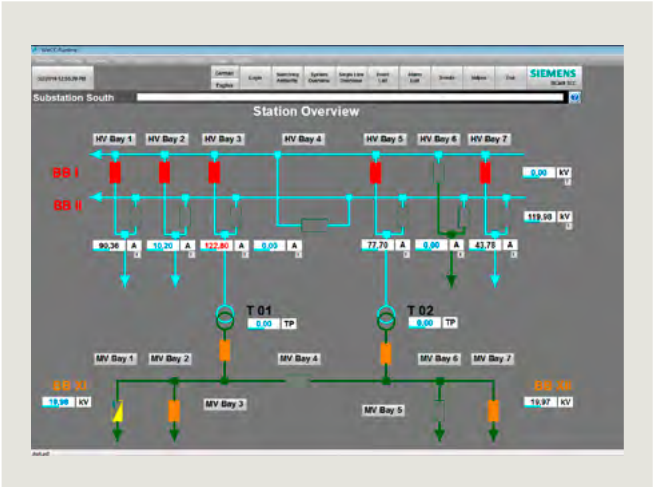

Fig. 6.3-7: Process visualization with SICAM SCC

Communication with SICAM SCC

SICAM SCC for SICAM RTUs

For communication with SICAM AK3, TM, BC, and A8000, the protocol IEC 60870-5-104 or IEC 61850 can be used. Both SICAM TOOLBOX II and SICAM SCC support exchange of configuration data.

SICAM SCC for devices with communication standard IEC 61850

Devices communicating via IEC 61850 can be connected directly to SICAM SCC. For this usage, SCL files (SCD, ICD, CID) are imported. The files are created, for example, with the DIGSI 4 system configurator.

SICAM SCC for SICAM PAS, SICAM RTUs and IEC 61850 devices

With SICAM SCC SP1, a common control and monitoring system for the systems SICAM PAS, SICAM RTUs and for IEC 61850 devices can be realized.

At its core, SICAM SCC uses one of the world's leading process visualization systems: SIMATIC WinCC. SICAM SCC was developed as an add-on so that the electrical processes in both high- and medium-voltage systems could be operated from one station.

It runs together with SIMATIC WinCC on one computer. This integrated solution gives a parallel overview and control of both the industrial manufacturing process and the electrical energy process.

Configuration example see fig. 6.3-8.

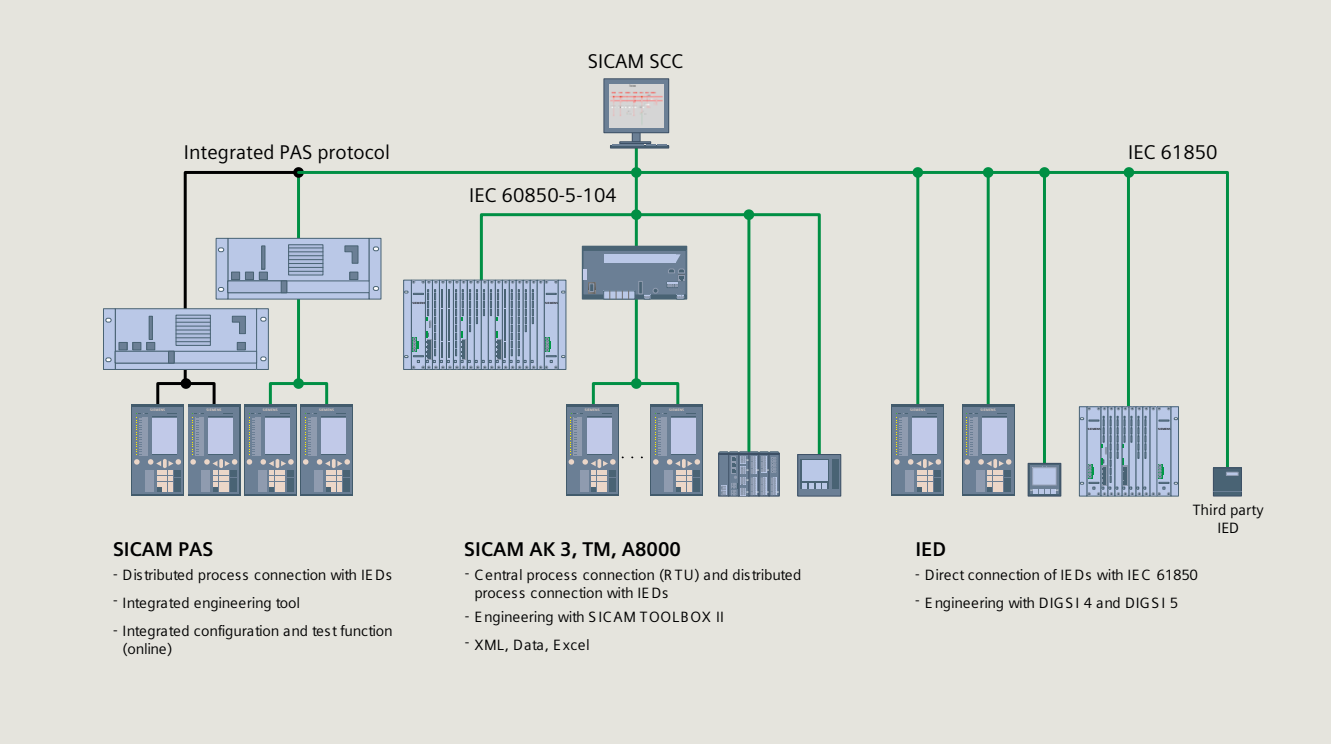

Fig. 6.3-8: Flexible configuration

6.3.3 SICAM Remote Terminal Units (RTUs)

Versatile functionality and high flexibility are fundamental for a modern remote control system. SICAM RTUs adds comprehensive options for communication, automation and process interfaces. The different components of SICAM RTUs offer optimal scalability regarding the number of interfaces and signals. Nevertheless, these components are all based on the same system architecture and the same technology, and are handled with the same engineering tool (SICAM TOOLBOX II and SICAM Web).

All components of the SICAM RTU family are using the same communication modules, and therefore they can use all available protocols. In addition to standards like IEC 60870-5-101/-103/-104 and IEC 61850 (client and/or server), also DNP 3.0 and Modbus are available in addition to a lot of legacy and third-party protocols for connecting third-party devices. Another joint feature of all components is the integrated flash memory card, where all parameters and firmwares are stored. A simple exchange of a component is now possible, just by changing the memory card. SICAM TM fulfils the requirements of SIL (Safety Integrity Level) according to the IEC 61508 standard. SICAM Safety can be used to operate several failsafe SICAM TM or SICAM AK controllers connected via a standard telecontrol protocol.

- SICAM AK 3, the youngest member of the SICAM RTUs product family, is extremely flexible and powerful thanks to the modular, consistent SICAM system architecture. The SICAM AK 3 provides a multitude of possibilities for the automation of widely distributed processes, and is the most powerful device of the SICAM RTUs product family in terms of communication, automation functionality, and redundancy. Automation, telecontrol, and communication functions can be easily combined in full compliance with IEC 61850.
- The SICAM A8000 series is a new modular device range for telecontrol and automation applications in all areas of energy supply. This device series was developed to fulfil the requirements of a broad field of applications.
- SICAM Safety
  The goal of safety technology in automation applications is to minimize the dangers of plant operation for people and environment without restricting production more than necessary.

  The safety requirements of the Machinery Directive 2006 / 4 / EC are found in the following standards:
  – EN ISO 13849 – Safety of machinery – Safety-related parts of control systems.
  – IEC 61508 / 62061 – Safety of machinery – Functional safety of safety-related electronic control systems.

  SICAM Safety embodies the necessary safety funtions in hydropower plants, in the oil and gas industry or in the railways.

All components of the ACP family are using the same communication modules, and therefore they can use all available protocols. In addition to standards like IEC 60870-5-101 / 103 / 104 and IEC 61850 (client and/or server), also DNP3 and Modbus are available in addition to a lot of legacy and third-party protocols for connecting third-party devices.

Another joint feature of all components is the integrated flash memory card, where all parameters and firmwares are stored. A simple exchange of a component is now possible, just by changing the memory card.

The SICAM TOOLBOX II offers all functions for an integrated, seamless engineering of complete projects, and works with all components of SICAM RTUs. It supports all phases of an RTU or station automation project. Data exchange with DIGSI and PAS UI means a single entry point for data engineering, avoiding multiple manual data inputs for a mixed configuration.

Fig. 6.3-9: SICAM RTU family

With SICAM RTUs, there is always enough performance at hand: The modular multiprocessor concept grows with every enhancement of the system. The distributed architecture and the principle of "evolutionary development" cater for a future-proof system with long lifetime expectation and high security of investment. SICAM RTUs (fig. 6.3-9) carries the experience of more than 30 years of remote control and automation; many references are proving the flexible ways of application.

SICAM AK 3

The SICAM AK 3 scores points not only with its improved mechanical design, but also with significantly simplified hardware components combined with higher performance: A more powerful power supply (optionally in redundant configuration) is as much part of the systematic enhancement as the integration of two network interfaces on the CPU boards (can be extended to up to four interfaces). Additional connection cards and patch plugs are no longer needed.

All existing and proven SICAM AK system concepts and functions, from redundancy to automatic data flow to SICAM Safety, and many more, are still available in the SICAM AK 3 – the third AK generation. Like all products of the SICAM RTUs system family, the SICAM AK 3 can be also parameterized with the SICAM TOOLBOX II object-oriented engineering software.

More security for the system

Automation devices in critical infrastructure applications have to meet stringent and continuously evolving requirements with regard to cyber security. The SICAM AK 3 has been enhanced in this respect, too, and equipped with new security features:

- User identification at the device
- Encrypted end-to-end communication during remote maintenance through SICAM TOOLBOX II (preparation for process communication)
- Security log book to communicate security-relevant events to a central location via Syslog
- Stress test of each firmware release to ensure continued availability in the worst-case scenario of denial of service attacks
- Application layer firewall provided by two physical Ethernet ports for complete decoupling of networks.

SICAM A8000 series

The SICAM A8000 series (fig. 6.3-10) is a new modular device range for telecontrol and automation applications in all areas of energy supply.

This device series was developed to fulfil the requirements of a broad field of applications. The most important features are:

- Suitability for rough ambient conditions thanks to mechanically stable modules and an extended temperature range from -40 to +70 °C
- High voltage strength up to 5kV (IEC 60255) for use directly in substations
- Fulfillment of tomorrow's cyber security requirements with BDEW whitepaper conformity, integrated crypto chip and IPSec encryption
- Integrated communications interfaces incl. GPRS "on board"
- Automation functions (IEC 61131-3), e.g., for controlling a regulated distribution transformer, or for load control
- Space-saving design with a module width of 30mm (without display for CP)
- Scalability by combining individual I/O modules
- Long product lifecycle and high investment security by using standards such as IEC 61850.

The SICAM A8000 series also offers the 3-stage smart functions:

1. **Monitoring:** The first stage focuses on the monitoring of stations to enable rapid fault localization and high availability.
2. **Telecontrol:** The second stage involves switchgear telecontrol in addition to monitoring, thus minimizing downtime. Thanks to this application, fault isolation and power supply restoration of de-energized network sections are no longer difficult tasks for power supply utilities.
3. **Load flow control:** In the third stage, the effects of decentralized power feed-ins are managed via automation. Network losses can be significantly reduced this way.

Benefits

- Platform modularity for versatile application options and reduced inventory
- Extended temperature range of -40°C to +70°C for rough ambient conditions
- Highest EMC stability up to 5 kV (IEC 60255) for direct use in substations
- Integrated short-circuit indicator functionality.for use in cable network monitoring
- Use of international standards such as IEC 61850 for high investment security
- Integrated crypto chip and IPSec encryption to fulfill the high cyber security requirements
- Multitude of interfaces and integrated GPRS module for simple adaptation to existing communication infrastructures
- Integrated web parameterization tool for simple engineering
- Plug-and-play functionality of the modules for time and cost savings.

Fig. 6.3-10: SICAM A8000 series

Applications

Precisely tailored to the application.

Individual tasks and application scenarios require modules that can be freely combined in nearly any way. Thanks to the different performance levels of the processor modules and the universal expansion modules, the SICAM A8000 series is nearly continuously scalable and can be expanded at any time.

Example 1: High performance and many interfaces for complex tasks

- Automation tasks in power distribution and transmission, microgrids
- Control functions in hydroelectric power stations, including the turbines themselves
- Control and communication in railway power supply
- As a communication gateway for various networks and protocols.

Example 2: Everything in view with the compact solution on site

- For use in distribution automation
- Optimized for use in MV switchgear
- Load-flow control available.

Example 3: Space-saving design with no display and a slim CP module

- Grid connection for solar and wind farms
- Control and monitoring of electricity and gas distribution stations
- Simple gateway function.

1
2
3
4
5
6
7
8
9
10
11
12
?

6.3.4 Short-circuit indicators

SICAM FCM (Feeder Condition Monitor)

Is a short-circuit and ground fault indicator with direction indication which uses protection algorithms and low-power sensor technology in accordance with IEC 60044. As an alternative, SICAM FCM (fig. 6.3-11) can also be connected with a capacitance-type voltage tap enabling cost-efficient targeted fault detection in the cable network. SICAM FCM offers the additional option to provide up-to-date measured values via the integrated Modbus RTU interface, ensuring precise evaluation of the distribution network.

Benefits

- Usable in grounded, isolated and compensated networks
- Integrated load flow direction indicator
- Directional short-circuit and ground fault detection
- Cost savings thanks to precise and fast fault localization
- Selective fault information with direction indication used as a basis for "self-healing" applications
- Service restoration times in the range of minutes or seconds (depending on the primary equipment) facilitate minimum loss of network fees / end consumer fees
- Up-to-date measured values for operation management and planning support a targeted use of investment resources in network planning and network expansion
- Direct voltage measurement in the low-voltage network
- Use of low-power sensors and high-quality measurement equipment with a high measuring accuracy
- Alternatively: version for connecting to capacitive voltage detectors
- Flexible ground current measurement down to 0.4 A
- Remote configuration via SICAM A8000 and Modbus
- Self-testing function of communication connection.

SICAM FCM is the first short-circuit indicator which uses sensors in line with the IEC 60044-7 /-8 standard. This enables high-precision measurements without calibration and adjustment to the primary variables.

SICAM FPI (Fault Passage Indicator)

Is a device that is used for phase-fault detection and indication, and for detection of earth faults in radial or open-ring medium-voltage cable networks (fig. 6.3-12).

4 external current sensors detect phase faults (L1, L2, L3) and earth faults (E).The current sensors detect phase-fault and earth-fault currents based on the set current threshold detection, and communicate them to SICAM FPI via an optical signal. The rotary switch on each sensor is used to set the fault-current threshold for phase sensors from 200 A to 1200 A (type 1), 200 A to 800 A (type 2) and for earth sensors from 10 A to 100 A (type 1), 40 A to 300 A (type 2). If the current exceeds the set threshold level, the current sensor will send an input to SICAM FPI via plastic fiber-optic cable. In this condition, the corresponding LEDs are flashing, and the binary contacts are picking up. In normal operating conditions, there is no LED indication.

Fig. 6.3-11: SICAM FCM

Fig. 6.3-12: SICAM FPI

Application area

SICAM FPI is used as a fault detection and indication unit. It is used in the feeder and distribution automation of secondary medium-voltage systems ranging from 10 kV to 36 kV.

1
2
3
4
5
6
7
8
9
10
11
12
?

SICAM FSI (Fault Sensor Indicator)

Utilizing the full range of benefits of distribution automation in overhead line networks requires reliable locating and signaling of earth faults and short circuits in overhead-line networks.

With SICAM FSI (fig. 6.3-13), Siemens now offers a fault detection device for MV overhead line networks.

Application area

It is used in the medium-voltage overhead-line networks from 3.3 kV to 66 kV 50 Hz / 60 Hz.

SICAM FSI is available in 2 versions:

- 6MD2314-1AB10 – without communication:
  The faults are signaled directly at the device by LEDs. Depending on the fault state, a specific flashing light is generated.

- 6MD2314-1AB11 – with communication:
  In addition to local LED display, earth faults and short circuits are transferred to a gateway (SICAM FCG) via a secured radio connection. SICAM FCG (Fault Collector Gateway) establishes the connection to a higher-level control center via GPRS, and sends the messages to the control center using the standardized telecontrol protocol IEC 60870-5-104 or via XMPP.

Benefits

- Higher availability of overhead line networks – reduced downtime
- Quick fault detection – exact fault localization and information to maintenance teams
- High degree of sensitivity, the measurement starts at 50A – reliable detection of high-impedance faults
- Self-sustained sensors reduce the energy consumption of the device – enhancing the service life of the supply battery in the device (battery life: 10 years)
- Own security key and IPsec encryption for data exchange with SICAM FCG – highest protection against unauthorized access (intruders).
- Quick and easy device configuration with QR code on SICAM FSI and a web browser rather than DIP switches – high degree of user-friendly configurability
- Maintenance free design of the device – with the exception of a battery change after 10 years, the SICAM FSI is absolutely maintenance free. The large-size display of the initial commissioning year on the device enables operating personnel to see when the battery is due for changing while remaining on the floor
- Various flashing light frequencies depending on fault type – quick and precise fault diagnosis for the maintenance team.

Fig. 6.3-13: SICAM FSI

SICAM FCG (Fault Collector Gateway)

The device receives both the load current values and distribution line faults via the SICAM Fault Sensor Indicator (FSI). The received information status and events are transmitted to the control center based on the IEC 60870-5-104 protocol or to the Siemens FLiC service using the XMPP protocol. The fault detected by SICAM FSI is communicated to SICAM FCG via short-range radio (SRR) communication within a distance of 100 meters.

SICAM FCG (fig. 6.3-14) provides 6 binary inputs and 3 binary outputs. SICAM FCG can be configured and diagnosed locally using the Web GUI by connecting to a PC or laptop computer or remotely via General Packet Radio Service (GPRS).

The SICAM FCG has a plastic housing and it is strongly recommended to mount it within a metal cabinet for additional protection. The Global System for Mobile Communications (GSM) and short-range radio antenna are mounted outside the metallic cabinet. SICAM FSI firmware and parameters can be updated from the SICAM FCG.

SICAM FCG Web GUI allows the system operator to configure the parameters, display error and event log, upgrade of firmware, and download the configuration.

Binary Interfaces

On the terminal block L, all the 3 binary inputs are independent and have a fixed threshold of 8 V. On the terminal block P, 2 binary inputs have a common root (P8, P9, and P10), 1 binary input (P11, P12) is independent. These binary inputs have selectable thresholds of DC 19 V, DC 88 V, or DC 176 V. Therefore an optimal adjustment to the pickup voltage can be made in the case of increased interference level. The binary outputs are designed as relay contacts. The terminal block P has 2 relay outputs Normally open (NO) and one relay output change over (CO). The relays can switch voltages up to AC/DC 250 V and currents up to AC/DC 5 A.

Communication

SICAM FCG is a gateway device on the communication network between the SICAM FSIs and the control center. It provides interfaces and supports communication protocols to the SICAM FSIs (via short-range radio) and to the control center (via mobile networks). The gateway contains an interworking function for the communication exchanged between SICAM FSIs and the control center. The various device communication interfaces and protocols are available for the communication between the SICAM FCG and the control center. SICAM FCG has an Ethernet interface which supports the device parameterization and the monitoring. The communication interface supports the device parameterization and the transmission of messages and measured values. The information is transmitted in telegrams in a secured way.

Fig. 6.3-14: SICAM FCG

GMS Module

The module supports 4 frequency bands: 850 MHz, 900 MHz, 1800 MHz, and 1900 MHz. The communication to the control center can be executed based on the IEC 60870-5-104 via internet protocol security (IPSec) tunnel and GSM. You can execute the configuration and local diagnostic remotely via GSM. The communication to the Siemens FLiC service is based on XMPP and GSM.

Short-Range Radio Module

The short-range radio module communicates directly with SICAM FSI via a radio link in the license-free 2400-MHz band and up to 100 m. Any overhead distribution line fault or other status change detected by SICAM FSI is communicated to the SICAM FCG through the short-range radio module.

Time Synchronization

In operation, the device needs the date and time for all time-relevant processes. This ensures a uniform time basis and a time stamp for the communication with peripheral devices. The following types of time synchronization are performed according to the parameterization:

- External time synchronization via Network Time Protocol (NTP) (recommended, see 7.3.1 time synchronization).
- Internal time synchronization via Real-Time Clock (RTC) (if there is no external time synchronization).

For further information:
siemens.com/sicam

6.4 Power quality and measurements

Power quality

Supply quality

Quality is generally recognized as an important aspect of any electricity supply service. Customers care about high quality just as much as low prices. Price and quality are complementary. Together, they define the value that customers derive from the electrical supply service (fig. 6.4-1).

The quality of the electricity supply provided to final customers results from a range of quality factors, for which different sectors of the electricity industry are responsible. Quality of service in the electrical supply has a number of different dimensions, which can be grouped under three general headings: commercial relationships between a supplier and a user, continuity of supply, and voltage quality.

To avoid the high cost of equipment failures, all customers must make sure that they obtain an electricity supply of satisfactory quality, and that their electrical equipment is capable of functioning as required even when small disturbances occur. In practice, the voltage can never be perfect.

Electrical supply is one of the most essential basic services supporting an industrial society. Electricity consumers require this basic service:

- To be available all the time (i.e., a high level of reliability)
- To enable all consumers' electrical equipment to work safely and satisfactorily (i.e., a high level of power quality).

Voltage quality

Voltage quality, also termed power quality (PQ), covers a variety of characteristics in a power system. Chief among these is the quality of the voltage waveform. There are several technical standards defining voltage quality criteria, but ultimately quality is determined by the ability of customers' equipment to perform properly. The relevant technical phenomena are: variations in frequency, fluctuations in voltage magnitude, short-duration voltage variations (dips, swells, and short interruptions), long-duration voltage variations (overvoltages or undervoltages), transients (temporarily transient overvoltages), waveform distortion, etc. In many countries, voltage quality is regulated to some extent, often using industry-wide accepted standards or practices to provide indicative levels of performance.

Everybody is now aware of the effects of poor power quality, but few really have it under control. The levels of power quality disturbances need to be monitored weekly, sometimes even daily, in order to trigger appropriate remedial measures before severe consequences occur.

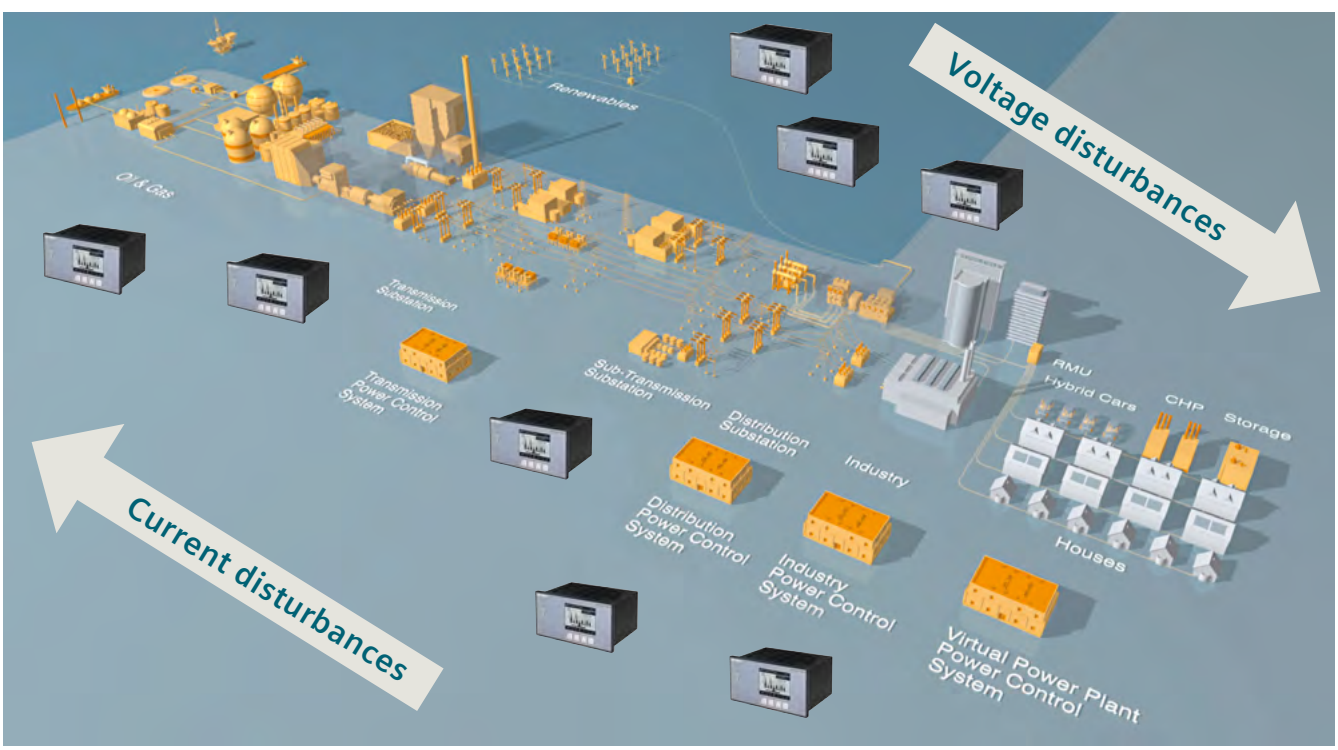

Fig. 6.4-1: Power quality monitoring provides value to everyone – to the local utility, to the consumer, to the local economy, and to the environment

The power utility therefore has an interest in monitoring the power quality, showing that it is acting correctly, and improving its know-how about the system. This ensures customer satisfaction by providing electricity with quality and reliability.

The availability and quality of power is of even greater concern to distribution companies. The liberalization of the electricity market has put them in the uncomfortable position of being affected by other players' actions. This situation has been stabilizing, and power quality is becoming a top priority issue in the restructuring process. With increasing customer awareness of energy efficiency, it is clear that the quality of supply will be receiving much attention.

Most power quality problems directly concern the end user, or are experienced at this level (also see main problems table 6.4-1, next page). End users have to measure the power quality and invest in local mitigation facilities. However, consumers often turn to the utility company, instead, and exert pressure to obtain the required supply quality.

The EN 50160 power quality standard describes the main characteristics of the voltage at the customer's supply terminals in public low-, medium-, and, in the near future, high-voltage systems, under normal operating conditions.

Who is responsible?

An interesting problem arises when the market fails to offer products that meet the customer's power quality needs. If a customer cannot find equipment that is designed to tolerate momentary power interruptions, the customer may, for example, pressure the power supplier and the regulator to increase the power quality of the overall distribution system. It may be in the supplier's interest to help the customer address the power quality and reliability problem locally.

The electrical supply system can be considered a sort of open-access resource: In practice, almost everybody is connected to it and can "freely" feed into it. This freedom is now limited by standards, and/or agreements. In European countries, the EN 50160 European Standard is generally used as a basis for the supply quality, often also termed the voltage or power quality. There is currently no standard for the current quality at the point of common coupling (PCC), but only for equipment. The interaction between the voltage and current makes it hard to draw a line between the customer as "receiving" and the network company as "supplying" a certain level of power quality. The voltage quality (for which the network is often considered responsible) and the current quality (for which the customer is often considered responsible) affect each other in mutual interaction (fig. 6.4-2).

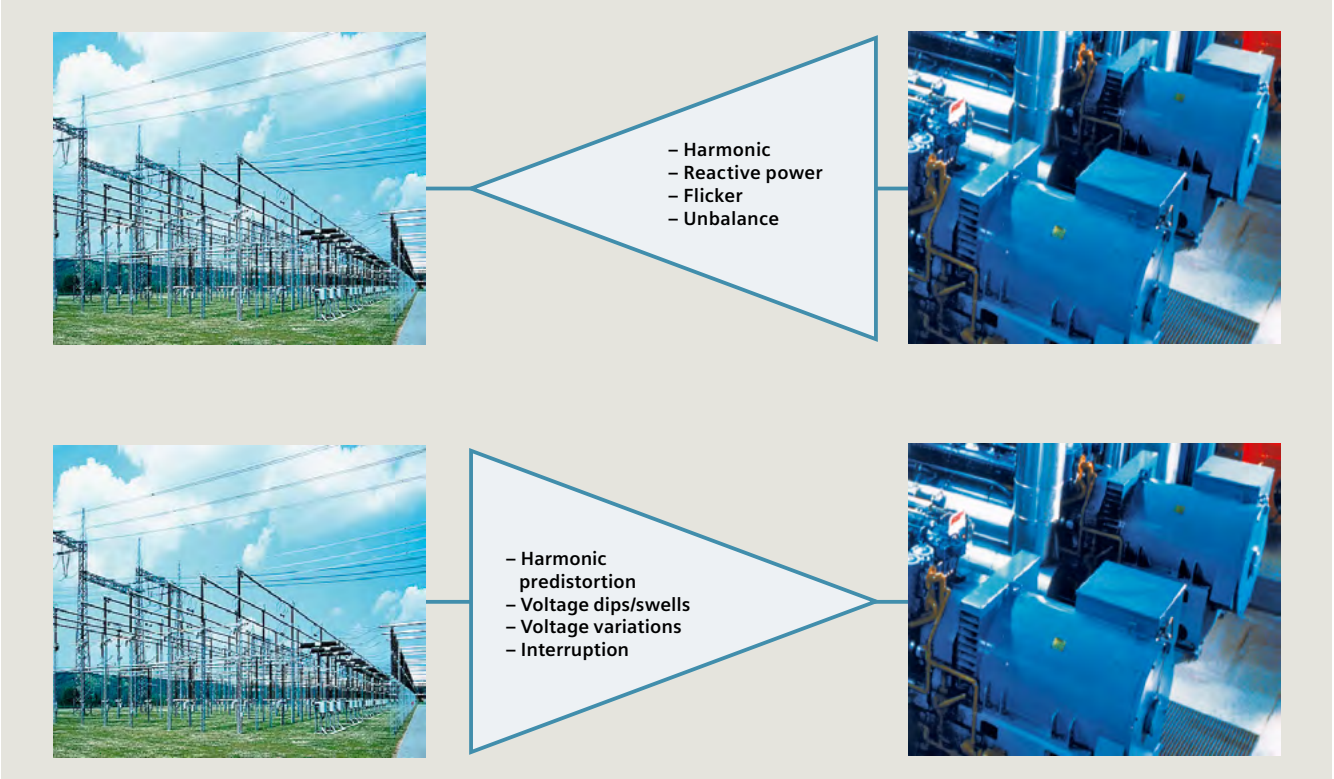

Fig. 6.4-2: Utility and industries, both are responsible for voltage quality

1
2
3
4
5
6
7
8
9
10
11
12
?

Problem	Description	Cause	Effect
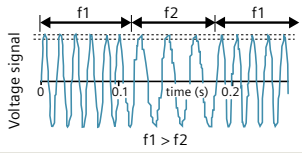	**Frequency distortions:** A frequency variation involves variation in frequency above or below the normally stable utility frequency of 50 or 60 Hz	• Start-up or shutdown of very large item of consumer equipment, e.g., motor • Loading and unloading of generator or small co-generation sites • Unstable frequency power sources	• Misoperation, data loss, system crashes, and damage to equipment and motor • For certain kinds of motor load, such as in textile mills, tight control of frequency is essential
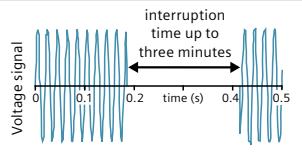	**Supply interruption:** Planned or accidental total loss of power in a specific area. Momentary interruptions lasting from a half second to 3 seconds. Temporary interruptions lasting from 3 seconds to 1 minute. Long-term interruptions lasting longer than 1 minute.	• Switching operations attempting to isolate an electrical problem and maintain power to the customer's area • Accidents, acts of nature, etc. • Fuses, actions by a protection function, e.g., automatic recloser cycle	• Sensible processes and system shutdown or damages • Loss of computer / controller memory • Production losses or damage
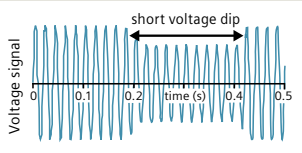	**Voltage dip / sag or swell:** Any short-term (half cycle to 3 seconds) decrease (sag) or increase (swell) in voltage	• Start-up or shutdown of very large item of consumer equipment, e.g., motor • Short circuits (faults) • Underdimensioned electrical circuit • Utility equipment failure or utility switching	• Memory loss, data errors, dim or bright lights, shrinking display screens, equipment shutdown • Motors stalling or stopping and decreased motor life
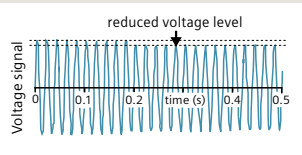	**Supply voltage variations:** Variation in the voltage level above or below the nominal voltage under normal operating conditions	• The line voltage amplitude may change due to normal changing load situations	• Equipment shutdown by tripping due to undervoltage or even overheating and/or damage to equipment due to overvoltage • Reduced efficiency or life of electrical equipment
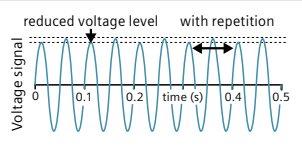	**Flicker:** Impression of unsteadiness of visual sensation induced by a light stimulus, the luminance or spectral distribution of which fluctuates with time	• Intermittent loads • Motor starting • Arc furnaces • Welding plants	• Changes in the luminance of lamps can result in the visual phenomenon called flicker on people, disturbing concentration, causing headaches, etc.
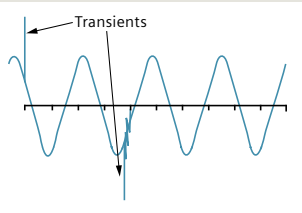	**Transient:** A transient is a sudden change in voltage up to several thousand volts. It may be of the impulsive or oscillatory type (also termed impulse, surge, or spike) **Notch:** This is a disturbance of opposite polarity from the waveform	• Utility switching operations, starting and stopping heavy equipment, elevators, welding equipment static discharges, and lightning	• Processing errors • Data loss • Lock-up of sensitive equipment • Burned circuit boards
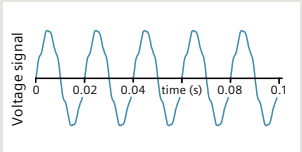	**Noise:** This is an unwanted electrical signal of high frequency from other equipment **Harmonic:** Distortion is alteration of the pure sine wave due to non-linear loads on the power supply	• Noise is caused by electromagnetic interference from appliances, e.g., microwave, radio and TV broadcasts, arc welding, heaters, laser printers, thermostats, loose wiring, or improper grounding • Harmonic distortion is caused by non-linear loads	• Noise interferes with sensitive electronic equipment • It can cause processing errors and data loss • Harmonic distortion causes motors, transformers, and wiring to overheat • Improper operation of breakers, relays, or fuses

Table 6.4-1: Main problems with power quality

1
2
3
4
5
6
7
8
9
10
11
12
?

Power quality monitoring applications
One of the keys to the success of profiling and defining the power quality system is understanding the applications. The following table 6.4-2 suggests two applications based on gathering power quality data.

Regulatory application for continuous analysis and explanatory application for detailed data for event evaluation proposals.

PQ application	Description	Hardware	Measurements	
Regulatory power quality:	Regulative PQ analysis approaches the comparison of the quality of voltage or power with recognized standards (e.g., EN 50160) or with the quality defined in power supply contracts. Periodically produce compliance reports.	Power Quality Recorders (mainly Class A)	Voltage quality parameters (at least) at selected system interfaces and customer supply points (e.g., EN 50160) for: Power system performance Planning levels (i.e., internal objectives) Specific customer contracts	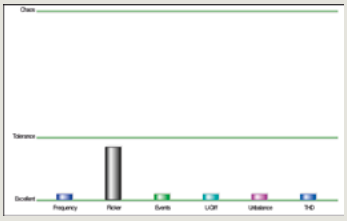
Explanatory power quality:	Explanatory PQ analysis to provide an understanding of what is going on in particular cases, such as fault analysis, to support the wider aspects of system stability. It is a process that aims to document selected, observed power quality and maximize the level of understanding, possibly including knowledge of the cause and consequences and possible mitigation of power quality problems.	PQ recorders Class A, S and fault recorder / PMU	V+I_{rms}, waveforms, status of binaries, power swing, MV transformers, busbars and loads	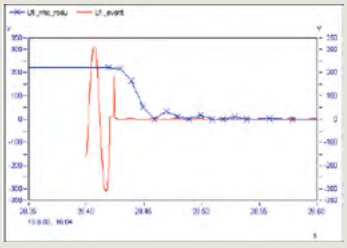

Table 6.4-2: Power quality applications

Power quality recording steps

Project phases	Defining PQ objectives	System installation and configuration	Start measuring	Evaluation	System improvement and/or counter-measures
Planning activities	Define PQ measurement objectives (regulative, explanatory, or both) and define the targets	Define measuring points and install devices and systems	Automatic notification or systemic system check-up for events or standards violations	Power quality compliance Reporting and/or event evaluation	Analysis of information, controlling, action plan, adaptation to standards, comparison with defined targets
Support		Easy configuration with SICAM Q100 Manager	Reliable measurement of defined quantities	Remote access for automatic evaluation	Automatic report generator in case of limit valutation

Fig. 6.4-3: Power quality recording in five steps

1
2
3
4
5
6
7
8
9
10
11
12
?

Standards

The purpose of power quality indexes and measurement objectives is to characterize power system disturbance levels. Such indexes may be defined as "voltage characteristics" and may be stipulated in a Grid Code that applies to electrical system interfaces. Power quality Grid Codes make use of existing standards or guidelines defining voltage and current indexes to be applied to interfaces in low-, medium-, or high-voltage systems, for example, EN 50160 (fig 6.4-4). This standard defines and describes the main characteristics of the voltage at the system operator´s supply terminals in public LV and MV power distribution systems (table 6.4-3 to table 6.4-4). Indexes for HV-EHV will also be described in the new edition of EN 50160. Since electrical systems among regions and countries are different, there are also many other regional or national recommendations, mainly described in Grid Codes, defining specific or adapted limit values.

These local standards are normally the result of practical voltage quality measurement campaigns or the system experience, which are mostly acquired through a permanent and deep electrical system behavior know-how. Measuring according to EN 50160 is, however, only part of the power quality measurement process. Another important standard for power quality measurement is IEC 61000-4-30, which defines the measurement methodology, see fig 6.4-5.

Parameter	Supply voltage characteristics according to EN 50160
Power frequency	LV, MV: mean value of fundamental measured over 10 s ± 1 % (49.5 – 50.5 Hz) for 99.5 % of week – 6 % / + 4 % (47 – 52 Hz) for 100 % of week
Voltage magnitude variations	LV, MV: ± 10 % for 95 % of week, mean 10 minutes r.m.s. values (fig. 6.4-5)
Rapid voltage changes	LV: 5 % normal 10 % infrequently $P_{lt} \leq 1$ for 95 % of week MV: 4 % normal 6 % infrequently $P_{lt} \leq 1$ for 95 % of week
Supply voltage dips	Majority: duration < 1 s, depth < 60 %. Locally limited dips caused by load switching on LV: 10 – 50 %, MV: 10 – 15 %
Short interruptions of supply voltage	LV, MV: (up to 3 minutes) few tens – few hundreds / year duration 70 % of them < 1 s
Long interruption of supply voltage	LV, MV: (longer than 3 minutes) < 10 – 50 / year
Temporary, power frequency overvoltages	LV: < 1.5 kV r.m.s. MV: 1.7 V_c (solid or impedance earth) 2.0 V_c (unearthed or resonant earth)
Transient overvoltages	LV: generally < 6 kV, occasionally higher; rise time: µs to ms MV: not defined
Supply voltage unbalance	LV, MV: up to 2 % for 95 % of week, mean 10 minutes r.m.s. values, up to 3 % in some locations
Harmonic voltage / THD	Harmonics LV, MV THD: 8
Interharmonic voltage	LV, MV: under consideration

Table 6.4-3: Requirements according to EN 50160

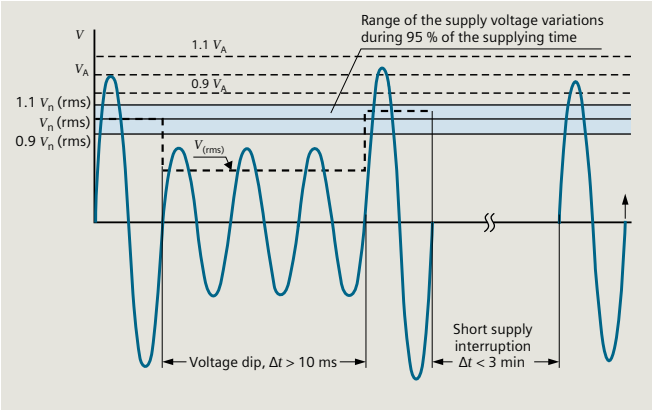

Fig. 6.4-4: Illustration of a voltage dip and a short supply interruption, classified according to EN 50160; V_N – nominal voltage of the supply system (r.m.s.), V_A – amplitude of the supply voltage, $V_{(r.m.s.)}$ – the actual r.m.s. value of the supply voltage

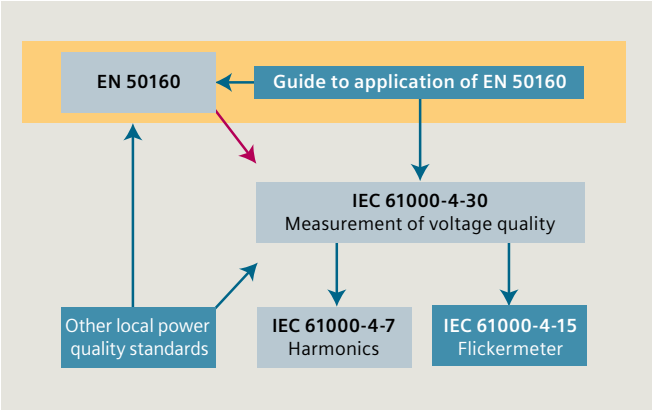

Fig. 6.4-5: Overview of international and national standards for power quality

Odd harmonics				Even harmonics	
Not multiples of 3		Multiples of 3			
Order h	Relative voltage (%)	Order h	Relative voltage (%)	Order h	Relative voltage (%)
5	6	3	5	2	2
7	5	9	1.5	4	1
11	3.5	15	0.5	6 ... 24	0.5
13	3	21	0.5		
17	2				
19	1.5				
23	1.5				
25	1.5				

Table 6.4-4: Values of individual harmonic voltages at the supply terminals for orders up to 25, given in percent of V_N

From IEC 61000-4-30 also accuracy classes, Class A "higher accuracy" and Class S "lower accuracy" are derived. In other words, in a simple way, if the EN 50160 defines "what" to measure, the IEC 61000-4-30 defines "how" to measure it. The end result of a measurement process is expected to be fully automated, standard compliant documentation of all measurements.

Calculation of r.m.s. values after every half period is the touchstone of an IEC 61000-4-30 Class A measurement device. To define the range of normal voltage states, a hysteresis range is specified for event detection.

IEC 61000-4-30:
Power Quality Measurement Methods: This standard defines the methods for measurement and interpretation of results for power quality parameters in AC supply systems.

IEC 61000-4-15:
Flickermeter, Functional and Design Specifications: This section of IEC 61000 provides a functional and design specification for flicker measuring apparatus intended to indicate the correct flicker perception level for all practical voltage fluctuation waveforms.

IEC 61000-4-7:
General Guide on Harmonics and Interharmonics: This is a general guide on harmonics and interharmonics measurements and instrumentation, for power supply systems and equipment connected thereto.

Definition of a measuring point and power quality measurement objectives

Power quality measurements address the aspect of power performance by describing the quality of every individual interface in an electrical system and in the networks of its various customers. Identifying, defining, profiling the power quality measurement points are essential tasks in defining a power quality project. However, the electrical system is dynamic by nature, so optimizing the measuring points is a routine that is developed by day-to-day learning. This may not help predict changes, but will permit a more effective response to them (fig. 6.4-6).

Identification of measuring points

Measurement points may be located and defined as shown in table 6.4-5.

Measuring power quality requires not only an effective choice of measuring points, but also defined objectives for the PQ analysis at the measuring points.

Siemens generally classify "power quality" monitoring as a mixture of data gathering technologies classified by their purpose or application.

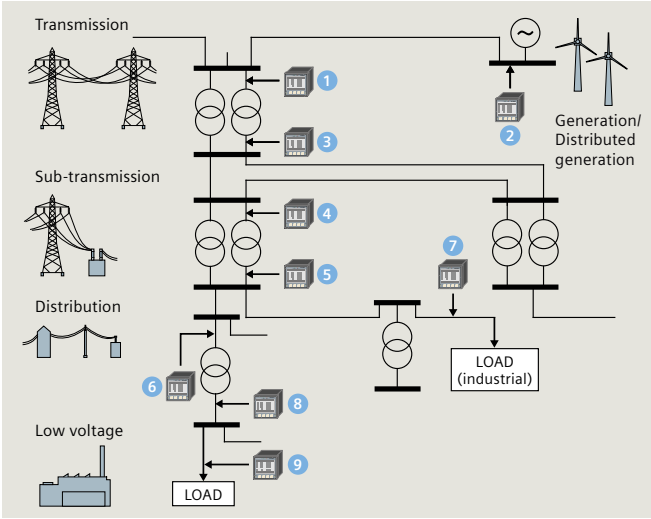

Fig. 6.4-6: General system online diagram

No.	Measurement points	Location
1	Transmission feeder (line or transformer)	Possibly busbar
2	Generation station / distributed generation	Busbar, transformer or generator connection
3	Sub-transmission, line supply	Busbar (e.g., where the busbar is owned and operated by the transmission company)
4	Sub-transmission feeder (line or transformer)	Remote line terminals (e.g., where the lines are owned and operated by the transmission company)
5	Distribution, line supply	Transformer secondary side or cable to neighbor's substation
6	Distribution feeder (line or transformer)	Step-down transformers
7	Distribution load	Step-down transformers, (e.g., where the transformers are owned by the distribution company)
8	LV supply	Transformer of the distribution company
9	LV load	Load or transformer at the customer (industries, oil and gas companies, data centers, hospitals, commercial buildings, etc.)

Table 6.4-5: Measurement points and system location

6.4.1 Power meter

SICAM P50/55

Is a power meter (fig. 6.4-7) for panel mounting with graphic display and background illumination, or for standard rail mounting, used for acquiring and/or displaying measured values in electrical power supply systems. More than 100 values can be measured, including r.m.s. values of voltages (phase-to-phase and/or phase-to-ground), currents, active, reactive and apparent power and energy, power factor, phase angle, harmonics of currents and voltages, total harmonic distortion per phase plus frequency and symmetry factor, energy output, as well as external signals and states.

Main features of SICAM P50/55:

- Switch panel mounting with display of the device SICAM P: dimensions 96 mm x 96 mm/3.78 in. x 3.78 in
- DIN rail mounting without display of the device SICAM P55
- Expandable with additional module for analog input or analog output
- 2 freely programmable binary outputs: e.g., energy counters, limit violations, or status signals
- Trigger function for settable limits programmed for sampled or r.m.s. values
- Generating lists of minimum, average and maximum values for currents, voltages, power, energy, etc.
- Independent settings for currents, voltages, active and reactive power, power factor, etc.
- Up to 6 alarm groups can be defined using AND/OR for logical combinations
- Alarms can be used to increase counter values, to trigger the oscilloscope function, or to generate binary output pulses.

Function overview

- Measurement of voltage, current, active and reactive power, frequency, active and reactive energy, power factor, symmetry factor, voltage and current harmonics up to the 21st, total harmonic distortion
- Single-phase, three-phase balanced or unbalanced connection, four-wire connection
- Communications: Profibus DP, Modbus RTU/ASCII or IEC 60870-5-103 communication protocol
- Simple parameterization via front key or RS485 communication port using SICAM P Manager software
- Graphic display with background illumination with up to 20 programmable screens
- Real-time clock: Measured values and states will be recorded with time stamps
- 1 MB memory management: The allocation of the non-volatile measurement memory is programmable
- Recording and display of limit value violations and log entries
- Battery: Recordings like limit value violations or energy counter values stay safely in the memory up to 3 months in case of a blackout.

Fig. 6.4-7: Power meter – SICAM P

Application areas

Power monitoring systems with SICAM P, a permanently installed system, enables continuous logging of energy-related data and provides information on operational characteristics of electrical systems. SICAM P helps identify sources of energy consumption and time of peak consumption.

This knowledge allows to allocate and reduce energy costs. The major application area is power monitoring and recording at MV and LV level. The major information types are measured values, alarms, and status information.

The input modules work with external signals with a measurement range of DC 0 – 20 mA. Mean values of all external analog channels as well as states of digital channels can be recorded and saved into the memory. All recorded quantities and binary state information can be "read out" and evaluated with the configuration software SICAM P Manager. Output modules can be used for conversion of any electrical quantity (current, voltage, etc.) into a DC 0 – 20/4 – 20 mA output signal, generation of impulses for metering, indication of limit value violations, as well as for switching operations.

Application examples (fig. 6.4-8)

SICAM P as a panel-mounted device for direct electrical power monitoring: With a very simple configuration, the display of measured values is adaptable to the specific requirements of the user.

SICAM P as a panel-mounted or snap-on mounted device for use on a process bus: Network linking is possible with the integrated RS485 port with the standard Profibus DP and Modbus RTU / ASCII communication protocol. Furthermore, it is also possible to integrate SICAM P50 into communication networks with IEC 60870-5-103 as standard protocol. That allows several SICAM P measured parameters to be indicated, evaluated and processed at a central master station. The major application area is the integration into PLC systems as a transducer.

SICAM P can be ordered for snap-on mounting on a 35 mm / 1.38 in. DIN rail. For carrying out the setting of the device, the configuration software is necessary.

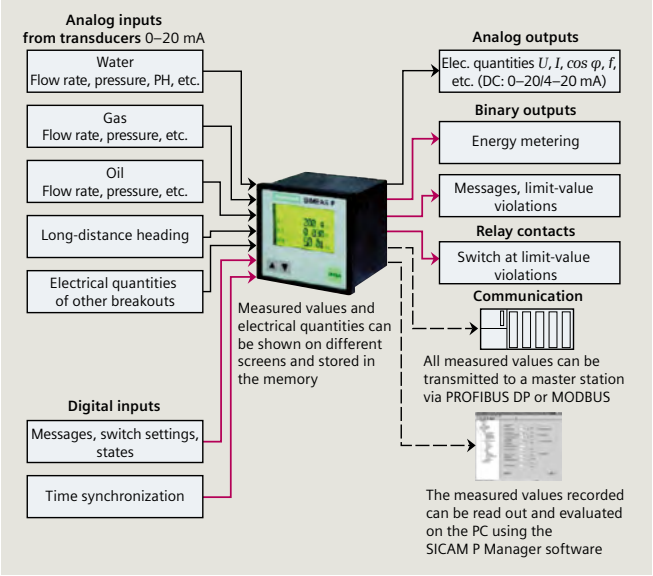

Fig. 6.4-8: SICAM P50 sample applications

SICAM P850

The SICAM P850 multifunctional device (fig. 6.4-9) is used to collect, display and transmit measured electrical variables such as AC current, AC voltage, power types, harmonics, etc. The communications interfaces can be used to output the measurands to a PC and the control center, or to show them on a display.

In addition to the monitoring function, the SICAM P850 is an all-in-one device with internal 2GB memory with new recorder functionalities.

- Waveform capture and recording with voltage and current trigger settings im COMTRADE
- Recording of average, min and max values in flexible intervals of different network parameters in CSV
- Flexible data export in CSV and/or COMTRADE formats.

Fig. 6.4-9: SICAM P850

Applications

The SICAM P850 device is used in single-phase systems, threephase systems, and four-phase systems (with neutral conductors). It is used primarily in power utilities, but also in other industrial and commercial applications. The web server integrated into the device is used to configure the parameters, and output measured values via HTML pages on a connected PC / laptop (fig. 6.4-10). In devices with displays, the parameters can also be configured with the function keys on the front of the device, and the measured values can be output to the display. The output variables can also be transmitted to control or other systems such as SICAM PQS V8.01 via the communications interfaces (Ethernet, e.g., IEC 61850) in the form of digital data.

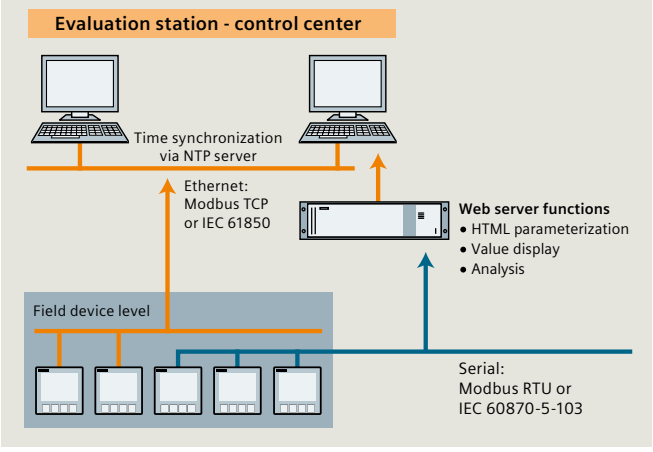

Fig. 6.4-10: Sample application SICAM P850

Main features

- Use in the IT, TT and TN power systems
- Robust and compact design according to IEC 62586-1, Class S (leading standard)
- The measurands and events are detected according to the power quality standard IEC 61000-4-30
- Ethernet communication via the Modbus TCP or IEC 61850
- Edition 2 protocol; serial communication via Modbus RTU and IEC 60870-5-103 via the RS485 interface is optional
- External time synchronization via the Network Time Protocol (NTP).

1
2
3
4
5
6
7
8
9
10
11
12
?

SICAM MMU

SICAM MMU (Measurement and Monitoring Unit) is a power monitoring device (fig. 6.4-11) that allows the measuring of electrical quantities in electrical networks in a single unit.

In industries, power plants and substations, the SICAM MMU is applied to measure and calculate parameters, e.g., current, voltage, power, phase angle, harmonics and unbalance, energy or frequency, and assign them – for further processing and visualization – to control centers (SCADA, DMS, EMS, etc.) through IEC 60870-5-104 protocol, or to automation systems through Modbus TCP protocol.

Application areas (fig. 6.4-12)

- Supporting the integration of online measurement into control center and substation automation, protection via protocols IEC 60870-5-104 or Modbus TCP, e.g., for voltage and load levels control
- Monitoring of transformers and decentralized power generation
- Alarming and notification of limit violations via protocol or binary outputs
- Basic power quality profile monitoring (voltage, frequency harmonics, and unbalance)
- Option for supporting all power systems IT, TT and TN.

Fig. 6.4-11: SICAM MMU

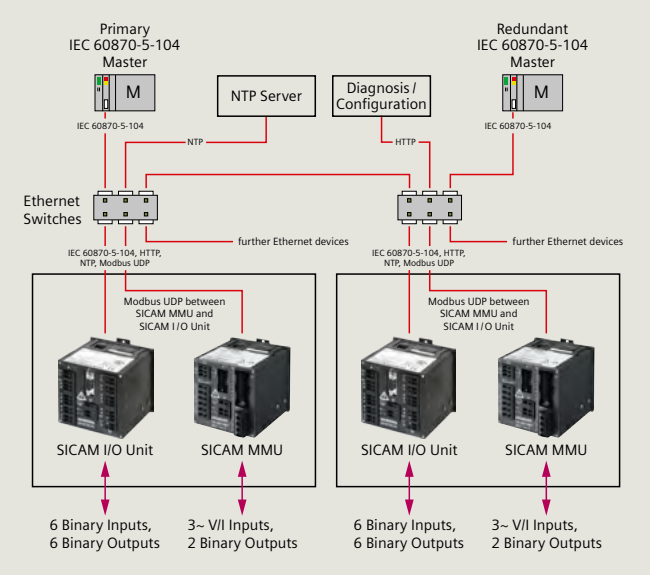

Fig. 6.4-12: Application example MMU

6.4.2 SICAM T – electrical measurement transducer

SICAM T

Is a digital measurement transducer (fig. 6.4-13) that allows the measuring of electrical quantities in electrical networks in a single unit. In industries, power plants and substations, transducers are especially used for measurand (e.g., current, voltage, power, phase angle, energy, or frequency) assignment into further processing through analog outputs or communication interface for precise control, notification or visualization tasks.

Applications

- Conversion and integration of measurands into substation automation, protection or SCADA process via RTU and/or via protocols IEC 61850 (for KG9662 variant), MODBUS TCP, IEC 60870-5-103 for further control and/or monitoring tasks (fig. 6.4-14).
- Monitoring of lower voltage levels and heavy load control, e.g., air conditioning and motors.
- Depending on the device type, the input circuits for voltage measurement are either designed as voltage dividers or they are galvanically isolated. Devices with galvanic isolation can be used without voltage transformers in the power systems IT, TT and TN. Devices with a voltage divider can also be used in these power systems; for IT power systems, however, an upstream voltage transformer is required.

Application example

SICAM T applications: Local monitoring or control purposes through assignment of up to 60 available electrical parameters to analog outputs, notifications through binary outputs, or integration into SCADA / monitoring systems through communication interface, e.g., serial or Ethernet (fig. 6.4-15).

Fig. 6.4-13: SICAM T electrical measurement transducer

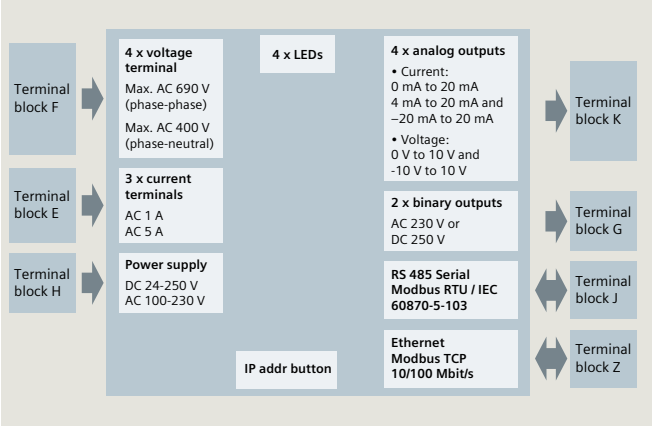

Fig. 6.4-14: Block diagram SICAM T 7KG9661

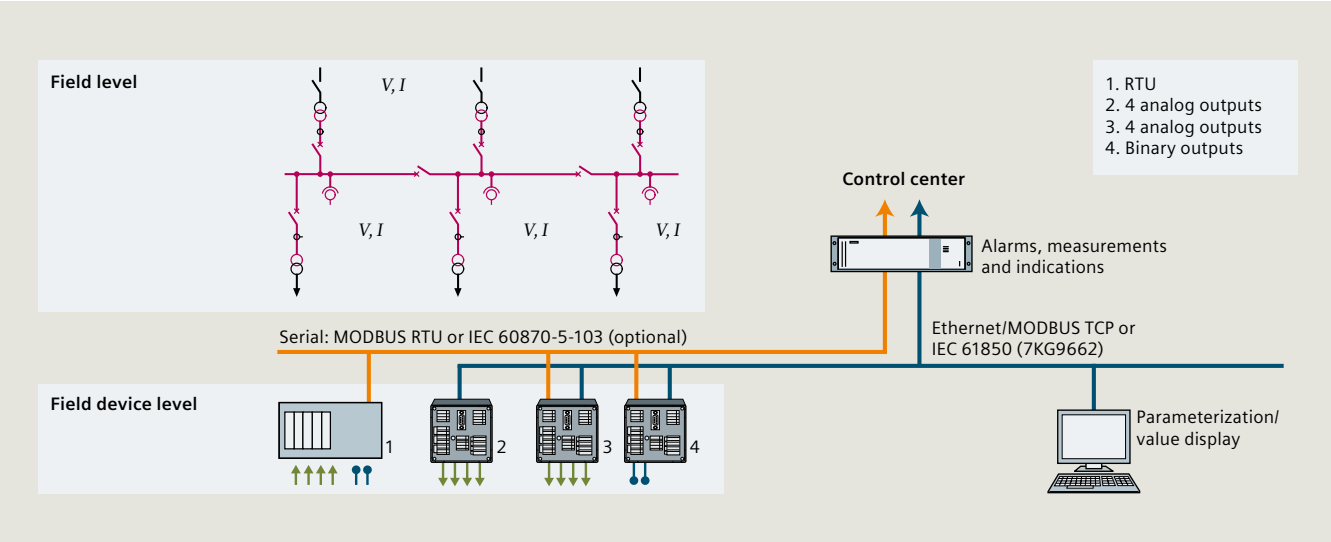

Fig. 6.4-15: SICAM T applications

1
2
3
4
5
6
7
8
9
10
11
12
?

6.4.3 Power quality and monitoring

SICAM Q200

Is a power supply system analyzer (fig. 6.4-16) with power quality and energy management functions. This device supports continuous acquisition and analysis of all rele-vant parameters. These results support energy users to identify and implement quality programs which reduce unplanned downtime, extend equipment lifetime, and improve operating conditions.

Device Description

Used as a multifunctional measuring device, SICAM Q200 acquires, visualizes, evaluates and transmits measured electrical characteristics such as alternating voltage and current, frequency, power, harmonics among a few. The acquisition, processing and accuracy of measured variables and events meet IEC 61000-4-30 Class A power quality measurement standards. The measured variables can be provided to a power automation/SCADA system via communication interfaces or shown on a display. In addition to its monitoring functions, the SICAM Q200 provides a combined recording and evaluating function directly in its web server. Recorded data can be sent over IEC61850 to SICAM PQS and PQ Analyzer (V8.08 or higher) that evaluate and generate flexible reports (as EN50160) automatically.

Application

SICAM Q200 is a PQI Class A acc. IEC 62586-1/2 and IEC 61000-4-30 Ed. 3 beyond Class A device used in single-phase, as well as, in three-wire and four-wire systems (with neutral conductor). Use this device wherever comprehensive measurement of supply quality is necessary – at power utilities, industrial and data centers, and trade sectors.

Customer Benefits

- Comprehensive acquisition of relevant network parameters allows for the early identification of supply quality problems and mitigating unplanned issues.
- Manufacturer independent, comparable, measured values obtained using the IEC 61000-4-30 Class A Ed.3 standard measurement methods
- PQ reporting according to EN 50160 and other grid codes direct in Web-Browser
- Easy operation via integrated web server for parameterization, diagnosis, evaluation and reporting reduces costs related to commissioning and training
- Interoperability is guaranteed by using standard interfaces and standard protocols (IEC 61850, MODBUS TCP) and data formats (PQDIF, COMTRADE and CSV).

Fig. 6.4-16: SICAM Q200 – multifunctional recorder

POWEREN.IR

1
2
3
4
5
6
7
8
9
10
11
12
?

SICAM Q100

Is a Class A multifunctional measuring device (fig. 6.4-17) for monitoring power quality according to the IEC 62586-1 (PQI-A-FI) product standard. It is used to acquire, visualize, analyze and transmit measured electrical variables such as AC current, AC voltage, frequency, power, harmonics, etc.

The acquisition, processing and accuracy of measured variables and events are performed according to the IEC 61000-4-30 Class A power quality measurement standard. Long-term data and events are evaluated directly in the device and displayed as a report in accordance with power quality standards (such as EN 50160).

The measured variables can be output to a PC or control center via one of the communication interfaces, or shown on a display. In addition to acquiring the power supply quality according to Class A, SICAM Q100 also offers energy management functions such as the acquisition of load profiles and the relationship to different tariffs, as well as the Modbus Master function for connecting RS485 submeters (for example, PAC) and LV circuit-breakers (such as 3WL).

Application

SICAM Q100 is used in single-phase systems as well as in three-wire and four-wire systems (with neutral conductors). This universal device is most valuable for applications where the uninterrupted acquisition of supply quality data (e.g., EN 50160) must guarantee fault-free operation of the loads/consumers connected to the power supply system. In addition to acquiring supply quality data, the unit can also be used for the comprehensive acquisition of other measured electrical variables that are required by the particular application: as part of an automation solution in industrial plants, for energy management and building automation, in commercial applications (assignment of cost centers), and for the comprehensive monitoring of important points in a power company's network.

With its master function, SICAM Q100 makes it possible to integrate and further process data from peripheral devices (for example, a power meter or LV circuit-breaker). Whether the need is for comprehensive supply quality monitoring and logging or for energy management functions (for example, to reduce operating costs): SICAM Q100 is a key component in any power monitoring system.

Voltage quality – application overview

Voltage quality (also known as power quality) refers to various characteristics in a power supply system. Voltage quality criteria are defined by a number of technical regulations, such as the EN 50160 power quality standard. These criteria describe the main characteristics of voltage at customers' power supply terminals in public low-, medium-, and high-voltage systems. Ultimately, however, quality is determined by the ability of customer systems to correctly perform their tasks.

Fig. 6.4-17: SICAM Q100 – multifunctional measuring device

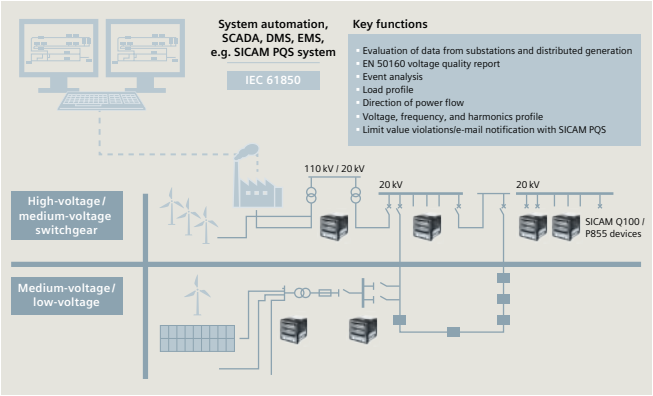

Fig. 6.4-18: Application – Voltage quality on all voltage levels of the power supply system

Most quality problems affect the ultimate consumer directly, or are perceived at this level. Today, production plants such as those in the paper and chemical industries are extraordinarily sensitive due to the wide use of microprocessor-supported controlling systems, information processing devices, and power electronics devices. Temporary interruptions of supply and undervoltages can already result in high costs due to, for example, damage to workpieces or tools, plant restarts, etc.

Data centers and "provider houses," the number of which is growing, are also concerned about their plants' security of supply because voltage disturbances in these types of enterprises and operating areas can have serious consequences. Voltage measurements and evaluations can be used to determine voltage quality.

As consumers' awareness of energy efficiency grows, quality of supply becomes a major focus. So it is also in the interest of power utilities to monitor power quality, thus ensuring proper and efficient operation and improving the system. A high-quality, reliable power supply also means high customer satisfaction (fig. 6.4-18).

SICAM P855

The SICAM P855 multifunctional device (fig. 6.4-19) is used to collect, display and transmit measured electrical variables such as AC current, AC voltage, power types, harmonics, etc. The measurands and events are collected and processed according to the power quality standard IEC 61000-4-30. The communications interfaces can be used to output the measurands to a PC and the control center or display them on a display.

In addition to the monitoring function, the SICAM P855 all-in-one device also provides a combined recording and evaluation function. It can record measurands at programmable time intervals, using a wide range of recorders, such as power quality and fault recorders. Long-term data and events are evaluated directly in the device according to the power quality standards (such as EN 50160) and output as reports.

Fig. 6.4-19: SICAM P855 – multifunctional device

Applications

SICAM P855 device is used in single-phase systems, three-phase systems and four-phase systems (with neutral conductors). They are used primarily in power utilities, but also in other industrial and commercial applications.

The web server integrated into the device is used to configure the parameters and output measured values via HTML pages on a connected PC / laptop. In devices with displays, the parameters can also be configured with the function keys on the front of the device, and the measured values can be output to the display. The output variables can also be transmitted to control or other systems such as SICAM PQS V8.01 (planned) via the communications interfaces (Ethernet, e.g., IEC 61850) in the form of digital data.

Features

- Robust and compact design according to IEC 62586-1, Class S (leading standard)
- Use of SICAM P850 / P855 in the IT, TT and TN power systems
- Ethernet communication via the Modbus TCP or IEC 61850 Edition 2 protocol; serial communication via Modbus RTU and IEC 60870-5-103 via the RS485 interface is optional
- External time synchronization via the Network Time Protocol (NTP)
- The measurands and events are detected according to the power quality standard IEC 61000-4-30. The measurement system corresponds to Class A. In terms of functional scope, measuring ranges and accuracy, SICAM P850 / P855 are Class S devices
- Additional measurands: minimum / mean / maximum values, flicker, event detection, voltage dips (Udip), voltage interruptions and overvoltages (swells)
- Events are evaluated directly in HTML via the integrated web server
- 2-GB memory for recording recorder data
- Evaluations: power quality reports and online viewer output directly on the HTML page
- Data export: PQDIF and COMTRADE data.

6.4.4 SIPROTEC 7KE85 – Fault recorder

Powerful fault recorder with integrated measuring of synchrophasors (PMU) according to IEEE C37.118, and Power Quality measurement according to IEC 61000-4-30. Due to the high flexibility of trigger functions, the SIPROTEC 7KE85 (fig. 6.4-20) is ideally suited to monitor the entire energy value chain from generation to distribution. The powerful automation and flexible configuration with DIGSI 5 complements the range of functions.

SIPROTEC Fault Recorders are a component part of the SIPROTEC 5 modular system and support all SIPROTEC 5 system properties. They can be used individually as well as universally within the scope of system solutions.

The SIPROTEC 7KE85 Fault Recorder is designed to suit present and future requirements in a changing energy market. Powerful and reliable monitoring combined with flexible engineering and communication features provide the basis for maximum supply reliability.

Commissioning and maintenance work can be completed safely, quickly and thus cost-efficiently with high-performance test functions. Through their modular structure, SIPROTEC 5 fault recorders can always be flexibly adapted to specific requirements (fig. 6.4-21).

The SIPROTEC 7KE85 Fault Recorder has the following additional functionalities compared to the SIPROTEC 5 protection devices and bay controllers:

- Sampling configurable from 1 to 16 kHz
- Mass storage of 16 GB
- All recorders capable of running in parallel
- Individually triggered recorders
- Continuous recorders
- Separate activation of the recorders
- Freely configurable memory for each recorder
- Additional quality information supplements the records
- Power Quality recordings
- Recording of GOOSE messages in a continuous recorder.

Distinguishing features
The SIPROTEC 7KE85 Fault Recorder can be configured with different basic functions.

Fault Recorder	Comprehensive flexible, event-triggered and continuous recording options
PMU	Synchrophasor measurement (PMU) as per C37.118 (2011)
Power Quality recordings	Power Quality recordings Continuous measurement of events and failures in the electrical energy supply system according to IEC 61000-4-30

Fig. 6.4-20: Fault Recorder SIPROTEC 7KE85 (1 / 3 device with expansion module)

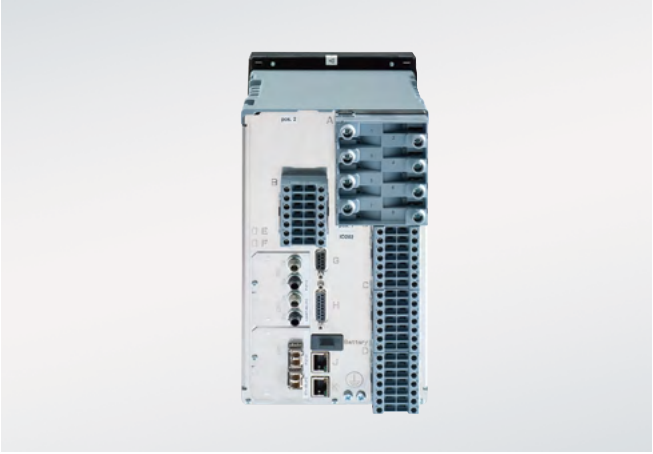

Fig. 6.4-21: Rear view of a basic module

Application as Phasor Measurement Unit

With the fault recorder SIPROTEC 7KE85, the Phasor Measurement Unit (PMU) function is available like in the past.

Fig. 6.4-22 shows the principle. A measurement of current and voltage with regard to amplitude and phase is performed with PMUs on selected substations of the transmission system. Due to the high-precision time stamps assigned to these phasor quantities by the PMU, these measured values can be displayed together at a central analysis point. This provides a good overview of the condition of the system stability, and enables the display of dynamic processes, e.g., power swings.

If the PMU option is selected, the devices determine current and voltage phasors, mark them with high-precision time stamps, and send them to a phasor data concentrator together with other measured values (frequency, rate of frequency change) via the communication protocol IEEE C37.118, see fig. 6.4-23.

By means of the synchrophasors and a suitable analysis program (e.g., SIGUARD PDP), it is possible to determine power swings automatically and to trigger alarms, which are sent, for example, to the network control center.

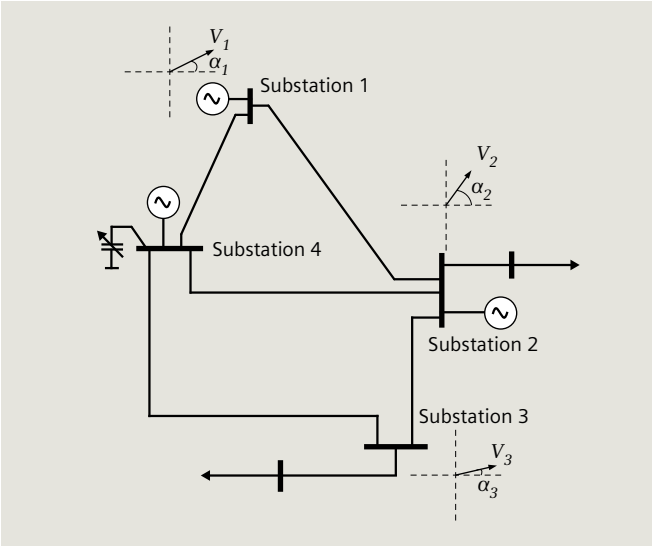

Fig. 6.4-22: Principle of distributed phasor measurement

Intelligent PMU placement is crucial for cost saving and for an optimum observability of the dynamic system behavior. Optimum PMU placement studies are offered as consulting services from Siemens PTI (see Chapter 9).

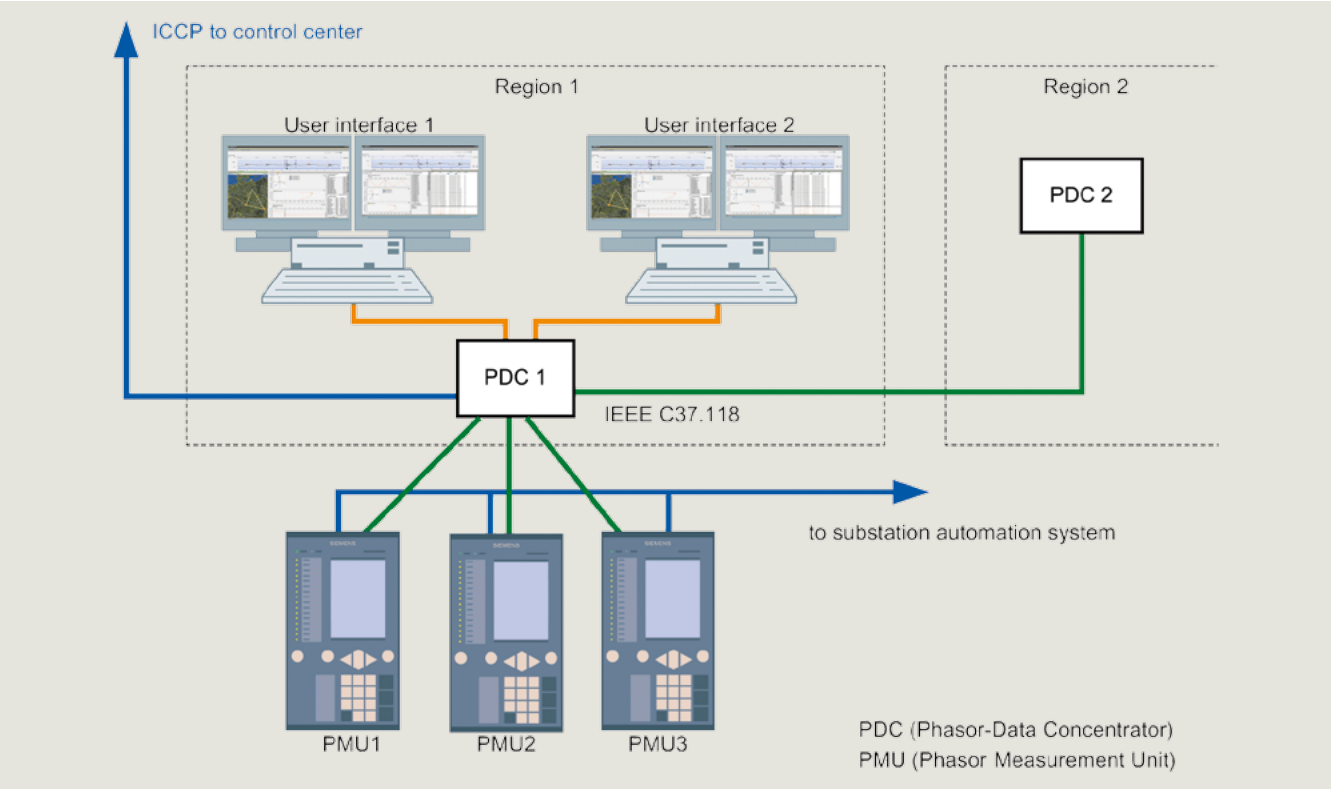

Fig. 6.4-23: Connection of 3 Phasor Measurement Units (PMUs) with two Phasor Data Concentrators (PDCs) SIGUARD PDP

6.4.5 System software

SICAM PQS

SICAM PQS allows all fault records and power quality data to be analyzed in one system. The protection of power distribution equipment is crucial in assuring a reliable power supply. Customers expect maximum availability of electrical power, reflecting a consistently high standard of quality. For example, in power system protection, it is becoming increasingly difficult to distinguish between critical load cases and short circuits with minimal fault currents. The demands on optimum use and the corresponding parameterization of protective devices are rising.

Intensive evaluation of available information from secondary equipment (using fault recorders) is therefore essential. Only this way can today's high levels of reliability and availability in power transmission and distribution networks be ensured for the future as well. There is also concern that the growing use of power electronics often has a noticeable impact on voltage quality. The resulting inadequate voltage quality leads to interruptions, production losses, and high consequential costs. Compliance with the generally valid quality criteria for power supply systems as defined in the European standard EN 50160 is therefore vital.

The basis must be reliable recording and assessment of all quality parameters. Weak spots and potential fault sources can be identified early on and systematically eliminated. With the software solution SICAM PQS, Siemens is setting new benchmarks here: For the first time, it is now possible with an integrated software solution to evaluate and archive centrally and vendor-neutral all power quality data from the field. This gives you a quick and uncomplicated overview of the quality of your system. With SICAM PQS, you can keep an eye on all relevant data, including fault records as well as all power quality measurement data. SICAM PQS can also be easily expanded to create a station control system for combined applications (fig.6.4-24).

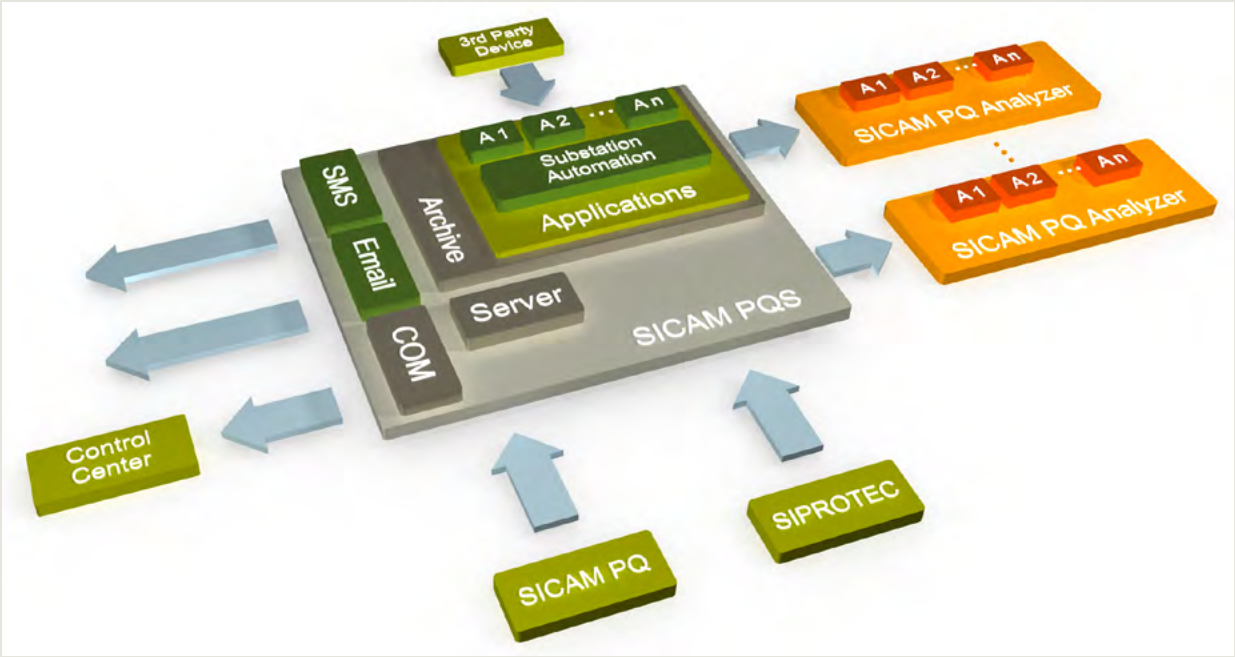

Fig. 6.4-24: SICAM PQS – One System for all Power Quality Data

Applications
The following is an overview of the individual components and their tasks.

SICAM PQS UI – Configuration
The system component SICAM PQS UI – Configuration supports you in the following tasks:
- Configuration and parameterization of your station
- Exchange of configuration data.

SICAM PQS UI – Operation
SICAM PQS UI – Operation provides an overview of the runtime status of your station. The configuration is displayed in tree structure. The different colors show the status of interfaces, devices or other applications.

SICAM PQS – Value Viewer
The SICAM PQS Value Viewer is an important tool for the project phases of configuration, testing, commissioning and operation. Without any additional configuration expenditure, it enables the visualization of process and system information, and informs on the current status of your station.

SICAM PQS – User Administration
Via a User Administration tool, you can assign passwords in order to define which persons can access individual working areas and functions. Users can be assigned one of the following roles: Administrator / System Engineer / Data Engineer / Switch Operator / Guest User.

SICAM PQS – Feature Enabler
Use the SICAM PQS Feature Enabler to enable SICAM PQS system components which you require in your project or on the corresponding computer.

SICAM PQ – Analyzer
The SICAM PQ Analyzer provides comprehensive evaluation options for archived PQ measuring data and fault records. In addition to clearly structured fault record analysis, the fault locator facilitates and accelerates the elimination of faults in the power network. PQ violation reports provide a quick and comprehensive overview of limit value violations. Scheduled reports provide an overview of the development of measuring data over selectable time ranges.

With the aid of a calendar tool available in all views, you can quickly and easily select any time range over which data is to be displayed in a diagram. The calculated PQ index delivers conciseinformation on the quality of your network.

The following various views of the SICAM PQ Analyzer provide the means for evaluation of PQ measuring data and system disturbances.

1
2
3
4
5
6
7
8
9
10
11
12

SICAM PQS functional packages

Incident explorer
Incident explorer is the central navigation interface of SICAM PQS. It acts as a cockpit for the user and delivers a structured overview of events throughout the whole system. It visualizes the contents of the entire power quality archive with fault records, fault locating reports, post-disturbance review reports, power quality reports, and the ability for manual fault location and manual import of comtrade files. The COMTRADE viewer, which is part of the scope of delivery, makes it possible to analyze the fault (fig. 6.4-25).

PQ explorer
PQ explorer makes detailed analyses possible based on comparing the measured power quality data directly with the Grid Codes. This comparison and the large number of different diagrams available for displaying power quality data make it possible to understand the nature and extent of a power quality violation very quickly and to initiate adequate counter-measures (fig. 6.4-26).

Report browser
Reports are created automatically at weekly, monthly and annual intervals, and in the event of a violation of the Grid Code. The report browser shows an overview of these automatically generated reports in selected time ranges, and the assessment of the results. The individual reports can be opened directly in the report browser (fig. 6.4-27).

PQ inspector
The PQ Inspector shows the grid condition over a selectable time range based on the calculated PQ Index. It selectively provides a status overview of measured value groups which can be arbitrarily combined, as well as user guidance for the creation of PQ reports. (fig. 6.4-28).

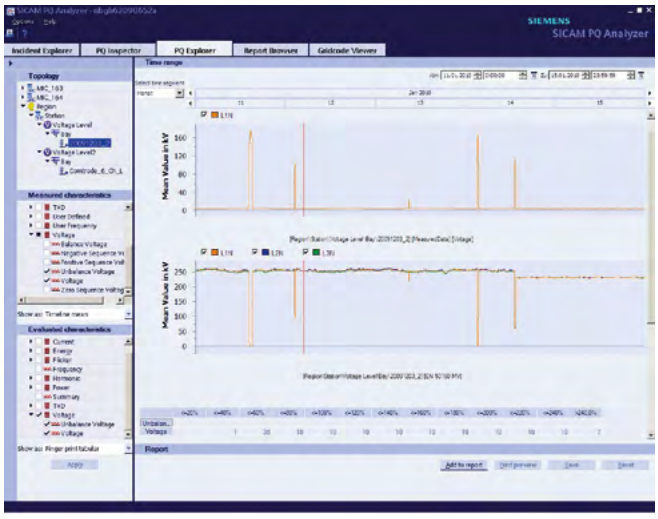

Fig. 6.4-26: PQ explorer

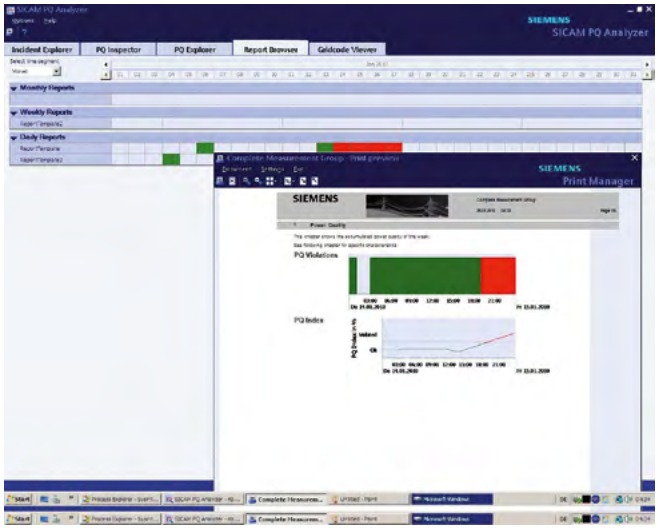

Fig. 6.4-27: Report browser

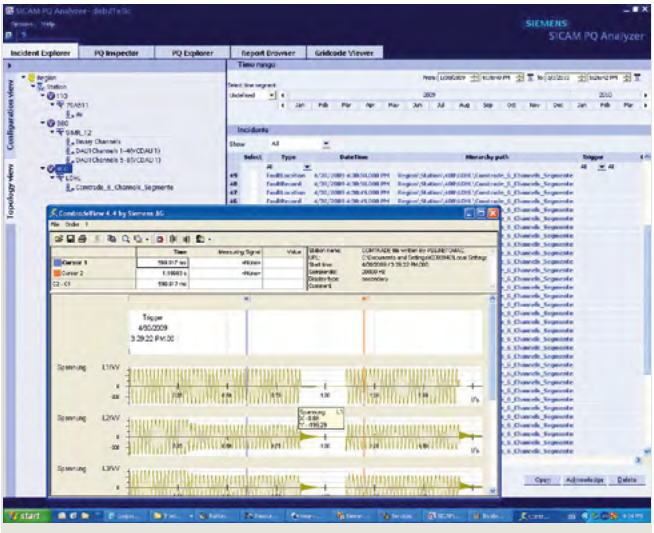

Fig. 6.4-25: Incident explorer

Fig. 6.4-28: PQ inspector

6.4.6 SIGUARD PDP – Phasor data processor

SIGUARD PDP – reliable system operation with wide area monitoring

The load on electricity supply systems has increased continuously over the past few years. There are many reasons for this:

- Increased cross-border power trading in Europe, for example, is placing new demands on the tie lines between control areas. For example, power transmission on tie lines in the European grid increased almost 6-fold from 1975 to 2008 (source: Statistical Yearbook of the ENTSO-E 2008).
- Increased input of wind power and the planned shutdown of existing power plants will extend the transmission distances between generation and consumers.
- Severe weather and storms can put important lines out of operation, for a short time exposing the remaining grid to increased load quickly.

This means that the power system is increasingly operated closer to its stability limit, and new load flows arise that are unfamiliar to network control center operators.

This is where SIGUARD PDP (Phasor Data Processor) comes in. This system for network monitoring using synchrophasors helps with fast appraisal of the current system situation. Power swings and transients are indicated without delay to help the control center personnel find the causes and take counter-measures.

Advantages for the user:

- SIGUARD PDP, a **fast monitoring system,** detects the events and trends in grids with fluctuating load flows or highly loaded lines which conventional systems cannot detect at all or can detect too late.
- Integrated **applications** watch all PMU data streams permanently for critical issues (islanding, undamped power swings), and automatically notify the user.
- Detailed **search of causes** can take place after failures.
- **Investment decisions** for new equipment can be taken based on valid dynamic measurements.
- **Protection settings** can be checked and improved using the measured dynamic processes.

Possible applications

- Analysis of the power flows in the system
  SIGUARD PDP can display a clear and up-to-date image of the current power flows in the system with just a few measured values from widely distributed phasor measurement units (PMU). This requires no knowledge of the network topology. The power flows are shown by means of phase angle differences (see Fig 6.4-29).
- Monitoring of power swings
  All measured values from PMUs can be displayed and monitored with easy-to-configure phasor diagrams and time charts. Any power swings that occur are detected quickly and reliably. The monitored zone can be flexibly adjusted to the current situation in terms of time, geography and content.

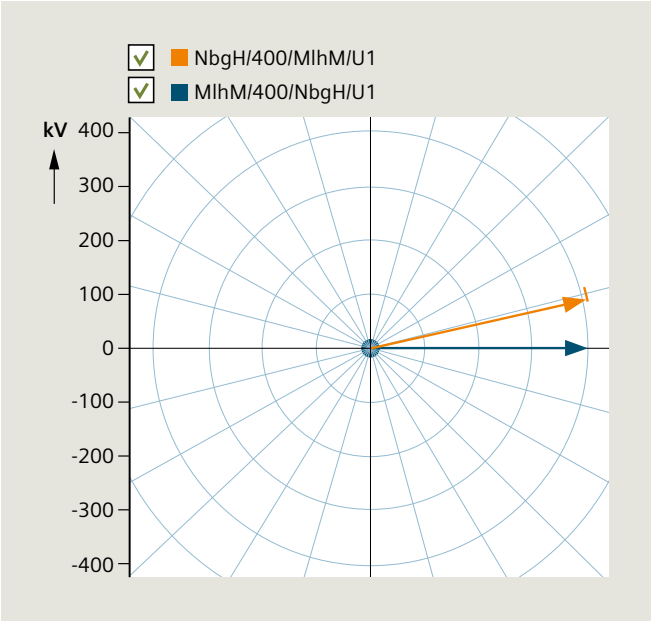

Fig. 6.4-29: Voltage vector of two measurement points in the network

Possible applications (cont.)

- Evaluation of the damping of power swings
  Using the function "Power Swing Recognition" (fig. 6.4-30) an incipient power swing is detected and the appropriate damping is determined. Detection of a power swing and, if applicable, its insufficient or non-existing damping is signaled (alarm list). There are two ways of detecting a power swing: based on angle differences between two voltages (two PMUs necessary) or based on power swing recognition of the active power (one PMU for current and voltage measured values is adequate). Detected power swings are shown in the map view, in mode-oriented or job-oriented overview, and in a frequency-damping-chart.

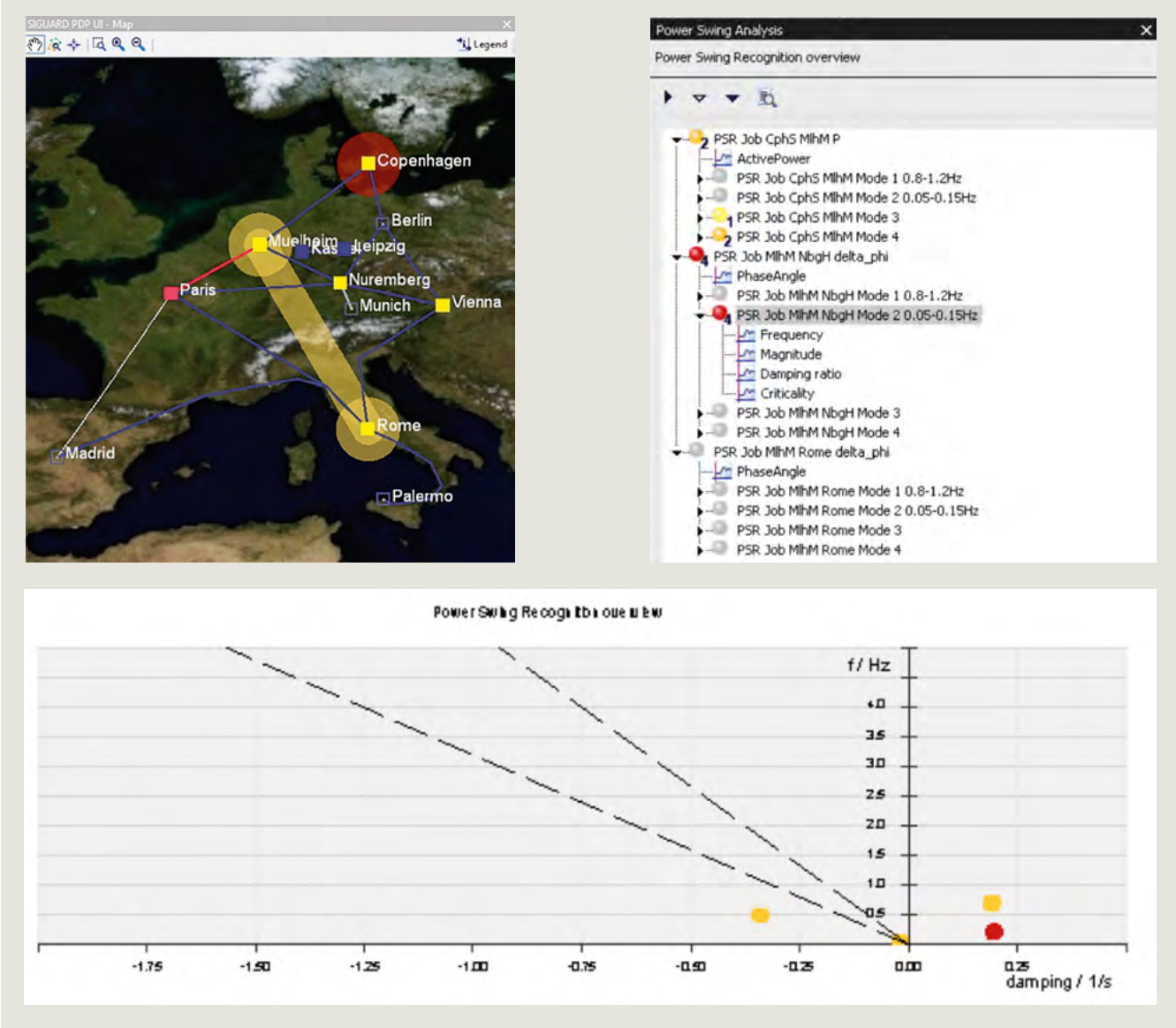

Fig. 6.4-30: Monitoring diagrams from the application "power swing recognition"

- Monitoring of the load on transmission corridors
  The voltage stability curve (fig. 6.4-31) is especially suitable for displaying the instantaneous load on a transmission corridor. The currently measured operating point is shown on the work curve of the line (voltage as a function of the transmitted power). In this way, the remaining reserve can be shown at any time. This requires PMUs at both ends of the line. Detected power swings are shown in the map view, in mode-oriented or job-oriented overview, and in a frequency damping chart.
- Island state detection
  This function automatically indicates if parts of the network (fig. 6.4-32) become detached from the rest of the network. For this purpose, frequency differences and rates of frequency changes can be automatically monitored. If islands are detected, warnings and event messages are generated. In addition, the islands are marked in the graphic overview as colored areas.
- Retrospective event analysis
  SIGUARD PDP is ideal for analyzing critical events in the network. After switchover to offline mode, the entire archive can be systematically analyzed and the events played back as often as necessary. This makes dynamic events transparent, and reports can be quickly and precisely compiled. Simply copy the informative diagrams from SIGUARD PDP into the reports.
- Alarming on limit value violation with an alarm list and color change in the geographic network overview map
  This allows to locate the position and cause of the disturbance quickly. This function is also available for analyzing the archive.
- Display of the power system status as a characteristic value for the stability of the power system
  Due to the constant availability of the power system status curve in the upper part of the screen, the operator is constantly informed about trends in system dynamics and any remaining reserves. This curve shows a weighted average of the distances of all measured values to their limit values.

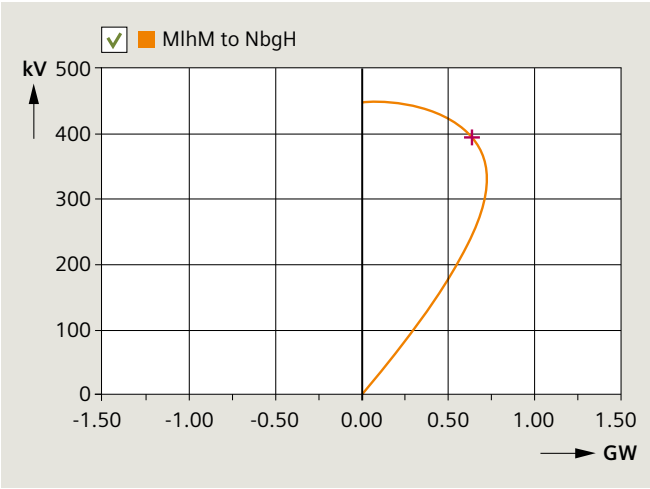

Fig. 6.4-31: Voltage stability curve

11:09:52....	2010-...	Island Detection	ISD potential network subsplit	appearing	Potential network subsplit:
11:09:52....	2010-...	Island Detection	ISD network split	appearing	Network split: ZONE=1 f=4
11:09:52....	2010-...	Island Detection	ISD potential network subsplit	disappearing	Potential network subsplit:

Fig. 6.4-32: Island state detection

Possible applications (cont.)

- Phase Angle Display
  The Phase Angle Display Function can be activated in the geographic overview (fig. 6.4-33). It shows the voltage phase angle values between PMUs in a colored area. Together with the color scale for the voltage phase angles, the operator can check immediately the stability situation in the system. Coloring as well as min / max-values can be set with the SIGUARD PDP Engineer (fig. 6.4-34).
- Event-Triggered Archiving
  Use SIGUARD PDP to automatically save recordings of abnormal system events. Define trigger events such as limit violations, recognized power swings, etc. Select Lead Time and Follow-up time with SIGUARD PDP Engineer (fig. 6.4-35). The system then automatically saves all measurements in case the predefined event happens.
- Automatic Disturbance Recognition
  Based on dynchrophasor data streams of current and voltage, SIGUARD PDP can detect and classify short circuits in the transmission network. By analyzing the frequencies, unsteady changes in generation and consumptions can be found.
- Highly precise frequency calculation
  SIGUARD PDP is able to calculate the frequency from the phase angle differences between voltage phasors. This eliminates noise, is very precise and allows to determine the exact source for the frequency calculation. The frequency can be determined with that method with a precision of better than 1 mHz.
- E-mail notification
  SIGUARD PDP is able to send e-mail notifications when events occur. This function is freely configurable. To avoid frequent e-mails, a waiting time can be set how long an event must be active (for example, limit violation of voltage) until the e-mail is sent out.

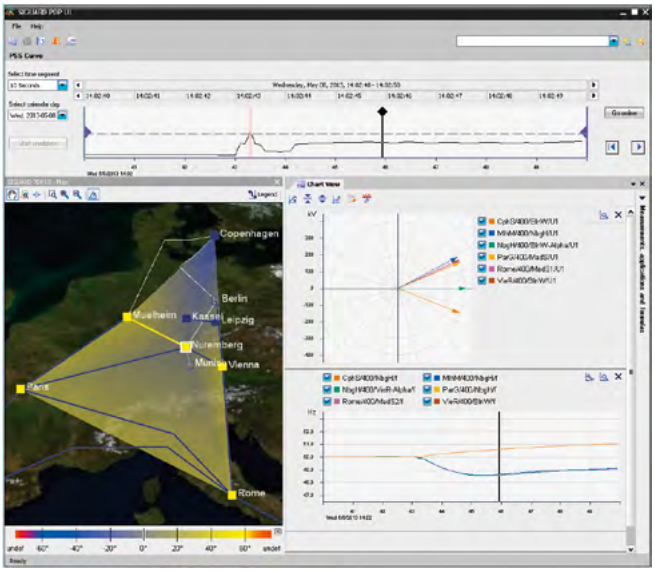

Fig. 6.4-33: Phase Angle Display (in preparation for V3.10)

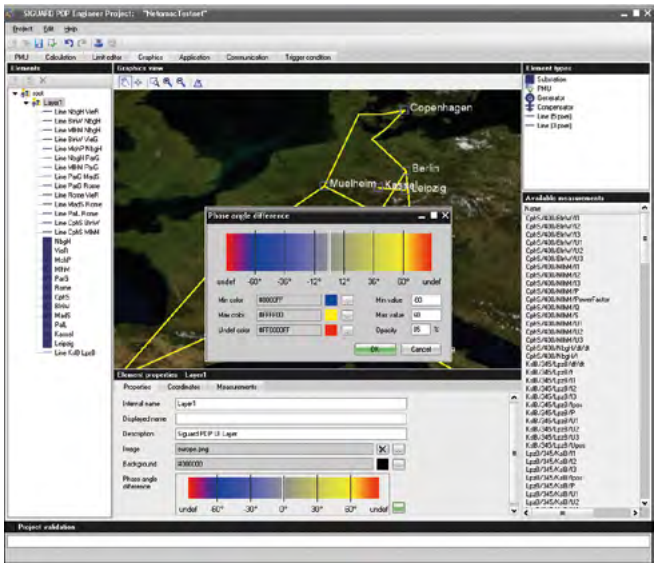

Fig. 6.4-34: Engineering of the Phase Angle Display with the SIGUARD PDP Engineer

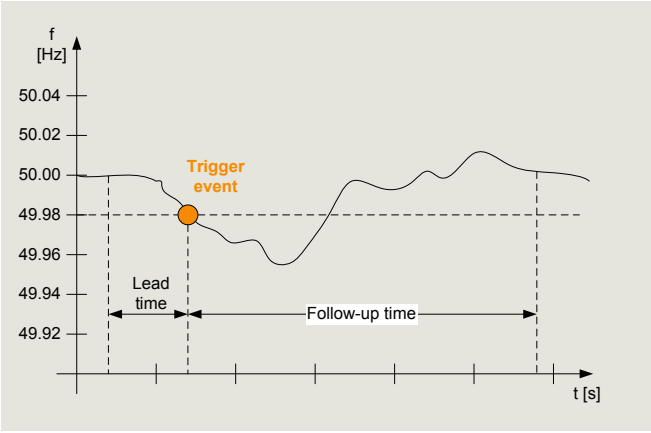

Fig. 6.4-35: Automatic time trigger (example for frequency)

For further information:
siemens.com/powerquality

6.5 Protection and substation communication

The energy automation system of a network station is structured in several levels. The first level (process level) delivers analog and digital signals of the primary devices. These signals are transmitted to the second level (bay level) via parallel copper wiring in most cases. The new process bus technology allows for replacing this wiring with network communication. On bay level, the signals are connected to protection and bay devices, and processed. The station level represents the central level with station automation, as well as operation, monitoring and archiving systems. The connection to the central network control level is made via this level. Fig. 6.5-1 shows the typical signal path across all levels of a network station with the relevant protocols.

6.5.1 Protocols

IEC 61850 (Ethernet protocol)

Communication interfaces on protection relays are becoming increasingly important for the efficient and economical operation of substations and networks.

IEC 61850 client-server communication (IEC 61850-8-1)

Messages as well as measured and metered values can be transferred via the client-server communication in static and dynamic reports to a maximum of 6 clients (substation controllers). Dynamic reports are created and read by the client without resetting the parameters of the device. The static reports are created via the IEC 61850 system configurator and are permanently saved in the device as indication lists. Fault records can also be retrieved in binary COMTRADE format. Extensive control functions are available from the client, such as for the safe switching of a circuit-breaker. The setting parameters of the device can be read and also changed via the IEC 61850 protocol. The devices can be integrated in interoperable intelligent Smart Grids without difficulty. Changing the device parameter settings during operation is possible through substation controller equipment in order to adapt selected setting parameters to the operating conditions. Redundant solutions can be realized with 2 Ethernet modules.

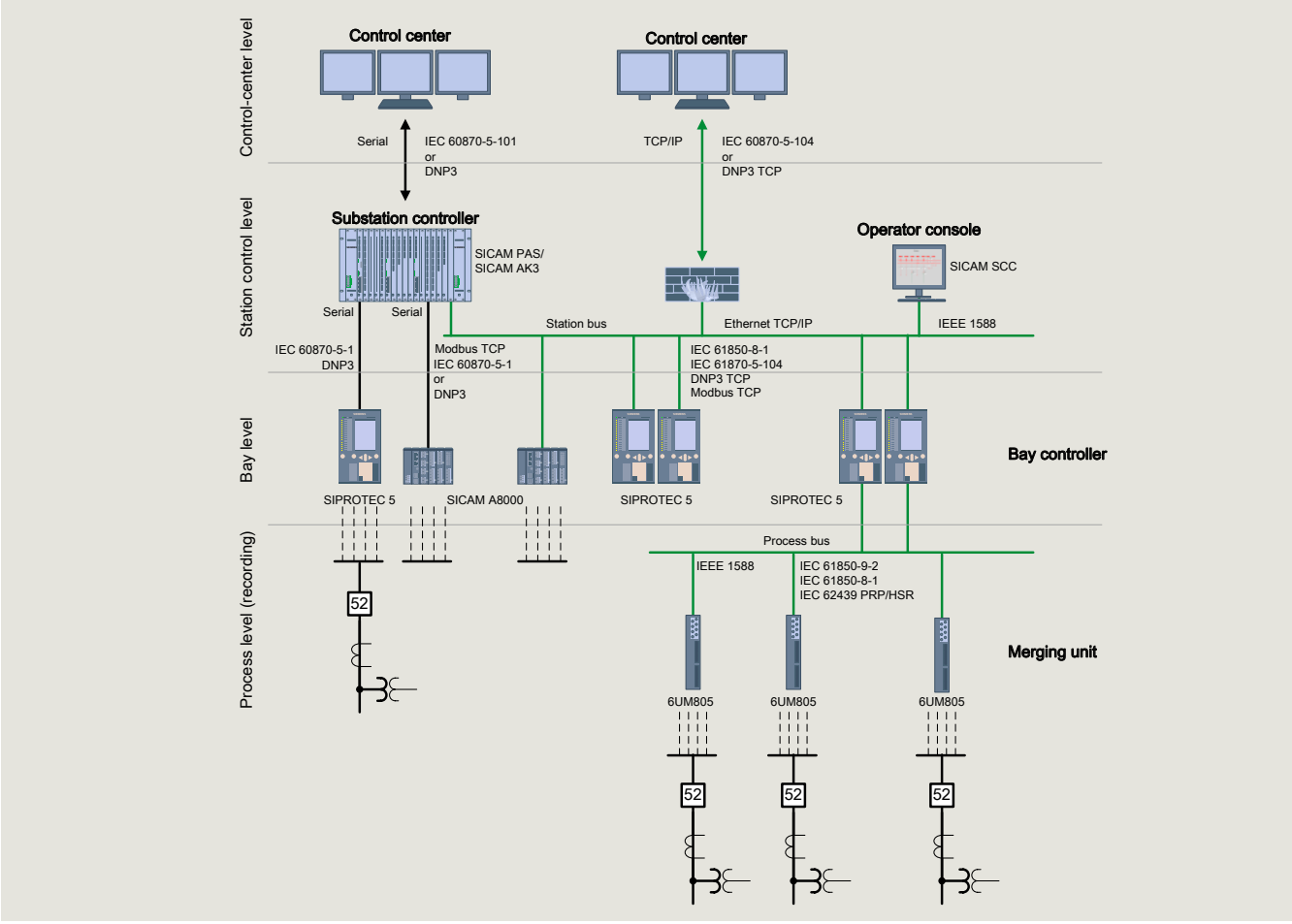

Fig. 6.5-1: Example of protection and substation communicaton

GOOSE (IEC 61850-8-1)
GOOSE has become established as the global standard for cross-communication, the transmission of messages and measured values, directly between devices. In addition to GOOSE between devices within a substation, GOOSE is supported between devices in different substations as well. Regarding data, the exchanged information is described via standard-conforming SCL data which are defined in Edition 2 of IEC 61850. High-performance IP network connections or Ethernet network connections are used for the exchange itself. This data exchange can also be made via an Ethernet module which is only used for this purpose.

Time-critical information requiring transmission within in few milliseconds can be exchanged via GOOSE messages, replacing the transmission via contacts and binary inputs – protection signals require transmission times of less than 10 ms, switch positions and locks need less than 20 ms. Measured and metered values are transmitted in less than 100 ms. The GOOSE applications required for that are generated in the system configurator and are exchanged by the devices via high performance GOOSE messages.

Recipients of GOOSE messages can constantly monitor the receipt of messages and measured values for connection failures. The condition of failed messages is automatically updated at the recipient side, ensuring a safe condition. This allows for constant, high-quality monitoring of the GOOSE communication.

GOOSE messages sent during the test operation of a device are ignored in the recipients, if these are in normal operation. A device can be tested without having to disconnect it from the communication network.

Process bus (IEC 61850-9-2)
The process bus measures current and voltage in a device (merging unit). The measured values are digitalized in the merging unit, and transported to the protection devices via optical Ethernet connections with the help of the IEC 61850-9-2 communication protocol. The protection devices no longer work with analog measured values, but directly use the digitalized measured values from the sampled values data stream. The merging units are positioned in close proximity to the transformer to minimize wiring work. The sampled values' data stream generated by the merging units can be transmitted to one or several protection devices. The PB201 extension module for SIPROTEC 5 enables simple upgrading from SIPROTEC 5 devices to process bus solutions.

IEC 60870-5-101 (serial protocol)
The widely used serial protocol IEC 60870-5-101 is an official telecontrol communication standard, and is used as a transmission protocol between substations and network control systems.

IEC 60870-5-103 (serial protocol)
The serial protocol is transmitted via RS485 or an optical 820 nm interface. Initially developed as a communications standard for the transmission of digital protection system messages, the serial protocol is by now also used to transmit control commands and messages in addition to protection messages and fault records. These additional commands and messages are transported in the so-called private area of the protocol, and are documented depending on the device. It is also possible to read or modify setting values in devices using the generic services of the protocol.

The implementation of the devices is compatible to existing solutions (e.g., SIPROTEC 4 devices).

Device information can be marshalled on the protocol interface by the user with DIGSI 4/5. Information types and function numbers can be configured as desired. This allows for adapting to existing solutions, as well as a smooth device exchange without the need for changes to the control equipment. This is not least an important contribution for investment security.

IEC 60870-5-104 (Ethernet protocol)
This is a general transmission protocol between substations and network control systems, and facilitates communication via networks (LAN and WLAN). Siemens' electrical and optical Ethernet modules support the substation and control station protocol IEC 60870-5-104. Indications (single and double), and measured values, metered values can be transmitted to one or two (redundant) masters. IEC 104 file transfer is also supported, and fault recordings can be read out of the device in COMTRADE format. In the command direction, secured switching of switching objects is possible via the protocol. Time synchronization can be supported via the IEC 60870-104 master or via SNTP across the network. Redundant time servers are supported.

DNP3 serial / DNP3 TCP (Ethernet protocol)
DNP 3 is supported as a serial protocol via RS485 or an optical 820 nm interface, and as an Ethernet-based TCP variant via the electrical or optical Ethernet module. Information about a device, as well as the fault records of the device, can be routed and transferred using the DNP 3 protocol. Switching commands can be executed in the control direction.

Modbus RTU (serial protocol) / Modbus TCP (Ethernet protocol)
The Modbus TCP communication protocol is supported by the electrical or optical Ethernet module. Modbus TCP and Modbus RTU are very similar, with Modbus TCP using TCP/IP packets for data transfer. Modbus TCP can be used to transmit indications (single- and double-point indications), measured values, metered measurands to one or two (redundant) masters. Switchgear can be switched in command direction via the protocol.

IEEE C37.118 synchrophasors (Ethernet protocol)

SIPROTEC 5 devices optionally calculate synchrophasors and work as a Phasor Measurement Unit (PMU). These measured values, which are synchronized across large geographic areas via a high-precision second pulse, allow for assessment of power system stability. These values are transferred via an Ethernet network with the IEEE C37.118 protocol to a data concentrator. Transfer occurs via an optical or electrical Ethernet module (Fig. 6.5-2).

Further Ethernet-based protocols and services

- RDTP (Rapid Spanning Tree Protocol)
- HSR (High-Availability Seamless Redundancy Protocol)
- PRP (Parallel Redundancy Protocol).

Besides the actual protocol application, these services can run in parallel on an Ethernet module, and can be switched on and off by the user with DIGSI 5. The redundancy methods PRP and HSR can be activated with a setting parameter, and have no further parameters. This means, they are easy to configure. The number of network participants is limited to a maximum of 512 for both methods.

RSTP (Rapid Spanning Tree Protocol)

Rapid Spanning Tree Protocol is a redundancy method standardized in IEEE-802.1D (2004) with a short reaction time. Reconfiguration times depend on the topology and start at approx. 50 ms. The redundancy protocol RSTP supports electrical and optical Ethernet modules in the setup of redundant ring structures in the Ethernet.

Redundancy protocol HSR (High-Availability Seamless Redundancy Protocol)

The HSR redundancy protocol as per the IEC 62439-3 standard is based on simultaneous transmission of message frames over ring-topology networks in both directions (double transmission).

In case of a fault on one side in the network ring, the transmission of the message frame is ensured via the second side without delay. No reconfiguration time (relearning of the communication paths) is necessary for the network, as would be the case for most other redundancy protocols.

In ring-topology networks, seamless data transmission is implemented for high-availability plants using the HSR protocol as per standard IEC 62439-3.

Redundancy protocol PRP (Parallel Redundancy Protocol)

The PRP redundancy protocol as per the IEC 62439-3 standard is based on double transmission of message frames over two separate networks.

Seamless data transmission is particularly reliable and highly available in parallel networks.

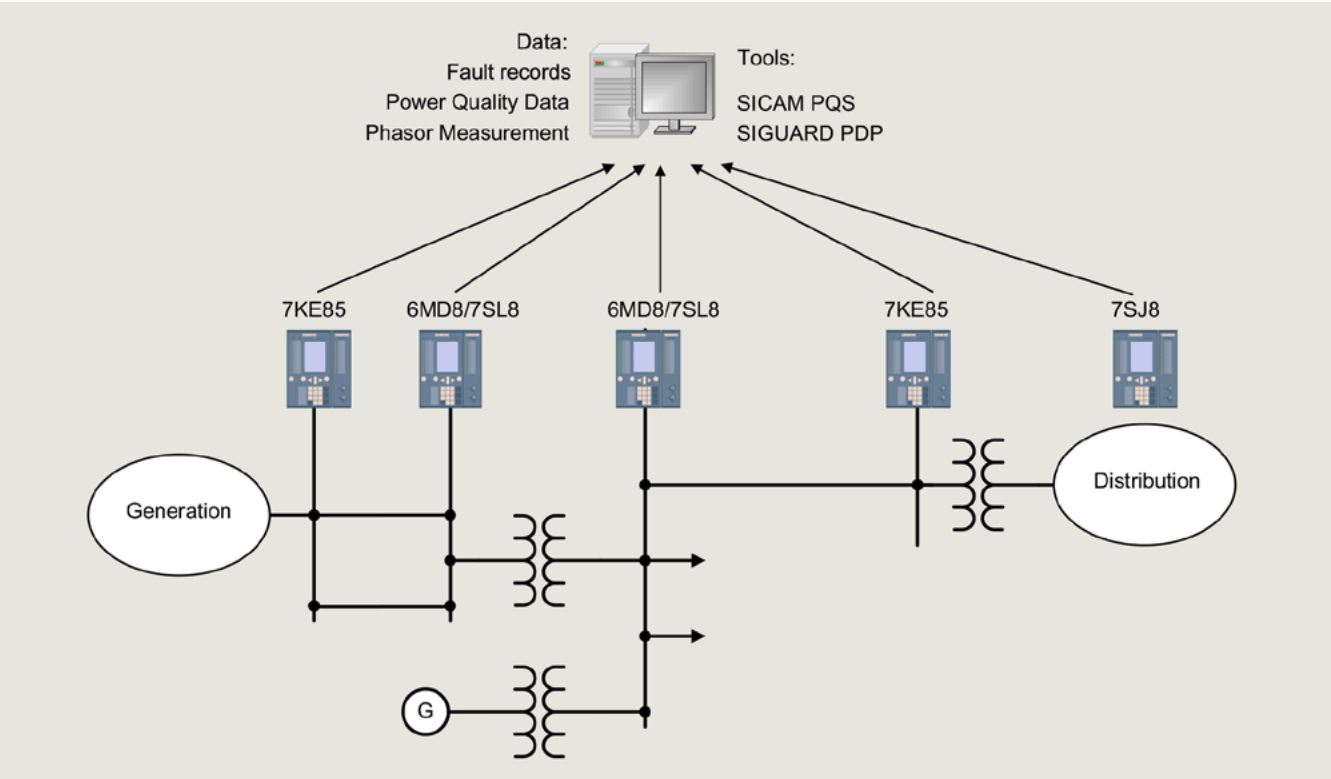

Fig. 6.5-2: Transfer via an optical or electrical Ethernet module

Time synchronization with SNTP
The device can poll the absolute time from 1 or 2 time servers via an SNTP server, e.g., in the hardened unit 7SC80. In redundant operation, both servers are read and the time of the first server is used for setting the device clock with a precision of 1 ms. If this server fails, time synchronization takes place via the second server. In addition to Ethernet modules, SNTP can also be used via the integrated Ethernet interface.

Time synchronization with IEEE 1588
For greater precision of time synchronization via Ethernet, the IEEE 1588 protocol is available. It can be activated on electrical or optical Ethernet modules. The precondition is that the network components, e.g., switches, support the protocol, and that special IEEE 1588 time servers are present in the network. With IEEE 1588, the signal propagation times of the time synchronization telegrams in the Ethernet network are measured so that the terminal devices, e.g., SIPROTEC 5, receive time information that is corrected by the signal propagation time, providing more precise timing than SNTP. The power profile IEEE 1588 C37.238 is supported, and the devices function as ordinary clocks (terminals) in the network.

Network monitoring SNMP
The device can be integrated in network monitoring or network management systems via the SNMP V3 protocol. Extensive monitoring variables, e.g., the state of the Ethernet interfaces, their data throughput, etc., can be made known to the monitoring system via MIB (Management Information Base) fies. These variables are described in data-specific terms in MIB files, and can be cyclically read out and monitored by the monitoring system. No values can be changed in the device via SNMP. It serves exclusively as a diagnosis interface.

6.5.2 Multiple communication options with SIPROTEC 5

The SIPROTEC 5 modular concept ensures the consistency and integrity of all functionalities across the entire device series. Powerful and flexible communication is the prerequisite for distributed and peripheral system landscapes. In SIPROTEC 5, this is a central element of the system architecture enabling a wide variety of communication requirements to be satisfied while providing utmost flexibility.
Fig 6.5-3 shows a possible hardware configuration equipped with 4 communication modules. Fig 6.5-4 shows the CB202 expansion module with 3 slots for plug-in modules. Two of these slots can be used for communication applications.
Owing to the flexibility of hardware and software, SIPROTEC 5 features the following system properties:

- Adaptation to the topology of the desired communication structure, such as ring or star configurations
- Scalable redundancy in hardware and software (protocols)
- Multiple communication channels to various superordinate systems
- Pluggable communication modules that can be retrofitted

Fig. 6.5-3: SIPROTEC 5 device with 4 communication modules

Fig. 6.5-4: CB202: expansion modules with communication modules and analog input module

- The module hardware is independent of the communication protocol used
- 2 independent protocols on a serial communication module
- Up to 8 interfaces are available
- Data exchange via IEC 61850 for up to 6 clients using an Ethernet module or the integrated Ethernet interface.

Communication examples with SIPROTEC 5

Regardless of the desired protocol, the communication technology used enables communication redundancies to be tailored to the requirements of users. They can basically be divided into Ethernet and serial communication interfaces.

- Serial interfaces
- Ethernet interfaces.

Different degrees of protocol redundancy can be implemented. The 4 plug-in module slots limit the number of independent protocol applications that run in parallel. For serial protocols, 1 or 2 masters are usually used.

Serial interfaces

Redundant or different serial protocols are capable of running simultaneously in the device, e.g., DNP 3 and IEC 60870-5-103. Communication is effected to one or more masters.

Two serial protocols can run on a double module (fig 6.5-5). It is not relevant in this context whether these are two protocols of the same type or two different protocols.

The communication hardware is independent of the required protocol. This protocol is specified during parameterization with DIGSI 5.

Ethernet interfaces

The Ethernet module can be plugged in once or multiple times in the device. This enables running identical or different protocol applications in multiple instances. Multiple networks are possible for IEC 61850 or DNP3 TCP, but they can also be operated in a common Ethernet network. A module implements the IEC 61850 protocol application, e.g., the data exchange between devices using GOOSE messages. The other module is responsible for the client-server communication over the DNP TCP protocol. The client-server architecture of IEC 61850 enables one server (device) to send reports to up to 6 clients simultaneously. In this case, only one network is used.

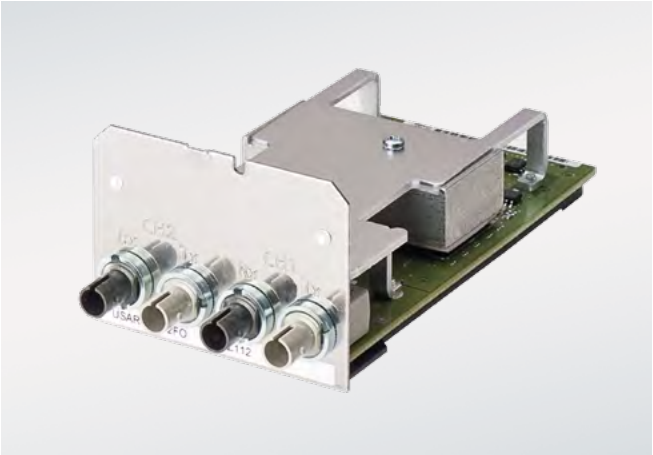

Fig. 6.5-5: Serial optical double module

6.5.3 Topologies

Serial topologies

RS 485
The simplest version is the serial bus wiring in accordance with RS 485 in which the field devices are electrically connected to a master interface on the SICAM central unit (fig. 6.5-7). Special attention should also be paid to correct handling of the earthing, and also to possible impact on the EMC due to the primary technology or power cables. Separate cable routes for power supply and communications are an essential basis for this. A reduction of the number of field devices per master to about 16 to 20 devices is recommended in order to be able to make adequate use of the data transfer performance.

Star configuration
A star configuration of the wiring is rather easy to handle and can be in the form either of electrical wiring as per RS 232, or optical fiber. Here again, the number of devices per master should be limited as before (fig. 6.5-8).

Ethernet – Network topologies

Regardless of the selected protocol (IEC 61850, DNP3 TCP, IEC 60870-5-104), the electrical and optical Ethernet module (fig. 6.5-6) are supported by different network topologies.

Network redundancy with RSTP

Multipoint-star configuration
If the module works without an integrated switch that can be switched off through DIGSI 5, it is connected to external switches individually or redundantly. In the case of a double connection, only one interface processes the protocol applications. The second interface works in (hot standby), and the connection to the switch is monitored. In the case of an outage of interface 1, a switch is made to interface 2 within just a few milliseconds (fig. 6.5-9).

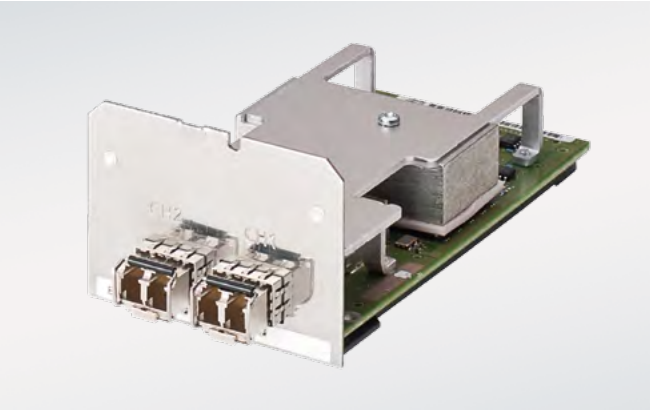

Fig. 6.5-6: Optical Ethernet module

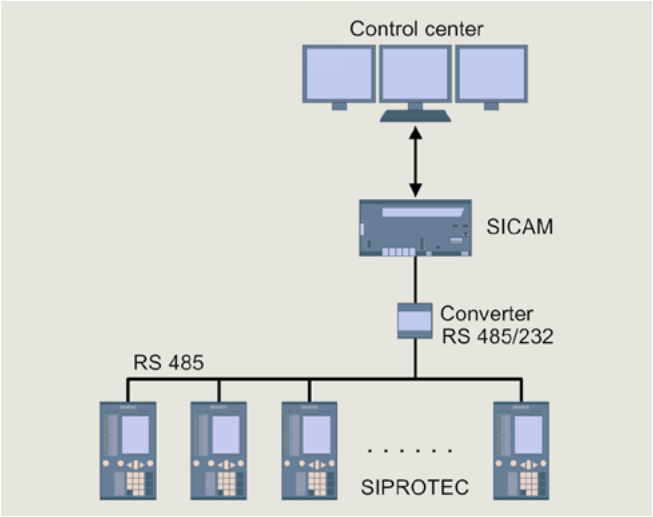

Fig. 6.5-7: Serial bus wiring in accordance with RS 485

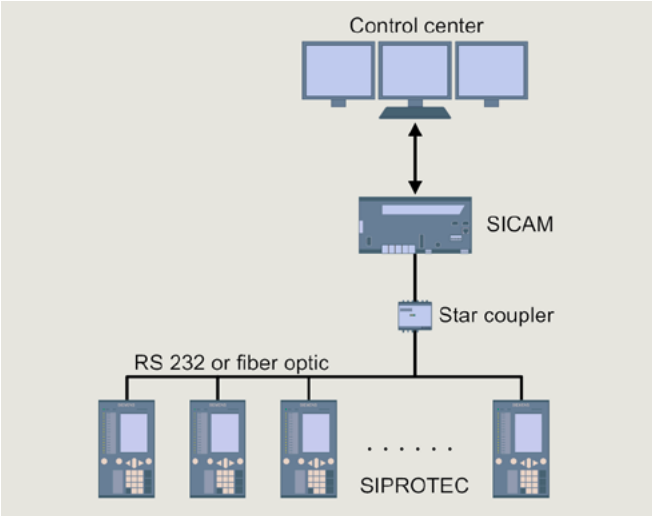

Fig. 6.5-8: Star wiring in accordance with RS 232 or per fiber-optic cable

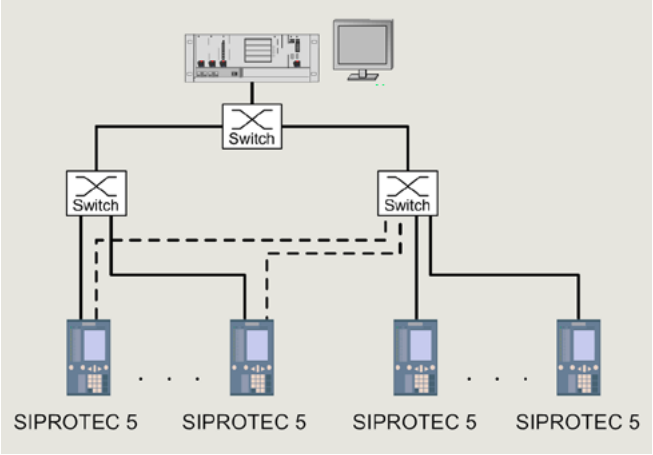

Fig. 6.5-9: Single or redundant connection to external switches

Ring topology
Electrical or optical rings with a maximum of 40 devices can be established with an integrated switch (RSTP) (fig. 6.5-10). Both interfaces of the module transmit and receive simultaneously. Mixed operation with SIPROTEC 4 devices is possible in the ring with a maximum of 30 devices. A special ring redundancy process, based on RSTP, ensures short recovery times in the event of the outage of a device so that the protocol applications continue running nearly interruption-free. This configuration is also independent of the protocol application that runs on the Ethernet module.

Topology for Ethernet redundancy with PRP and HSR
PRP and HSR are usually combined in practice, that means ring configurations (HSR) are coupled to two parallel networks (PRP), see fig. 6.5-11.

HSR and PRP can be combined using so-called "redboxes" (redundancy boxes). This cost-efficient solution according to IEC 62439-3 can be designed in the following manner:
- 2 switches in the control center
- 2 switches in the bay
- 2 redboxes (RB) per HSR ring
- Up to 50 devices per HSR ring
- Easy expansion using two additional PRP switches.

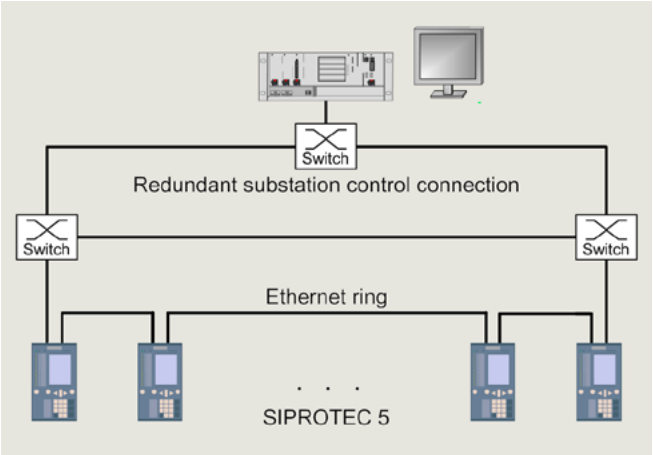

Fig. 6.5-10: Ring operation with integrated switch and ring redundancy

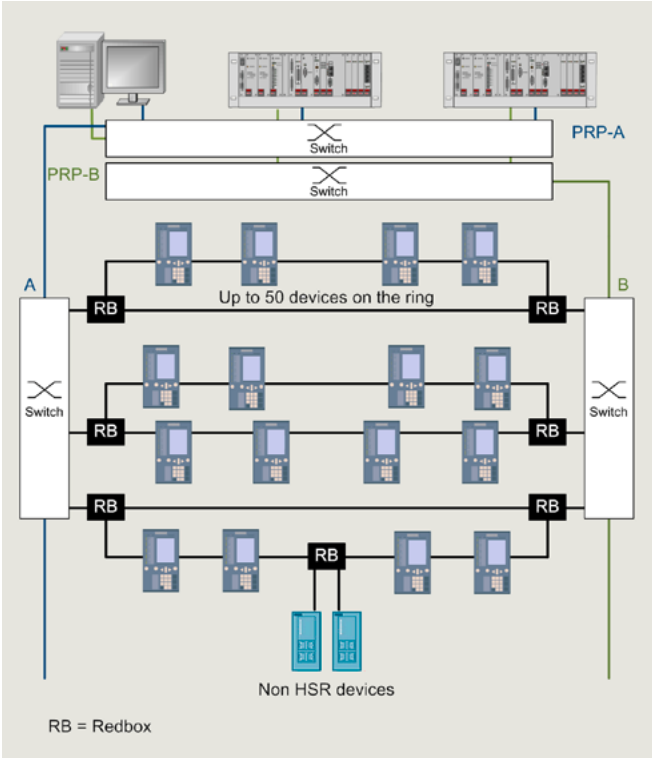

Fig. 6.5-11: Economical seamless n-1 structure

Topology for process bus with parallel operation of analog and digital (process bus) connection of a transformer
The process bus transmits the signals and measured values from the merging unit at process level to the devices at bay level (fig. 6.5-12).

The Ethernet standard and the standard IEC 61850-9-2 are used here. The topologies for process bus applications are based on the typologies for the redundancy methods PRP and HSR described above. Redundancy methods are key ingredients for the operative and reliable use of a process bus.

To test the process bus technology, a simple protection can be used for a feeder. Modern protection devices such as the SIPROTEC 5 series have a modular expandable design. For instance, an existing SIPROTEC 7SJ85 overcurrent protection device can be expanded with process bus inputs. This enables a cost-efficient piloting. As another benefit, state-of-the-art protection devices are capable of efficiently protecting more than one object. One SIPROTEC 7SJ85, for example, is sufficient to protect up to seven feeders. These two features and the fact that overcurrent protection only requires the currents of a merging unit enable effective parallel operation. If a system with less than seven feeders is protected with one device, this device will still have available capacity. This allows for a parallel arrangement with the process bus. For this purpose, the device is fitted with a process bus input module, and the feeder current is simultaneously measured in a merging unit. The current measured by the merging unit is subsequently connected to the protection device via the process bus. The protection device receives the measured current values twice. Once, it measures the values itself, and the second time it receives the current values via the process bus. The protection function is instantiated twice. The protection device protects the same feeder via the conventional setting and via the process bus. This enables direct comparison of the process bus and the direct measurement.

Multiple communication channels
The user can implement different levels of redundancy. The number of independent protocol applications running in parallel is limited by the 4 plug-in module positions. A serial protocol can be run twice on a double module, but it can also be implemented on 2 modules. Different serial protocols can be run in the device simultaneously, for example, DNP3 and IEC 60870-5-103. Communication occurs with one or more masters.

The transfer occurs interference-free via optical fibers. For the IEC 60870-5-103 protocol, special redundancy processes are supported in the device. Thus, a primary master can be set that is preferred over the second master in the control direction. The current process image is transferred to both masters (fig. 6.5-13).

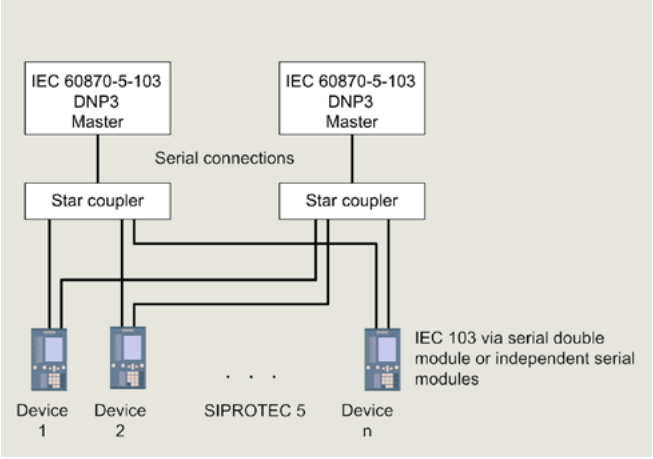

Fig. 6.5-13: Redundant optical connection of devices to IEC 60870-5-103 or DNP3 master (for example, SICAM PAS)

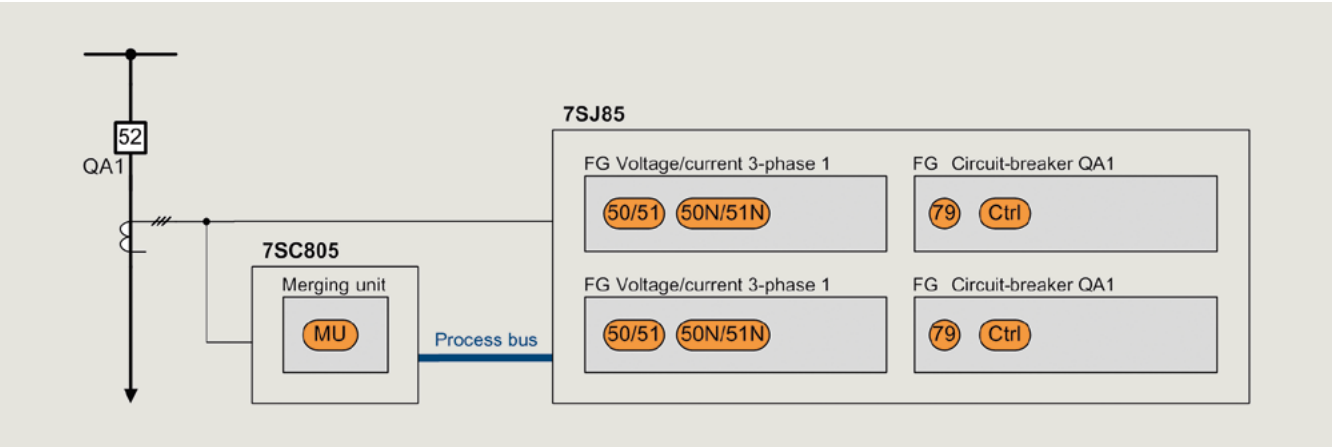

Fig. 6.5-12: Arrangement relative to parallel operation in the feeder with process bus

The Ethernet module can be plugged into the device one or more times. This allows the same or different protocol applications to be executed multiple times. For IEC 61850, several networks are possible: For example, one for client-server communication to a system controller, and a second for the GOOSE connections between the devices that could be assigned to the process bus (fig. 6.5-14). Through the client-server architecture of IEC 61850, one server (device) can simultaneously send reports to a maximum of 6 clients. The doubling of the interfaces on the Ethernet module enables the establishment of redundant network structures, for example, optical rings or the redundant connection to 2 switches.

Protection interfaces can be implemented in double. If one connection fails, a switch is made to the second connection.

Some examples are shown in fig. 6.5-14 and fig. 6.5-15.

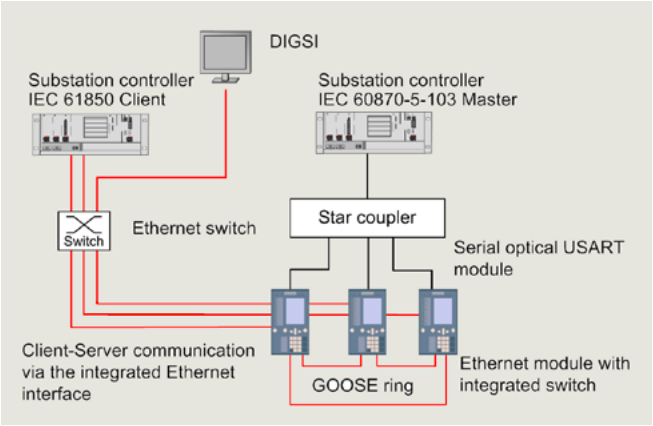

Fig. 6.5-14: Separate client-server and GOOSE communication via IEC 61850 with another serial connection to an IEC 60870-5-103 master

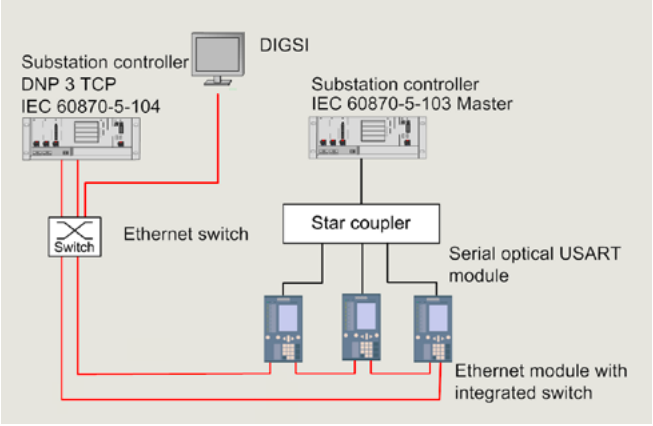

Fig. 6.5-15: DNP3 TCP/IEC 60870-5-104 communication with further serial connection with an IEC 60870-5-103 master

6.5.4 Transfer of data via the protection communication

The protection interface and protection topology enable data exchange between devices via synchronous serial point-to-point connections from 64 Kbps to 2 Mbps. These connections can be directly via optical fiber, or via other communication media such as leased lines in communication networks. A protection topology consists of 2 to 6 devices, which communicate point-to-point via communication links. It can be structured as a redundant ring or as a chain structure (see fig. 6.5-16), and within a topology the protection interfaces can have different bandwidths. A certain amount of binary information and measured values can be transmitted bidirectionally between the devices, depending on the bandwidth. The connection with the lowest bandwidth establishes this quantity. The user can route the information with DIGSI 5. This information has the following tasks:

- Topology data and values are exchanged for monitoring and testing the connection.
- Protection data, for example, differential protection data or directional comparison data of the distance protection, is transferred.
- The devices can be synchronized in time via the connection, whereby a device of the protection topology assumes the role of the timing master.
- The link is continuously monitored for data faults and failure, and the runtime of the data is measured.

Protection interfaces integrated in the device have previously been used for differential protection (see fig. 6.5-16) and the permissive overreach transfer trip scheme for the distance protection. In addition to these protection applications, protection interfaces can be configured all devices for SIPROTEC 5. At the same time, any binary information and measured values can be transferred between the devices. Even connections with low bandwidth, such as 64 Kbps, can be used for this. Protection interfaces that mainly serve to transfer data for the differential protection are designated type 1 links and are used in the SIPROTEC 7SD8 and 7SL8 devices. Connections for transferring any data that can be configured in the other devices (for example, SIPROTEC 7SA8, 7SJ8) are type 2. The protection interfaces must be of the same type on both sides. Fig. 6.5-17 to fig. 6.5-22 (see next page) show possible communication variants for establishing protection communications.

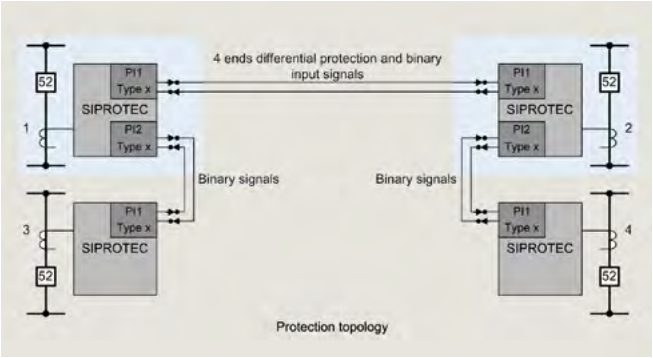

Fig. 6.5-16: Protection communication of the differential protection, and transmission of binary signals

Possible communication variants for establishing protection communications

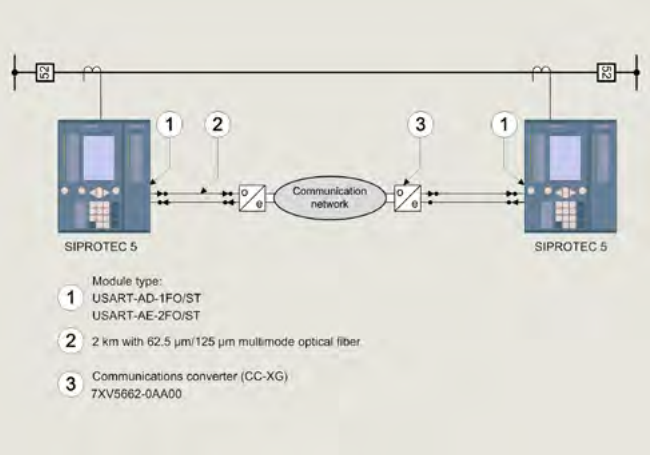

Fig. 6.5-17: Protection communication via a communication network with X21 or G703.1 (64 kbps / G703.6 (2 Bit) interface)

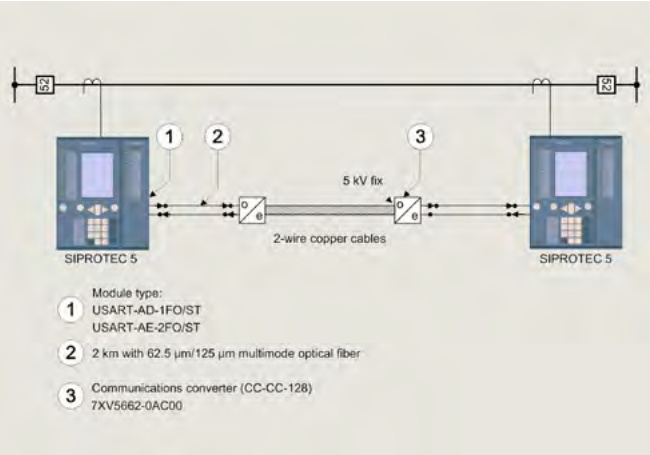

Fig. 6.5-18: Protection communication via a copper connection

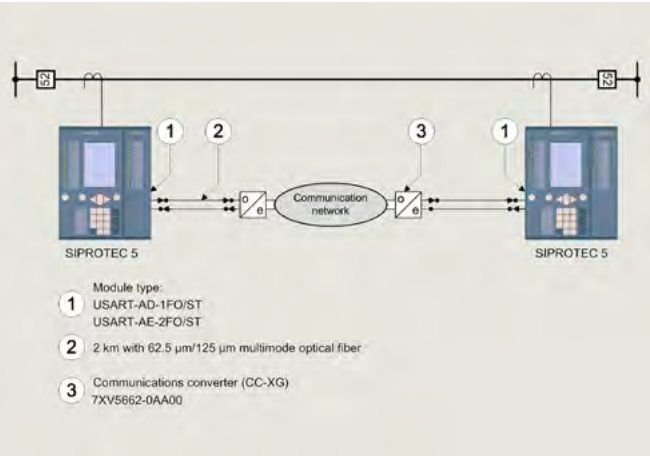

Fig. 6.5-19: Protection communication via an IEEE C37.94 (2 Bbps) interface – direct optical fiber connection to a multiplexer

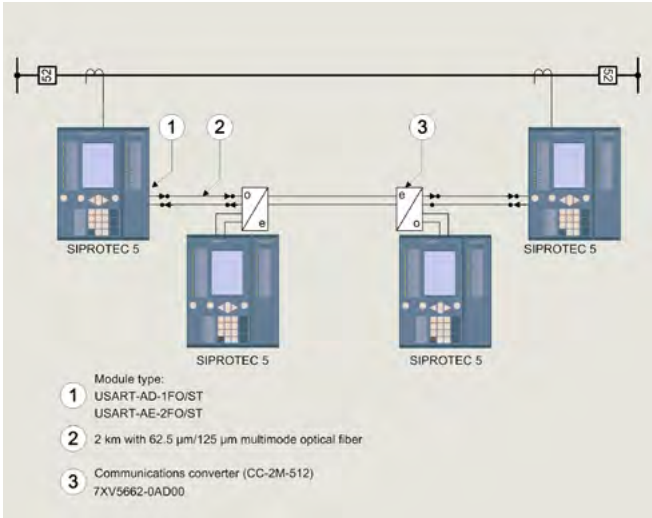

Fig. 6.5-20: Protection communication via single-mode fiber and repeater

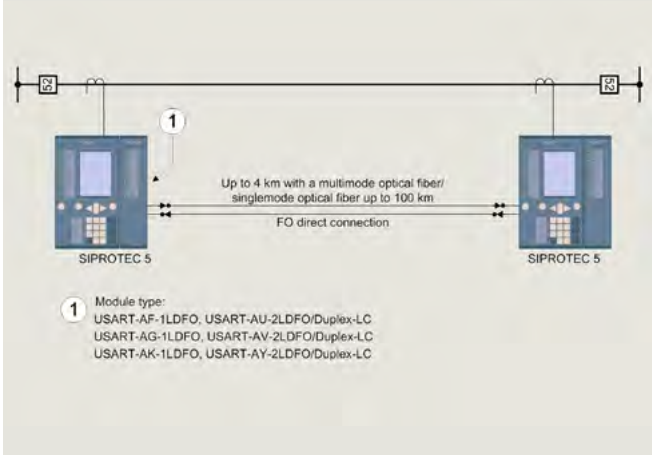

Fig. 6.5-21: Protection communication via direct optical fiber

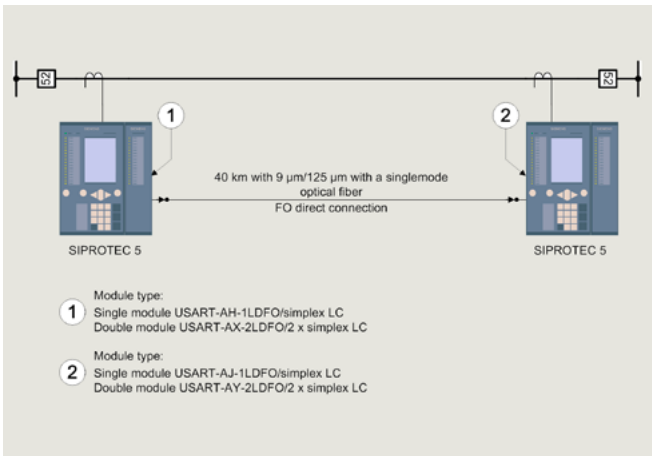

Fig. 6.5-22: Protection communication via single-mode fiber

6.6 Efficient network and energy automation systems

The importance of energy automation for power grids today

Energy automation is a highly complex topic, not least of all because the considerable number of products and systems that make up a given solution must work perfectly together within the network. The change in energy grids, from generation to transmission and distribution, affects the structure and operation of power grids, as well as and the supporting functions and applications of energy automation. In addition to stabilizing power grids, intelligent energy automation helps to reduce energy consumption and costs. Due to this fact, the optimized capacity utilization of power grid assets takes the highest priority for utility companies, municipal utilities, and industry. Maximum reliability and availability are crucial, and it is important that redundant systems are only as good as the weakest part of it.

Main challenges and questions for the design of energy automation systems

To remain competitive from a cost perspective over the long term means to rely on a system with optimized total costs over the entire useful life of a system, from the initial investment through the operation.

There may be chances during the lifecycle of the energy automation system that are not known today. This future demand can be addressed already today by scalable systems that are easy to expand, updated and retrofitted.

A main value of an automation system is the data model. The data model still remains the same even if the automation system is changed, because it is based on the process level (e.g., switchgear). The value of the data model can be preserved on a long-term basis through systematic data transfer and an evolutionary development of existing systems.

To benefit from technological advances on a continuing base, while remaining flexible, it is necessary to work with standardized communications based on open interfaces.

For system integration without any problems, the right system architecture (redundancies, communication, system functions) and all interfaces have to be clearly defined and optimized.

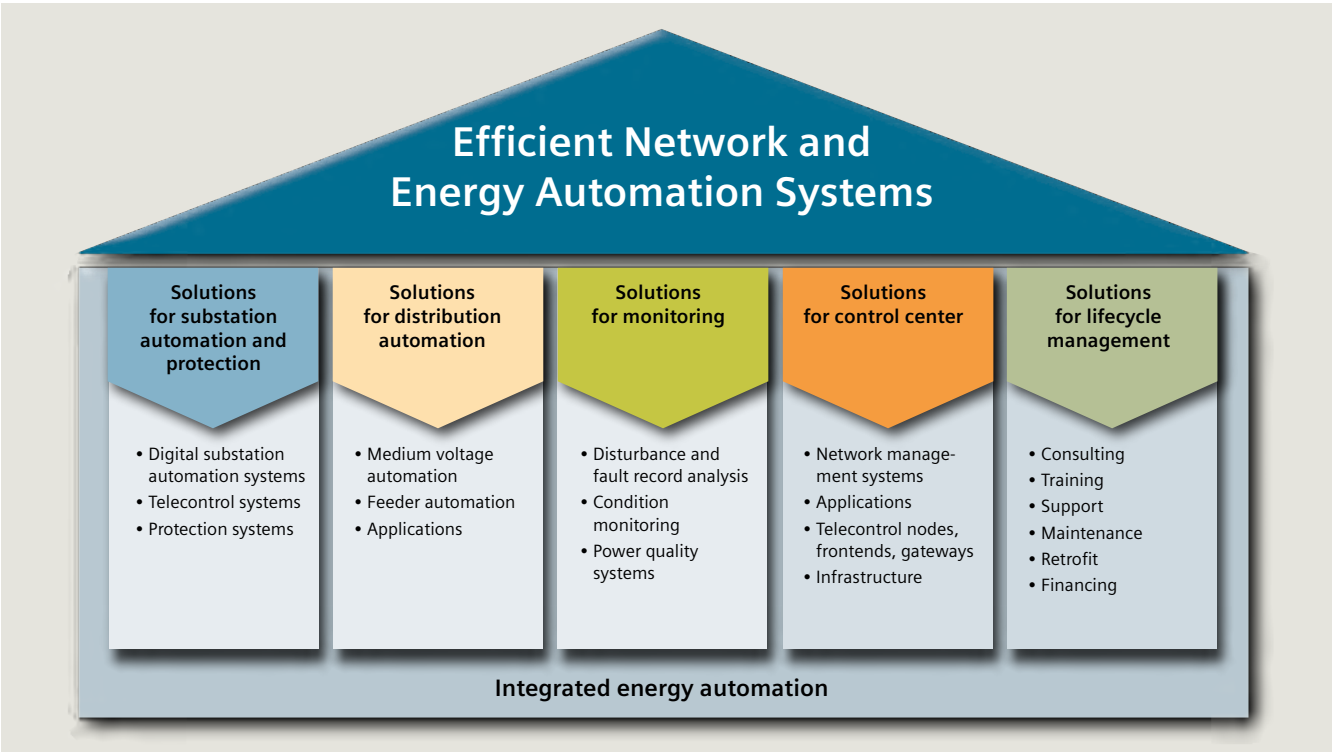

Fig. 6.6-1: System solutions portfolio for pathbreaking energy automation

Energy automation system landscape

Efficient network and energy automation system solutions cover all areas of energy automation throughout the entire lifecycle of a power grid, while also taking the growing importance of Smart Grids into consideration (fig. 6.6-1, see page before). Every individual component of an energy automation network should be optimized to coordinate with each other. Furthermore, the topics cyber security, engineering and communication must be handled for all the components in a homogeneous and consistent way. The energy automation system landscape consists of the following main parts:

- Solutions for substation automation and protection
- Solutions for distribution automation (primary and secondary distribution)
- Solutions for monitoring (monitoring of primary and secondary equipment and operation supporting systems)
- Solutions for control center
- Solutions for lifecycle management (service and maintenance, consulting and training).

Efficient engineering for less complexity and more investment protection

In the field of systems engineering, the demand for new and highly efficient engineering solutions is becoming more insistent, not least because of the continuing integration of different subsystems and the resulting growth of the data volume in a wide variety of data models. Efficient engineering is characterized by its simple, straightforward operability. It offers users optimal support for creating and maintaining their system configuration and project planning data, based on international standards. Integrated energy automation guarantees the harmonized, optimized management of the project planning data thanks to migration-capable data structures and uniform, standardized data models such as IEC 61850. The tool landscape has to be optimized to an engineering process with existing or given database.

6.6.1 Solutions for substation automation and protection

Introduction

New challenges and dynamic market developments

Today, network operators and energy suppliers are confronted with steadily mounting challenges. Through energy efficiency and emission reduction requirements, legislators and regulatory agencies are exerting more and more influence on operating parameters. In addition, intelligent networks are emerging that require entirely new approaches to energy automation. The burgeoning number of distributed renewable energy generators is causing a bidirectional load flow and, in the foreseeable future, demand response will replace load-oriented power generation. But intelligent applications can be used to full advantage only if standardized communication and interfaces are in place. The use of networks and TCP/IP is making cyber security a priority topic as well. With appropriate solutions, these challenges can be transformed into opportunities and competitive advantages. And that is exactly the goal driving the development of efficient network and energy automation solutions from Siemens.

Always one step ahead with efficient network and energy automation solutions from Siemens

Comprehensive and efficient overall solutions for all areas of energy automation based on time-tested Siemens products – this is the idea behind Siemens efficient network and energy automation systems. This integrated concept offers compelling benefits in all areas:

- Efficiency thanks to low costs throughout the entire lifecycle
- Sustainability through extensive performance reserves and open interfaces
- An ideal technical basis for the intelligent grids of the future
- The high level of safety only a demonstrably dependable business partner can guarantee.

Ready for Smart Grids

Efficient network and energy automation solutions are an important element in the establishment of intelligent power grids with automated functions, distributed applications, and interlinked communication for the monitoring and optimization of network components. These intelligent grids meet societal and regulatory demands for highly efficient, environmentally sustainable network infrastructures. They also allow the optimization of work processes, enable more efficient operation management, and ensure a higher degree of supply security.

For further information please visit:
siemens.com/eneas

Use synergies and save costs

System solutions for substation automation technology and telecontrol systems form the basis for automation, metering, and power quality. They make it possible for plant operators to benefit from many synergistic effects when it comes to both investment and operation. They are especially effective in conjunction with other efficient network and energy automation solutions. The resulting synergies save time and costs, for example, when creating communication links among distributed components. Consistent workflow and ongoing data exchange across all areas of energy and network automation provide a solid foundation for intelligent networks, and are also the keys to ensuring reliable, economical operation of transmission and distribution networks in an increasingly competitive market.

Overview

Intelligent substation automation on a consistent basis

Siemens' efficient network and energy automation solutions for substation automation and protection incorporate a complete range of proven concepts for all substation automation tasks at all voltage levels and for all types of substations:

- Decentralized substation automation based on distributed bay units
- Compact systems for ring-main units and pole-mounted switches, for efficient network monitoring, troubleshooting, and fault correction
- Central telecontrol systems with integrated automation and node functions
- Multifunctional protection systems for the coordination and interaction of different protection devices.

Knowledge as a factor of success

The most important factor in successful substation automation and network operation improvement is the rapid availability of the right information. As the market leader in energy automation, Siemens is spearheading the development. The Siemens specialists have hands-on experience with the world's largest installed base, and play a major part in driving technological development. Siemens' leading role in the development and implementation of the IEC 61850 communication standard is just one of many recent examples.

An example of technology leadership in action: IEC 61850

Siemens was the world's first company to commit to full implementation of the IEC 61850 standard. The object-oriented structure of this standard includes protection and control, and it makes the operational management of substations significantly more efficient. IEC 61850 supports the interoperability and integration capability of substation automation systems, facilitates vendor independent substation engineering, and reduces planning effort at the same time. The first plant using this standard commenced operation in 2004, and over 2,000 IEC 61850-compliant systems with over 120,000 devices have gone into operation since that time.

Experience and technology leadership

Today, Siemens is one of the world's leading companies in energy automation – due in no small measure to the company's extraordinarily long practical experience in this field. Siemens has been working in protection technology for over 100 years, and for some 70 years in substation automation and telecontrol technology. Siemens has repeatedly set new benchmarks in energy automation. The introduction of the analog protection relay in 1957, or the first digital substation automation system in 1987, are just two striking examples. Today, over 5,000 Siemens digital substation automation systems are in operation around the world, along with over 100,000 telecontrol systems and over a million digital protection devices.

Traditional T&D business

Digital substation automation systems

The integrated concept of the efficient network and energy automation solutions covers the entire spectrum of substation automation. It can be adapted to any existing infrastructure, and special configurations can be developed for individual customer requirements. In addition, for many of the most widespread applications, Siemens offers generic solutions that are preconfigured, and therefore especially economical. The extensive range of available applications allows intelligent, environmentally sustainable, reliable, and highly economical network operation. Efficient network and energy automation solutions provide efficient, reliable digital substation automation technology everywhere – in transmission and distribution networks as well as in municipal utilities, combined systems, and industry. The digital automation of substations is based on distributed devices, and it provides a wide range of functions for data acquisition, control and monitoring, as well as for protection and communication. Efficient network and energy automation solutions are composed of Siemens components and products that from the start are coordinated to work together perfectly – especially the devices in the SIPROTEC, SICAM and SIMEAS product families. Third-party components that may be needed are qualified in system testing (fig. 6.6-2).

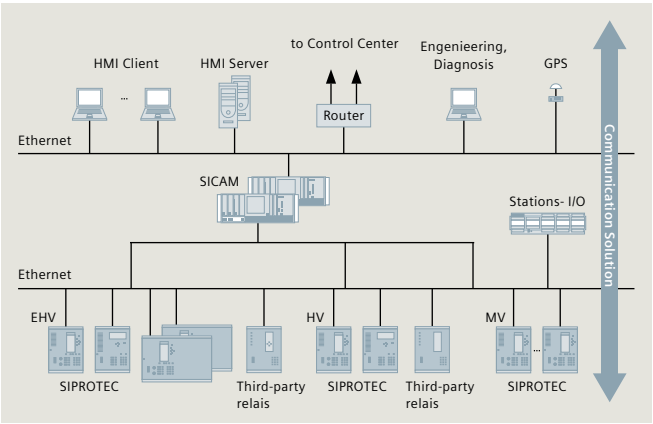

Fig. 6.6-2: Efficient network and energy automation solution for transmission substation

Telecontrol systems

Telecontrol systems designed as efficient network and energy automation solutions provide multi-hierarchical monitoring and remote control, as well as automation functions at all levels. The modular system can be adapted to any primary processes and their spatial distribution. System solutions are available for both energy transmission and distribution to optimally perform telecontrol tasks for all aspects of data acquisition and process interfacing, communication, data concentration, and automation. From small substations using terminal block technology to large telecontrol stations with high signal density and numerous interfaces, efficient network and energy automation covers the entire spectrum. Its modular structure ensures long-term expandability. All components are based on a shared system architecture and technology so that entire systems can be parameterized with a common tool throughout all project phases. Data point entry on individual devices is a thing of the past, and multiple entries are effectively prevented, even in mixed systems. All components deployed in efficient network and energy automation telecontrol systems utilize the same communication functions, so that the available protocols are usable in all telecontrol components. Along with the IEC 60870-5 series and IEC 61850 standard protocols, DNP 3.0 and Modbus are also available for all applications. In addition to these standards, numerous proprietary protocols for components by other manufacturers are also supported. The modular concept, distributed architecture, and evolutionary development principle ensure that these systems have long life expectancy and are open for future developments, thus providing a high degree of investment safety and enabling the creation of Smart Grids (fig. 6.6-3).

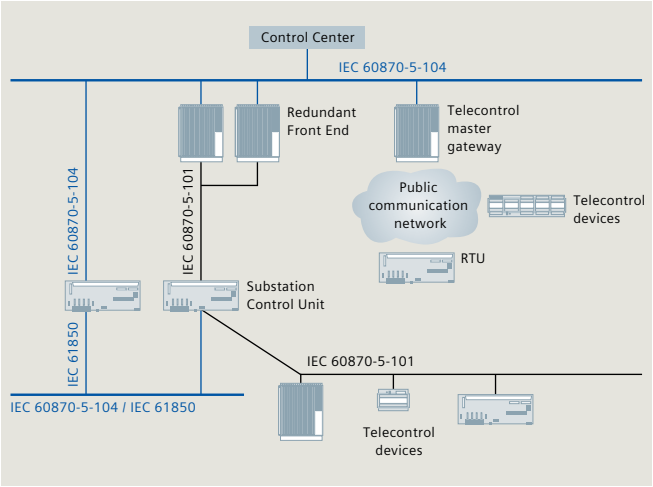

Fig. 6.6-3: Typical multi-hierarchy telecontrol system

Protection systems

Reliable, efficient, adaptable substation protection systems are crucial for high- and medium-voltage power supply operations. They must react to faults in milliseconds in order to prevent damage to costly equipment such as switchgear, transformers and cables, ensure a high level of safety, and avoid failures of supply. Efficient network and energy automation solutions for protection systems ensure a reliable, efficient power supply. They are designed to allow selective procedures for different network structures and changes in operational processes, and they provide much more than just the dependable fulfillment of the basic functions of protection, control and monitoring. Efficient network and energy automation solutions incorporate innovative approaches such as harmonized interfaces and interoperability, multi-layered safety mechanisms, and efficient engineering. Intelligent functions form one of the key prerequisites for Smart Grids. Efficient network and energy automation protection systems support network operation during fault tracking or power quality analysis, adding useful features to the proven benefits of older protection systems. Efficient network and energy automation solutions for protection systems allow individual protection devices to work together perfectly using the powerful communication technologies available today.

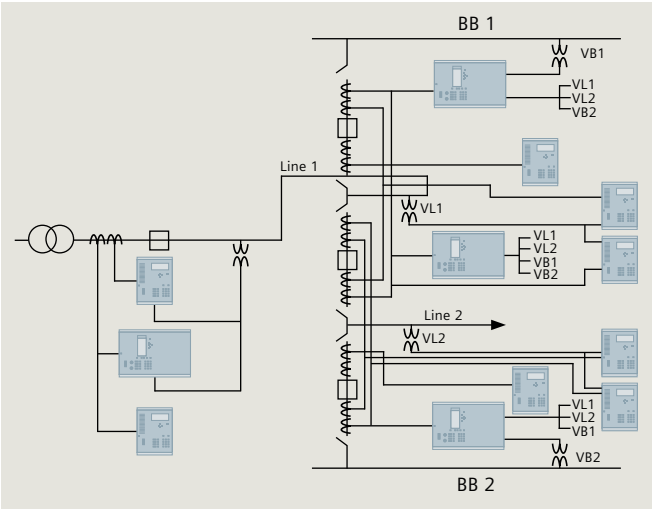

Fig. 6.6-4: Example of a protection system for one-breaker-and-a-half scheme

Examples are, among others, the complex protection requirements of one-breaker-and-a-half schemes or automatic load shedding between power plants in industrial networks (fig. 6.6-4).

Efficient network and energy automation generic solutions

Siemens generic solutions are "out of the box" solutions – the effective, comprehensive and modern total system answer for turnkey substation automation. They comprise pre-engineered and universally applicable components for substation layouts at various voltage levels – precisely tailored for a range of selected applications.

Siemens generic solutions, all based on field proven engineering concepts, allow reduced project times, offer a high degree of economic efficiency, and afford the reliability of both the tried and proven Siemens solutions and products.

Benefits

Quality
- Multiple tested applications and templates provide improved quality to projects
- Increased quality of proposals
- More transparency of proposed services
- Improved quality of project documentation
- Improved quality of hotline and after-sales services.

Security
- Easier to adapt and enhance the system even after commissioning
- Safe operation from the user interface to the command output
- Secure maintenance: standardized documentation
- Secure lifetime support: long-term maintenance because of large installed base
- Security of investment: migration strategies thanks to a wide installed base.

Speed
- Faster project delivery
- Reduced effort in the definition of requirement and detail clarifications
- Faster project documentation
- Faster service and support-based on known project design (fig. 6.6-5).

Efficient network and energy automation generic solutions for MV

Generic solutions for medium voltage are a set of modules for all typical substation automation purposes within the medium-voltage distribution grid for
- Air-insulated switchgear (carriage type)
- Gas-insulated switchgear
- Single busbar
- Double busbar (fig. 6.6-6).

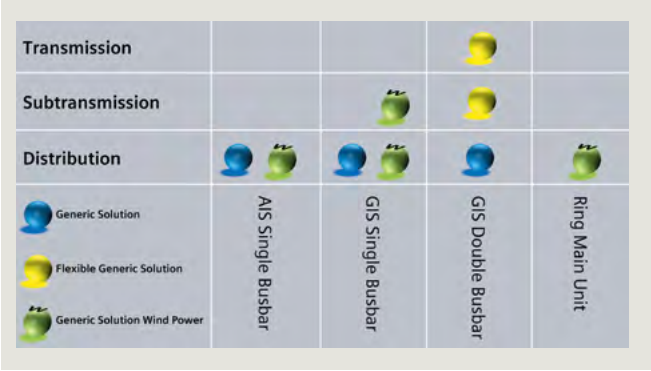

Fig. 6.6-5: Generic solutions landscape

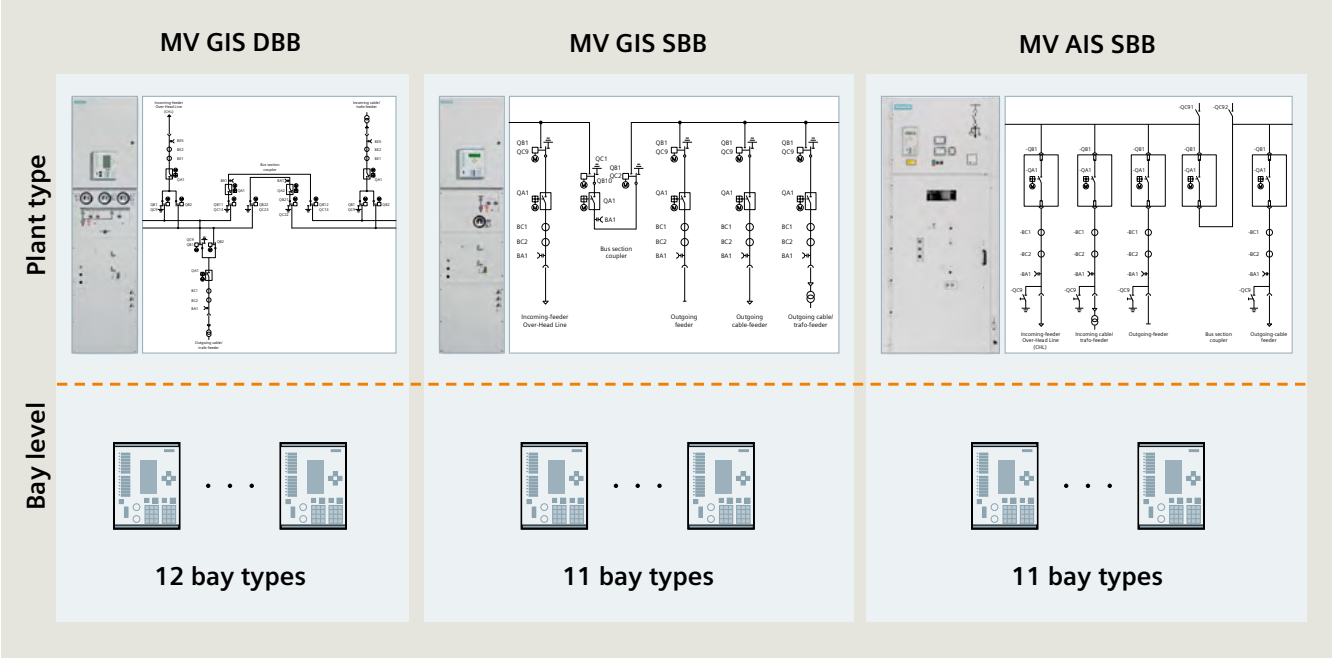

Fig. 6.6-6: Generic solutions for MV plant types

The set of modules has been specially designed to provide off-the-shelf solutions for medium-voltage switchgear, and are applicable for greenfield projects as well as for refurbishment. Suitable for all market sectors such as utilities, industry and infrastructure, as well as for all MV plant types, generic solutions for medium voltage considerably reduce planning and engineering efforts, increase the overall project quality and transparency, and speed up project planning and implementation.

Based on Siemens' long-standing experience in automation of distribution substations of all sizes and configurations, generic solutions for medium voltage offers a set of pre-engineered, universally applicable solutions for substation automation and protection that cover all types of medium-voltage switchgear. All system solutions are precisely tailored for a range of selected applications, and include the entire documentation in a standardized and pre-prepared format. On the bottom line, they make possible faster returns through reduced project times and faster project implementation, and they ensure long-term reliable operation and economic efficiency (table 6.6-1).

Geared towards state-of-the-art digital substation automation, Siemens generic solutions for medium voltage are a comprehensive set of modules comprising tried and tested solutions for substation automation in distribution grid applications (fig. 6.6-7).

No.	Type
Incoming feeder	
1.0	Incoming feeder
1.1	Incoming cable feeder
1.2	Incoming cable feeder with remote transformer
1.3	Incoming feeder with overhead line
Outgoing feeder	
2.0	Outgoing feeder
2.1	Outgoing cable feeder
2.2	Outgoing cable feeder with remote transformer
2.3	Transformer feeder MV / MV
2.4	Transformer feeder MV / LV
Coupler	
3.1	Bus coupler
3.2	Bus sectionalizer
Central	
4.1	Station typical for central IO

Table. 6.6-1: Defined bay typicals – example for gas-insulated double-busbar switchgear

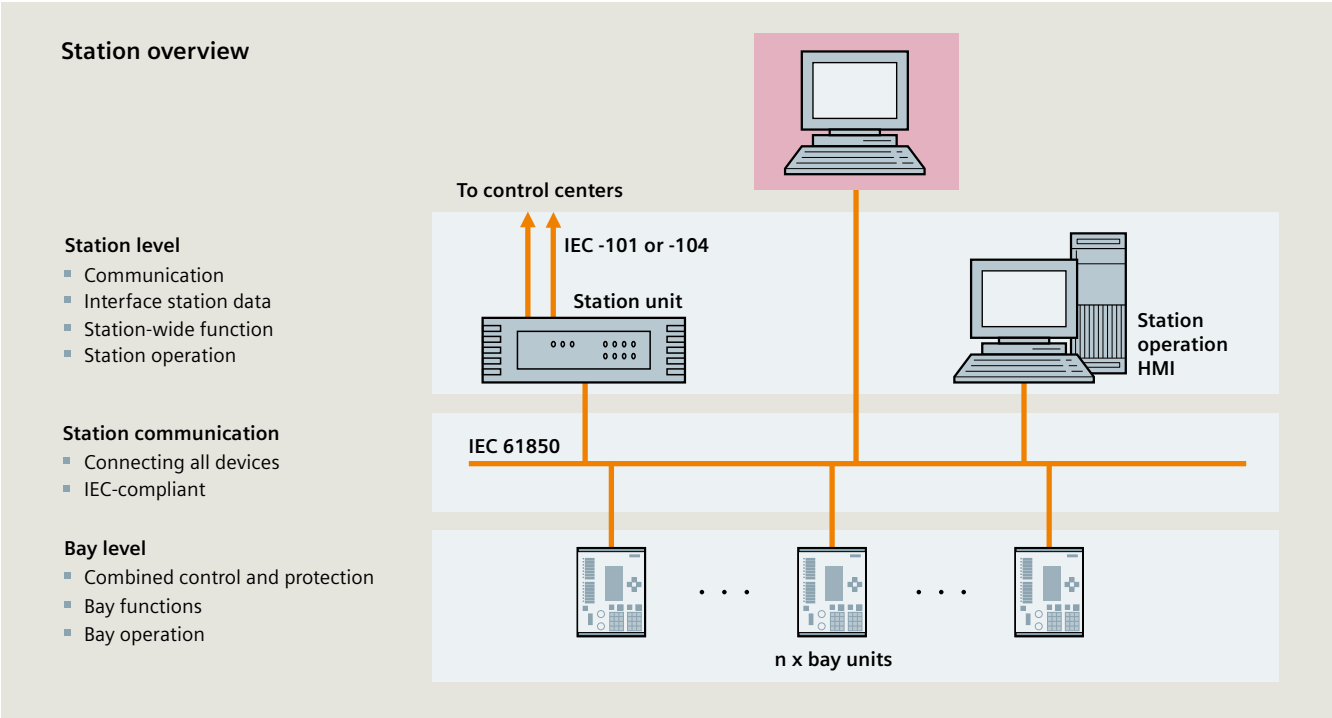

Fig. 6.6-7: Generic solutions for MV plant types

Efficient network and energy automation solutions for wind power

Efficient network and energy automation solutions for wind power are a set of modules for all typical substation automation purposes within the power collection grid of all levels of a wind power plant power collection grid. The set of modules has been specially designed to provide off-the-shelf solutions for wind power purposes, and are applicable to onshore and offshore wind power projects of all sizes. Efficient network and energy automation solutions for wind power considerably reduce planning and engineering efforts, increase the overall project quality and transparency, and speed up project planning and implementation (fig. 6.6-8).

Based on Siemens' long-standing experience in substation automation of wind power plants of all sizes, efficient network and energy automation solutions for wind power comprise a set of pre-engineered, universally applicable solutions for substation automation and protection that cover wind turbine tower switchgear as well as medium-voltage and high-voltage switchgear. All system solutions are precisely tailored for a range of selected applications, and include the entire documentation in a standardized and pre-prepared format. On the bottom line, they make possible faster returns through reduced project times and faster project implementation, and they ensure long-term reliable operation and economic efficiency (fig. 6.6-9).

Geared towards state-of-the-art digital substation automation, Siemens efficient network and energy automation solutions for wind power are a comprehensive set of modules comprising tried and tested solutions for substation automation in power collection grid applications. This modular kit covers the entire range of types and sizes of wind power plants – from a single turbine to large-scale wind farms (fig. 6.6-10).

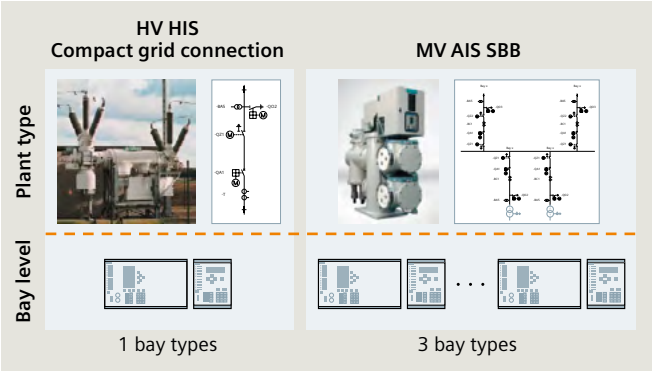

Fig. 6.6-8: Efficient network and energy automation solutions for wind power: HV plant types

Fig. 6.6-9: Efficient network and energy automation solutions for wind power

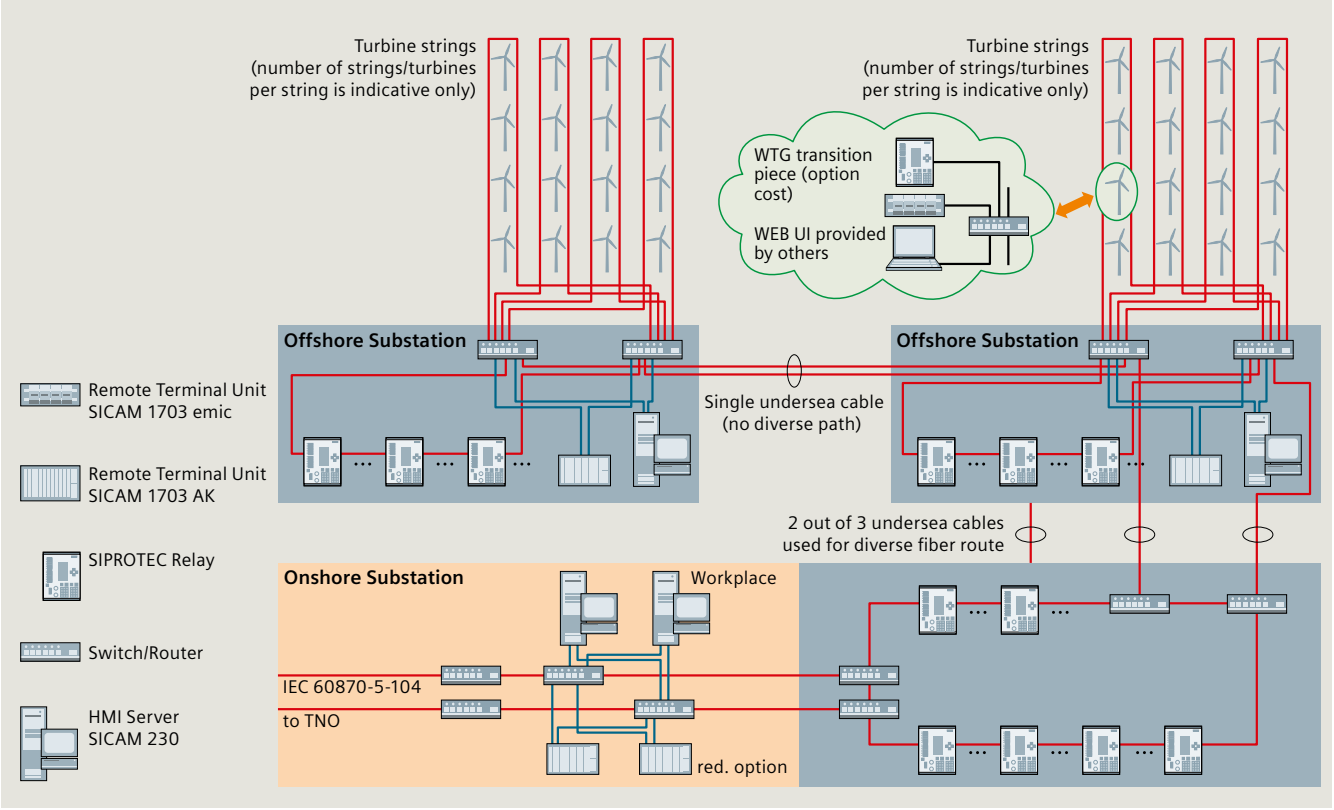

Fig. 6.6-10: Example for automation of the power collection grid with efficient network and energy automation solutions for wind power

Efficient network and energy automation solutions SIPROTEC 5 HV

Efficient network and energy automation solutions using the new generation of protection devices and bay controllers SIPROTEC 5 for high voltage (GS SIP5 HV) are a set of modules for basic typical substation automation purposes within the high-voltage transmission grid for

- Gas-insulated switchgear
- Double-busbar systems (fig. 6.6-11).

The set of the three base modules has been specially designed to provide SIPROTEC 5 devices for off-the-shelf solutions for high-voltage switchgear.

This generic solution covers the most common substation typicals in 380 kV. It shows new features and solutions to find a cost-efficient, secure and future-proof solution. Furthermore, the generic solution shows different approaches of communication architectures to find the best configuration for the system operator's requirements. The generic solution contains functional and non-functional features concerning a state-of-the-art substation automation system.

It supports and uses the following new SIPROTEC 5 system features:

- Direct tripping without external trip relays
- Synchrocheck with multiple voltage sources
- Flexible configuration of the device function
- Test disconnect terminal UTME 6-MP and test plug SMP
- User-friendly position of the device
- Migration of legacy systems.

Migration of legacy systems

The product lifecycles of primary and secondary equipment differ substantially:

Primary equipment: 30 ... 45 years
Secondary equipment: 15 ... 20 years

One lifecycle for primary equipment may include 2 ... 3 lifecycles for the secondary equipment.
However, a system including both primary and secondary equipment is unlikely to be modified, as long as its components function properly (fig. 6.6-12).

Product lifecycle and its impact:

- Components, operating systems, application software is available on the market for a limited time only
- Suppliers cannot deliver and maintain products and tools for an indefinite period
- No new systems can be implemented after phase-out declaration
- Siemens' obligations for repair, replacement and maintenance cease typically 10 years after product cancellation (fig. 6.6-13).

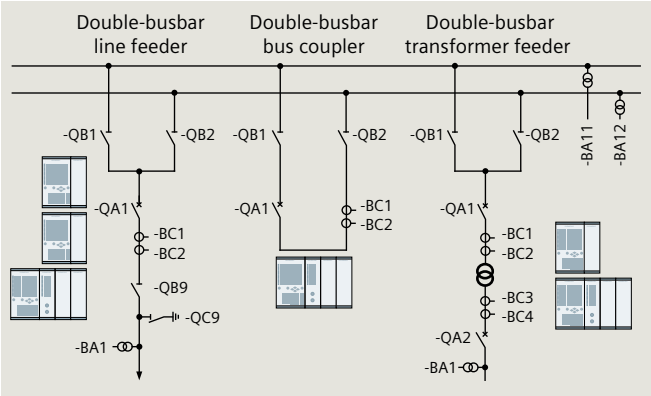

Fig. 6.6-11: Efficient network and energy automation solution Siprotec 5 HV – bay typicals

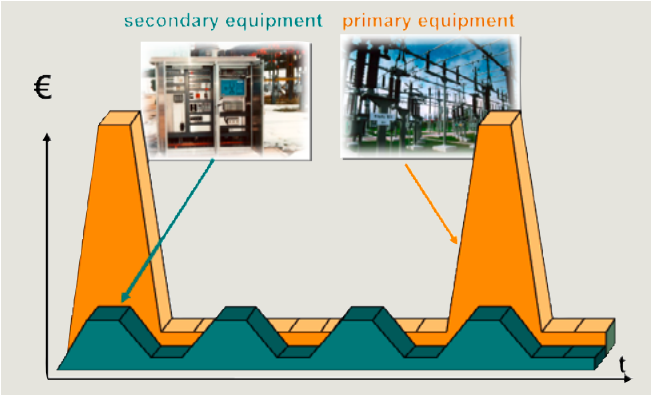

Fig. 6.6-12: Efficient network and energy automation system migration: different life and investment cycles for primary and secondary equipment

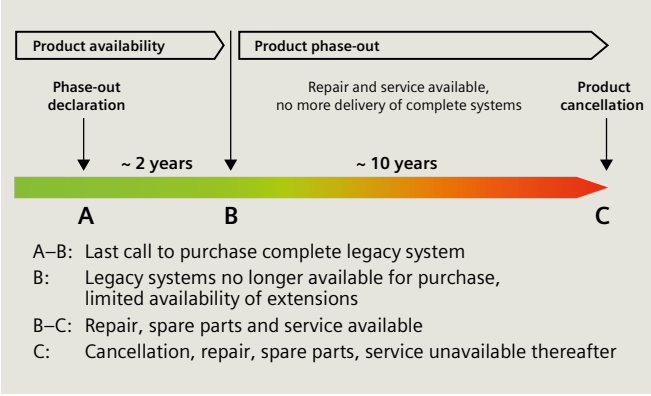

Fig. 6.6-13: Efficient network and energy automation system migration: typical Siemens' obligations for repair, replacement and maintenance for substation automation equipment

POWEREN.IR

To avoid faults or breakdowns, a proactive planning and timely execution of migrations is essential:

- Protection of existing investment – only such components are being replaced, for which an immediate need exists
- Minimization of the effort to renew or modify existing wiring or communication lines
- Retention of the original functionality with respect to protection, interlocking, switching sequences, automation functions, etc.
- Preparation of the systems for new functionalities and future requirements
- Re-use of engineering data, parameter settings and configuration data, wherever possible
- Reduced, partial or even no outage times
- Reliable and trouble-free execution of the migration
- Distribution of the migration activities and the associated cost over a certain period of time
- Simple and step-by-step readjustment and familiarization for the operating staff to the new solution.

The efficient network and energy automation system migration concept and approach for the legacy systems takes all the relevant aspects for a smooth migration from the legacy systems:

- LSA 676 (substation automation system)
- SINAUT LSA (substation automation system)
- 8TK (substation interlocking system)
- SICAM SAS (substation automation system) to the actual and future-proof system out of the SIEMENS substation automation portfolio.

Especially the following requirements are solved by the efficient network and energy automation system migration approach:

- Parallel operation of legacy system and target system components during migration, possibly with fallback solution
- Deployment of dismantled material as spare parts or for extensions in other parts of the system
- Look and feel of the target system resembles the legacy systems regarding user interface and operation
- Many legacy protocols, including those proprietary to Siemens, are being supported by the target systems
- A variety of conversion tools and procedures for parameter and configuration data is available
- In-house know-how within Siemens facilitates tailored migration solutions
- All components required to implement the migration solution can be provided by Siemens from one single source
- Migration steps and procedures can be tested in the Siemens lab, and in many cases offline on the live system
- Training of the operating personnel on-the-job in synchronization with the migration.

6.6.2 Solutions for distribution automation

Distribution automation

Distribution automation is the complete automation of all controllable equipment and functions in the distribution power system. Main tasks are the operation and maintenance of distribution system facilities to improve the quality of service, reduce the operating costs, increase the efficient use of energy, and fast adaption to the changing energy environment. Distribution automation also includes newer applications such as fault detection, fault location analysis, voltage control, and power quality measurements.

Medium- and low-voltage automation

Medium- and low-voltage solutions for distribution automation guarantee the cost-optimized operation and maintenance of primary equipment, increased supply safety and voltage quality, and a rapid adjustment to changes in the distribution network.

A major requirement on electricity supply systems is a high supply reliability for the customer which is mainly determined by the distribution network. Supply reliability is influenced by various technical and organizational factors, and typically quantified by criteria such as SAIDI and SAIFI. In general, customer expectations on supply reliability are steadily increasing. In some cases, explicit power quality criteria are even included in negotiated contracts between customers and utilities. Moreover, in liberalized markets, regulators typically require the utilities to report on the reliability performance, or define explicit performance targets that are even penalized in case of violations in several countries.

Given this background, the power quality performance of distribution networks is coming more and more into the focus of system operators. Cost-efficient measures and concepts for system development and operation are necessary. Performance targets demanded by customers and regulators are becoming a key factor for economic system operation. Understanding the correlations between the respective measures and their detailed and quantitative impact on the systems reliability performance is therefore becoming more and more important.

Benefits of medium- and low-voltage automation:
- Increase of distribution reliability
- Improvement of distribution operations and maintenance
- Faster disturbance analysis and fault location
- Asset monitoring for aging infrastructure and avoidance of asset overload
- Increase of distribution power quality to be in line with given voltage range, and avoidance of power quality issues for medium-sized industry
- Leverage of medium-sized distributed generation and small decentralized generation
- Clear view about power flow
- Active load balancing and rearrangement in distribution network for operational issues
- Utilization of up-to-date technology like communication node with broadband infrastructure.

Portfolio:
- Medium- and low-voltage automation
- Self-healing applications and wide area monitoring.

Monitoring, remote control, and self-healing application

High supply reliability for the customer – a major requirement for electricity supply systems – is mainly determined by the distribution networks, which typically feature a low degree of automation only. Even the automation of a smaller part of the network with monitoring, remote control, and self-healing application can realize significant improvements. Intelligent automation equipment in primary and secondary substations allows for effective monitoring and decision-making without human intervention. Reliability of energy supply primarily depends on the distribution network, and its importance is growing. It is generally quantified by two indicators: SAIDI (non-availability) and SAIFI (interruption frequency).

Scalable distribution automation solutions start with simple monitoring and control of distribution substations, and end with closed-loop self-healing (Fault Location Isolation and Service Restoration). In cable networks, mainly RTUs and short-circuit detectors are used for the automation of ring-main units. For overhead-line networks, IEDs and protection relays ensure control and monitoring of reclosers and sectionalizers. Self-healing automation can provide secure and reliable operation of overhead lines and cable networks, and can be used for all types of primary equipment: circuit-breakers, reclosers, disconnectors and switches.

Principle of self-healing (Fault Location, Isolation and Service Restoration – FLISR):
- **Fault location**: Analysis and detection of permanent faults, broken jumpers, loss of substation source, and lockout due to miscoordinated protective devices.
- **Fault isolation**: The distribution network is broken into feeder section zones that can be isolated or energized from one or more sources using fault-interrupting or switching devices (i.e., circuit-breaker, recloser, load breaker, etc.). Evaluation to determine if any unfaulted zones are de-energized.
- **Service restoration:** Automatic restoring of unfaulted zones using alternative sources (if available). Change of settings groups to better coordinate the protective devices in the new network topology. Restoration of upstream zones that were de-energized due to miscoordination of the protective devices.
- **Return to initial conditions:** On the operator's request.

Distribution automation architectures

- **Centralized:** Automation logic is implemented in the control center
- **Semi-decentralized:** Automation logic is implemented at the primary substation level
- **Decentralized:** Automation logic is implemented at RMU / feeder level (fig. 6.6-14).

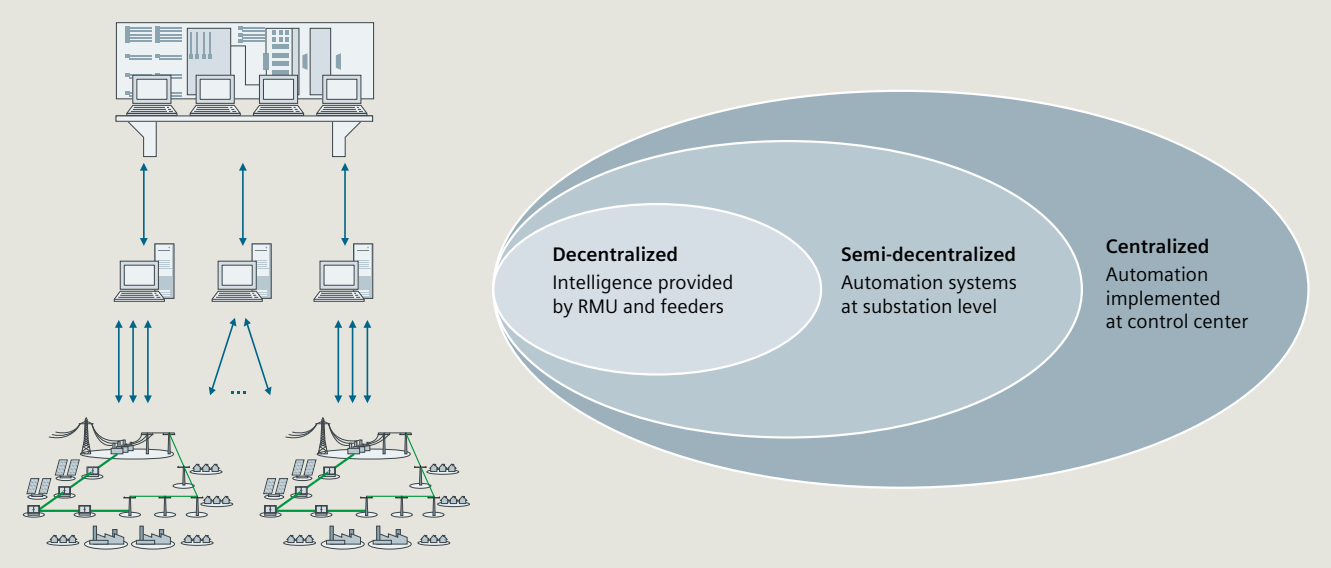

Fig. 6.6-14: Semi-decentralized architecture

Semi-decentralized automation architecture

The regional controller based on the SICAM substation automation system ensures local self-healing automation, and also provides additional supervisory information. It is located in the primary substation as a link between the central SCADA system and the intelligent field devices. Protection relays like SIPROTEC monitor and protect distribution feeders in the primary substation. Disconnectors and switches at the ring-main units can be controlled and monitored via a customized distribution automation box including SICAM RTUs and SICAM FCM.

Standard ANSI protection functions in the SIPROTEC relay handle critical fault situations by tripping circuit-breakers at the infeed point. The distribution automation box sends the status of the distribution network to the regional controller for analysis and for taking further actions.

The regional controller is set up to:

- Detect fault location using fault indications from the field
- Manage standardized switching sequences for fault isolation
- Handle further actions for reconfiguration and service restoration (fig. 6.6-15).

Decentralized automation architecture

The system is designed to work using independent automated devices. The self-healing logic resides in individual SIPROTEC 7SC80 feeder automation controllers located in the feeder level. Each feeder section contains a SIPROTEC 7SC80 with a powerful programmable logic controller (PLC) that can be easily configured by the utility to operate the switching devices in response to local or network conditions. Because the relays communicate with each other in a peer-to-peer fashion, the system operates autonomously with no need for a master controller.

Modern communication systems primarily use the open IEC 61850 standard to support this decentralized application. IEC 61850 provides the required logic and flexibility for the realization of the self-healing functionality. Peer-to-peer functionality via IEC 61850 Generic Object Oriented Substation Events (GOOSE) messages not only provides binary data, but also analog values. Each SIPROTEC 7SC80 unit contains extensive programmable logic, which is designed with the Feeder Automation Sequence Editor (FASE) engineering tool to realize the automation functionalities. The IEDs then handle the self-healing functionality, attempting to clear and isolate the faults in order to initiate the service restoration logic (fig. 6.6-16).

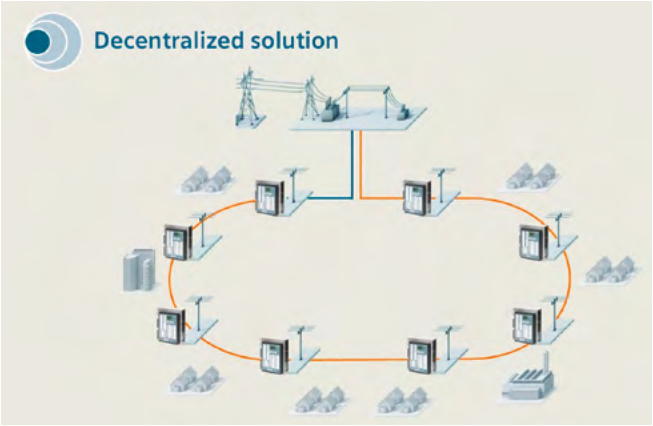

Fig. 6.6-15: Decentralized architecture

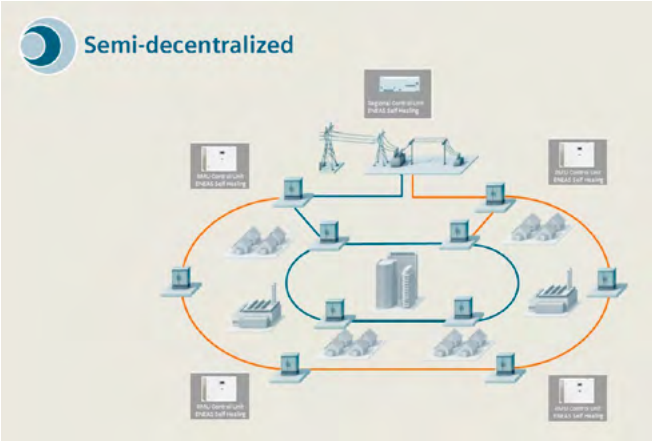

Fig. 6.6-16: Semi-decentralized architecture

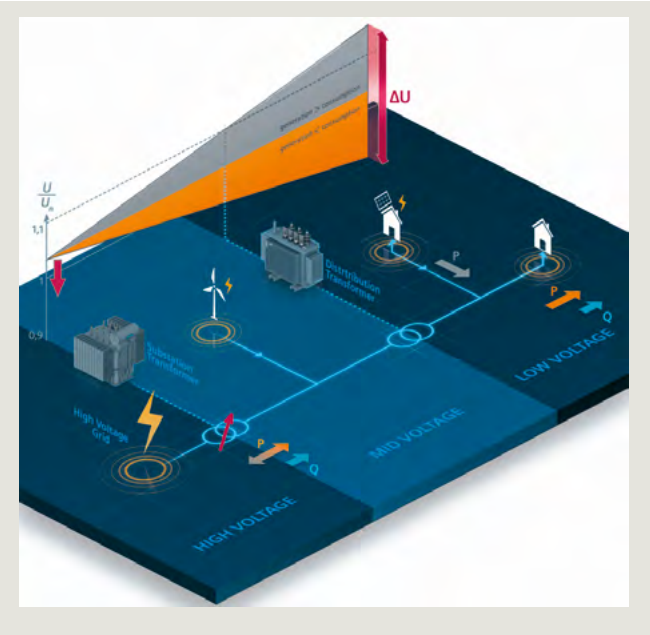

Fig. 6.6-17: Secure voltage level based on distributed voltage measurement in the medium-voltage grid and low-voltage grid

Wide area monitoring application

In many cases, explicit power quality criteria are even being included in contracts between customers and utilities. Moreover, regulators in liberalized markets are requiring that utilities document network reliability, or they define explicit performance targets. Many countries even impose penalties for non-compliance. This being the case, power quality is becoming more and more of a focus. Operators are requiring suitable measures that allow them to acquire information from the distribution network at any time, and thus to control the distribution network more efficiently.

The regional controller based on the SICAM substation automation system ensures intelligent concepts for voltage regulation, and can help achieve the defined performance goals of a defined network area. The regional controller makes them a key factor in supplying energy cost-efficiently and reducing investments in new lines. Knowing which measures supply which measurable added value for network operation is becoming increasingly important.

System solutions from Siemens take all these topics into account and provide a secure voltage level. The primary transformer or a line voltage regulator will receive their tap changes from the wide area monitoring application of regional controller, on the basis of the distributed voltage measurement in the medium-voltage grid and low-voltage grid (fig. 6.6-17).

6.6.3 Solutions for industry grids

Industry solutions

Every industrial process relies on an adequate supply of electrical power. In large industrial plants, power is usually supplied via the company's own grid. Such industry grids feature integrated electricity generation with on-site generator sets that can supply at least a large part of the energy required for production.

Industry grids are typically connected to a power utility's external grid, but can also be operated in island mode. Several are designed as dedicated island grids – especially in the oil and gas industry, in remote regions, and in offshore locations.

Efficient network and energy automation solutions for industry cover the whole range of energy automation for industry grids: Monitoring, control, protection, and power management are supporting the efficient grid operation, and cater for high reliability and quality of power supply for industrial production processes.

The base for efficient network and energy automation solutions for industry is the substation automation system: Proven components of the product families SICAM and SIPROTEC are connected with network communication based on IEC 61850 and distributed functions. They also cater for interfaces to external devices, such as LV feeders or the process control center (DCS).

Typically, efficient network and energy automation solutions for industry are based on a 3-level configuration consisting of

- Feeder level
- Station level
- Plant level.

More details of substation automation and protection are given in chapter 6.6.1.

Power management

Reliable power supply and stability of the power grid are essential for an efficient industrial production. These requirements are met by power management. The functions cater for stable frequency and voltage, keep power import within desired range according to load agreements with the external power supplier, protect primary equipment from overloading, and provide secure power supply even in critical situations (fig. 6.6-18).

Automatic load shedding

In case of overload, the automatic load shedding stabilizes the power supply of industrial plants through the prioritized disconnection of consumers, thereby ensuring that core processes remain under power in critical situations and expensive downtimes are avoided. Load shedding is especially important when critical events, such as the tripping of a generator, endanger the grid stability. In such situations, low priority consumers are disconnected to restore the balance between energy generation and consumption.

Load shedding includes 3 different functional versions, which can be combined according to the operational needs of the grid, and which complement each other for a comprehensive and selective reaction (fig. 6.6-19).

Fast power-based load shedding

Power-based load shedding continously calculates the necessary reactions to critical scenarios that could occur in the grid in advance. Therefore it is always prepared for such contingencies in a predictive way, and takes into account the actual distribution of power.

For every contingency, load shedding calculates how much power has to be shed, and which feeders are to be tripped according to their predefined priority. By this method, load shedding sheds only as much load as necessary for restoring the nominal frequency.

The predictive calculation enables a very fast reaction when a contingency occurs. Critical trigger events are transmitted to all feeder devices over Ethernet using IEC 61850 with GOOSE messages. This method is more reliable and economic than traditional parallel wiring, and caters for reaction times below 70 ms.

Dynamic power-based load shedding

Loads change as needed by the industrial production process. In island mode, these variations are balanced by the on-site turbines. As the need for power increases, the spinning reserve of the generators decreases, reducing the flexibility of the operator for starting additional big loads. Such a situation will still maintain balanced load and generation, and frequency will be stable; therefore, fast reaction is not necessary. On the contrary, it is required that dynamic load shedding includes a time delay avoiding too sensitive shedding activity.

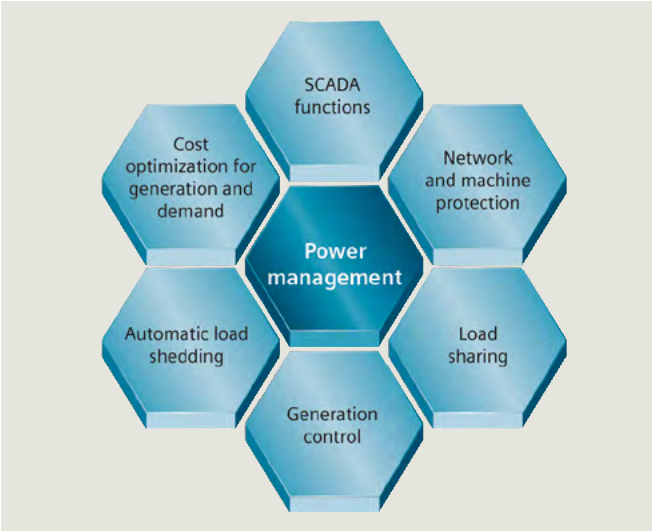

Fig. 6.6-18: Functions of power management

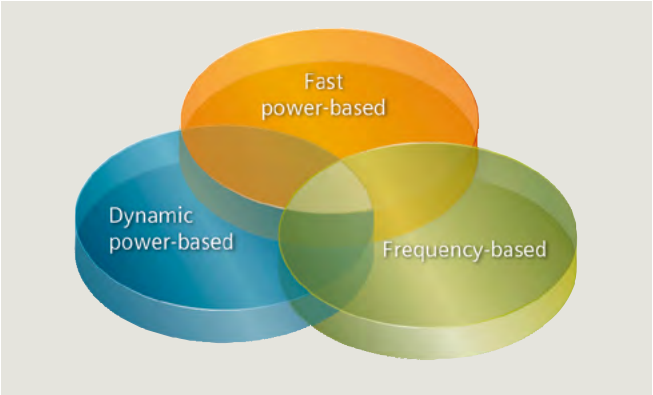

Fig. 6.6-19: Principles for load shedding

Dynamic load shedding monitors the spinning reserve for a defined limit. By shedding low priority loads, the required reserve is restored. Dynamic load shedding includes supervision of gradual overload. This means that generators may be overloaded for a limited time and with limited value. As long as these limits are not exceeded, shedding will not be activated.

As an alternative to shedding, the start of big loads can be inhibited if the spinning reserve is not sufficient.

Frequency-based load shedding

This function reacts to a violation of a defined set of under-frequency limits. For every limit it can be defined which feeders have to trip in order to restore the nominal frequency. The assignment of feeders to the limits is stored in the bay devices; therefore, they react independently of the central load shedding controller. The operator has full overview and control of the assignments on the HMI.

Frequency-based load shedding is often used as a backup function to the fast load shedding, because of this high availability, but it can be also used as an independent main function for smaller applications.

Generation control

Industry grids are often supported by several generators to support island mode in case of a fault of the intertie to the external utility. Beyond that, these generators are used to reduce energy production costs and improve the security of supply. In industry grids, there are mainly gas turbines, steam turbines, and diesel engines to drive the generators. They all are typically equipped with their own primary controllers: the governor and the excitation with voltage control.

If several generators operate jointly in an islanded industry grid, they need to be coordinated to maintain nominal frequency and voltage. This is the task of a secondary control, which is the main part of generation control (fig. 6.6-20).

Generation control supports the grid operator in all modes:

- In connected mode it keeps power import and phase angle within contractual limits by controlling own production
- In island mode it stabilizes frequency and voltage in the grid.

In all modes, generation control shares the produced power between the running generators to maximize the spinning reserve (fig. 6.6-21).

Generation control runs on a central server, based on SICAM 230, and needs distributed controllers at each generator set to exchange the necessary data. Typically, there is a mix of serial and parallel interfaces to the primary controllers, with raise/lower commands for the setpoints. A small SICAM controller can handle the interface and provide the necessary logics. It is connected with IEC 61850 to the central controller on plant level.

Integrated solution

Power management is totally integrated in the energy automation platform, and runs on a controller on plant level, which is often designed redundant. The system configuration can easily be adapted to the size and importance of the plant and its grid. There are no additional devices needed for power management, and the efficient communication structure is based on reliable fiber-optic cables with redundant ring structures. The communication reduces parallel wiring significantly, and is open for the future by using the international standard IEC 61850.

The system configuration is based on proven concepts, and includes certified security concepts (fig. 6.6-22).

There is only ONE user interface used for monitoring and control as well as for power management. Thus, operation is very efficient and fast to learn, with high ergonomics and clear screens guiding the operator in critical situations, and providing both overview and detailed cockpits for the electrical engineers.

Power management offers even more functions for project-specific solutions. These include automatic switchover to island mode in the event of faults, and synchronization for reconnection. Protection schemes and interlocking are just to be mentioned here.

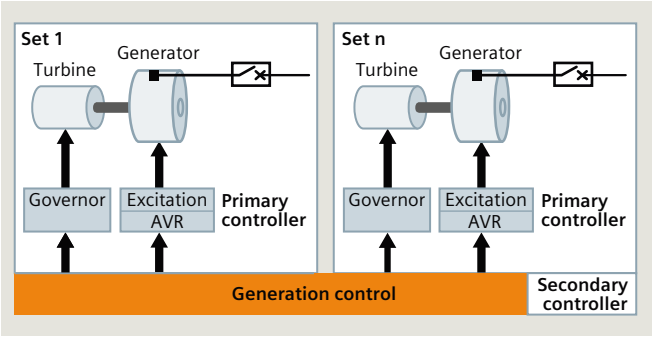

Fig. 6.6-20: Principle of generation control

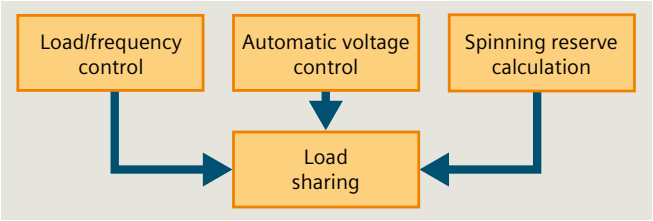

Fig. 6.6-21: Structure of generation control

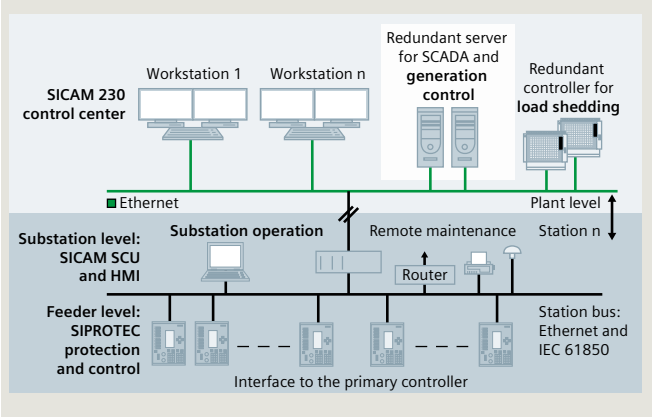

Fig. 6.6-22: Configuration with integrated power management

If energy costs are a large part of the production costs of the plant, it is possible to upgrade the system to optimize the schedule for the generators based on load forecasts.

Power management usually starts with a thorough analysis of the grid. Powerful tools to simulate and test the industry grid are available, combined with the expertise of skilled electrical engineers who can identify weak points in the grid and recommend measures to operate the grid in a safe way. Their analysis also delivers important parameters for power management functions.

6.6.4 Solutions for monitoring and control center

Introduction

Flexibility, modularity and scalability – solutions for monitoring and control center
The borders between substation automation, control center, and branch systems like wind power, airport and industry are fluent because of the increased performance of modern host systems and the software architecture behind them. Also, customer demands require a highly flexible, scalable and reliable control center system that support the workflows of today and make them prepared for the requirements of the future.

Monitoring and control center solutions cover a large range of application fields. With the engineering experience of thousands of systems for:

- Substation automation
- Control center for utilities incl. electricity, gas, water and district heating
- Wind power application
- HVDC platform
- Condition monitoring
- Industry
- Airports
- Buildings and hospitals
- Data centers
- Smart Grid applications.

Monitoring and control center solutions are a powerful part of modern energy automation.

The Power Enginering Guide deals with three application fields concerning system solutions for control centers. It is focused on the requirements and features of the main system, and describes the basis for all control center applications.

The sections “Solutions for renewable wind power” and “ISCM – Integrated Substation Condition Monitoring” describe more in detail two applications based on a common platform, but covering totally different demands.

Only a flexible platform allows to implement a lot of different system solutions as provided in the ENEAS solution portfolio.

System solutions for control center

Modern control centers have to fulfill a large number of requirements. They gather a wide range of highly detailed information about the network and its current state. This assists operating personnel in controlling the central network, and allows rapid reaction and specific countermeasures to be taken in the event of a fault. Additional high-quality applications, such as energy management, metering, asset management, etc., can either be integrated directly in the control system, or can be linked to it via interfaces to offer further value added. This provides an efficient system for the small to medium-sized range of applications that enhance the large network control systems available from Siemens (fig. 6.6-23).

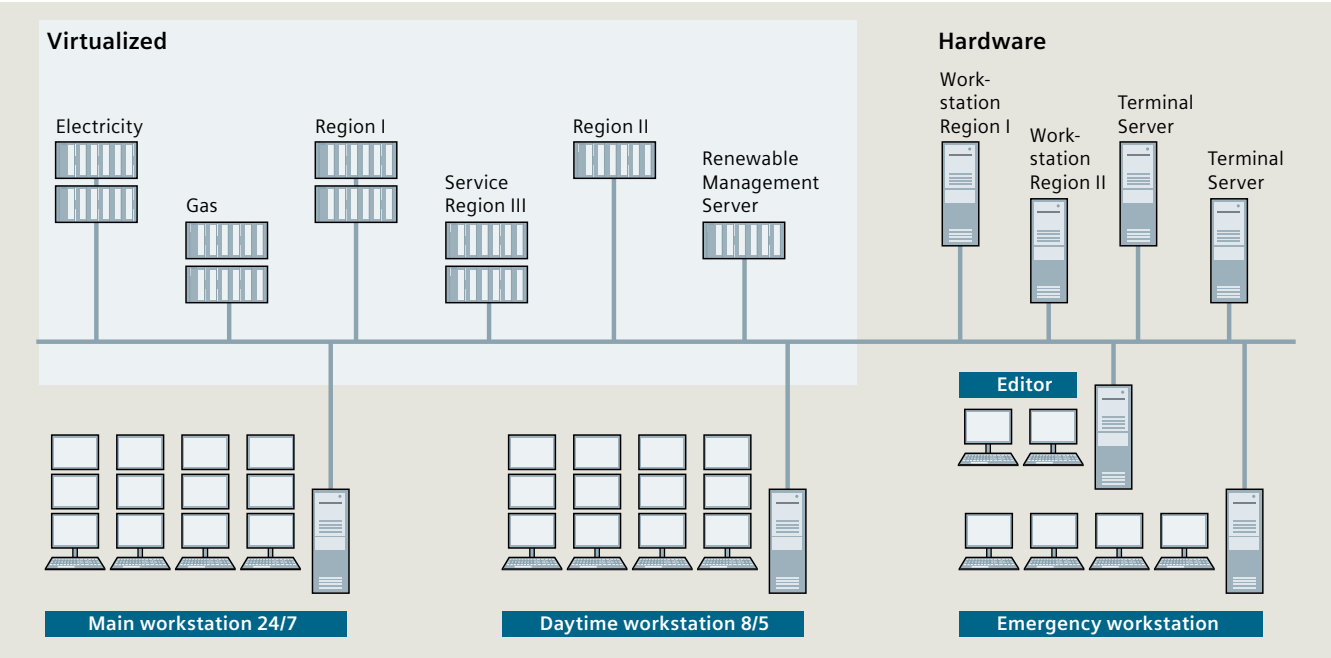

Fig. 6.6-23: Flexibility and scalability of control center solutions

Control center basic functionalities:
- Editor
- Alarm and event lists
- Worldview
- Database management
- Topology
- All-in-one, server-client
- Redundancy
- Web server integration
- Power distribution calculation
- Message control (SMS, mail, etc.)
- Communication protocols
- Multi-touch applications
- Report generator.

With a powerful basis of functionalities, it is possible to ensure the main workflows. But as a functional shaping, a lot of expansion modules that support the operator are needed. A flexible control center system also has to provide extension functions like:
- Topological coloring
- Fault localization out of protection data
- Switching sequence management
- EMS energy management system for electricity and gas
- Power distribution calculation
- Simulation
- Switching procedure management
- SQL outsourcing / Database connectivity
- Report generator
- Energy management for renewables
- Distribution automation functionalities.

Modularity
The Siemens control system software has always proven effective for traditional applications in substation automation and in power grids with electricity, gas, water, and district heating. It also serves as the basis for wind farm, industry, and airport technology. More importantly, the same platform is used for implementing application-specific solution packages, for example, condition monitoring, load shedding, network monitoring, meter integration, and power quality monitoring. These modules can be used in any combination, depending on the application.

Modularity allows to integrate new applications into proven systems without redesign of the existing system. That makes SCADA systems highly flexible.

Communication
Communication is a key factor for successfully integrating a wide variety of sensors into one control system. In the beginnings, control center systems started with proprietary vendor specific protocols. Interoperability was not provided. However, to replace or update a control center, it is necessary to implement the older communication protocols. In addition to the IEC 61850 and IEC 60870-5-104 standards, the Siemens solutions offer another 200 protocols, from the building automation bus to accepted industry protocols. Today's control systems must serve as the hub for communication with other control and monitoring systems, thereby permitting the connection of higher-level systems with, for example, IEC 61850 servers, ICCP / TASE.2, and IEC 60870-5-104.

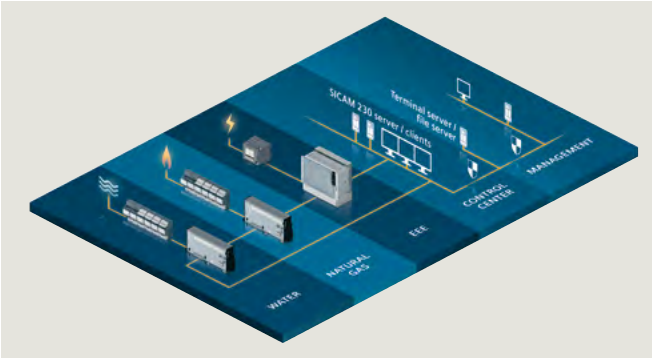

Fig. 6.6-24: Seamless integration into IT infrastructure

Maintenance and cyber security
Maintenance and cyber security are becoming increasingly important for command and control systems, which is why they are integrated into the operation and process areas as an integral component in the security concept. With control center solutions, system operators benefit from tested updates and patches, as well as from continual development as per accepted cyber security standards. Because update and backup management is simple and fool-proof, system support is as simple as possible and as secure as necessary.

Furthermore, a long-term upgrade strategy is a must. To protect the investment of the installations and applications, the systems have to be portable without engineering efforts to newer versions. For example, the SICAM 230 platform provides an upgrade over the last 20 years, thus ensuring software availability at least for the next 10 years.

Scalability – focus on small to medium-sized systems as expansions to large control centers
From industry PCs to multi-server solutions with over 100,000 data points, Siemens' small to medium-sized control center solutions are all based on the same system platform. This platform can be installed on all current Windows operating systems from a DVD, in order to order to ensure a consistent system quality environment which is both simple and convenient.

In addition, the control center systems are more and more integrated in the company's IT landscape. Not like in former times, where control center and business IT infrastructure were separated. This implents a nearly seamless integration into the company's IT infrastructure (fig. 6.6-24).

Virtualization
Virtualization enabled the number of physical servers to be reduced substantially, with a commensurate decrease in maintenance costs. Hardware can be shared and jointly monitored. Only four physical servers are used for all of the virtual servers, with data stored on a RAID system that is shared by all of the systems.

Solutions for renewable wind power

With the great experience from large onshore and offshore wind power projects over the last years, Siemens has engineered a lot of applications requested by wind power systems.

At the beginning, mainly substation automation and grid connection were the standard solutions covered by energy automation (see efficient network and energy automation solutions for wind power).

In addition, solutions are designed for asset monitoring, connectivity to turbine control systems, onshore and offshore applications, infeed controllers, and last but not least the integration of HVDC controllers into a SCADA system.

So, finally it is possible to design a complete bundle of secondary applications for wind farm solutions that represents a modular solution for wind power:

- Grid connection and grid code compliance, voltage / VAr controller – capacitor bank controller
- Energy automation solution for onshore and offshore substations
- Integration of auxillary components
- Platform signals (pumps, engines)
- Fire protection
- Lighting
- Building heating and conditioning
- Asset monitoring
- SCADA workstation (onshore and offshore)
- Energy management (e.g., German EEG)
- Remote operation center for renewables
- Communication to wind power controller
- Communication to TSO grid operator (fig. 6.6-25).

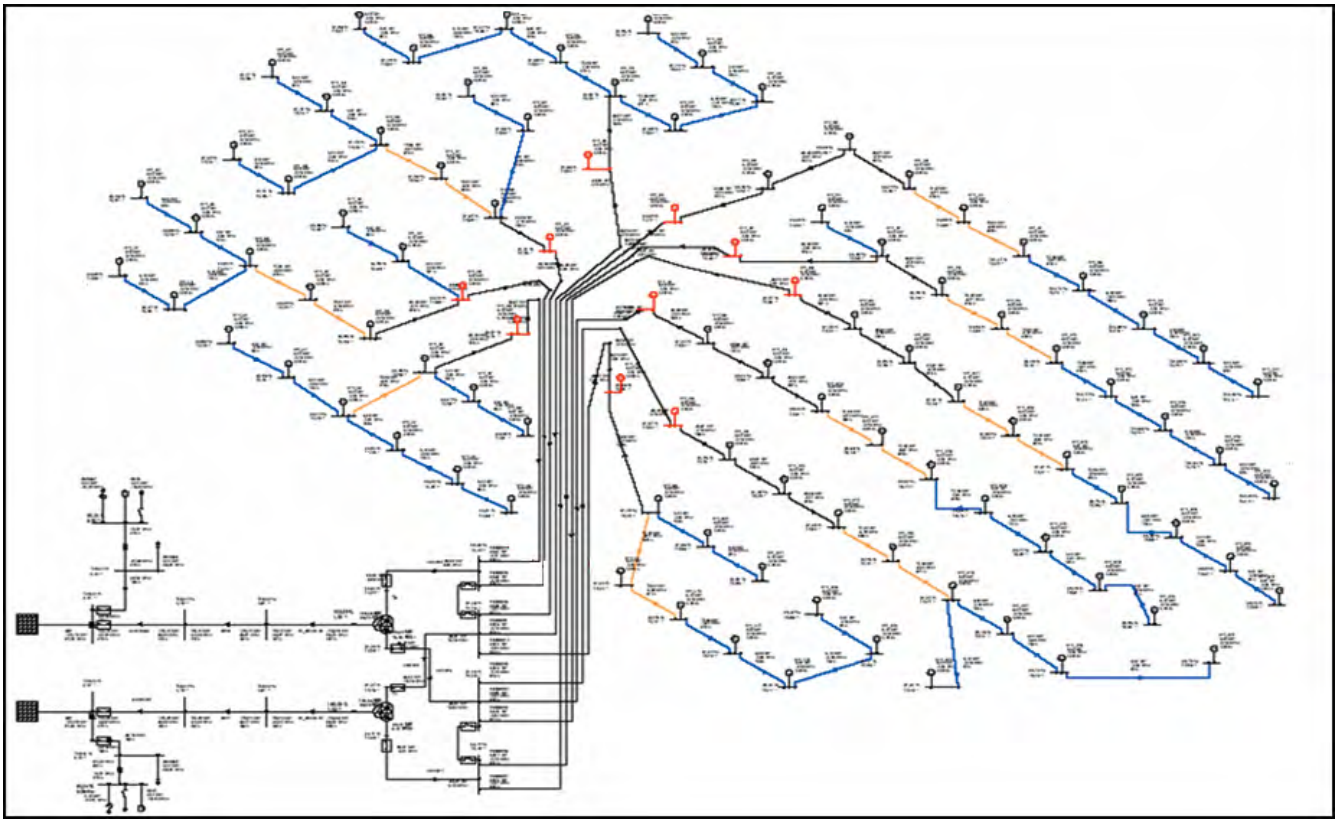

Fig. 6.6-25: Offshore wind farm grid

1
2
3
4
5
6
7
8
9
10
11
12
?

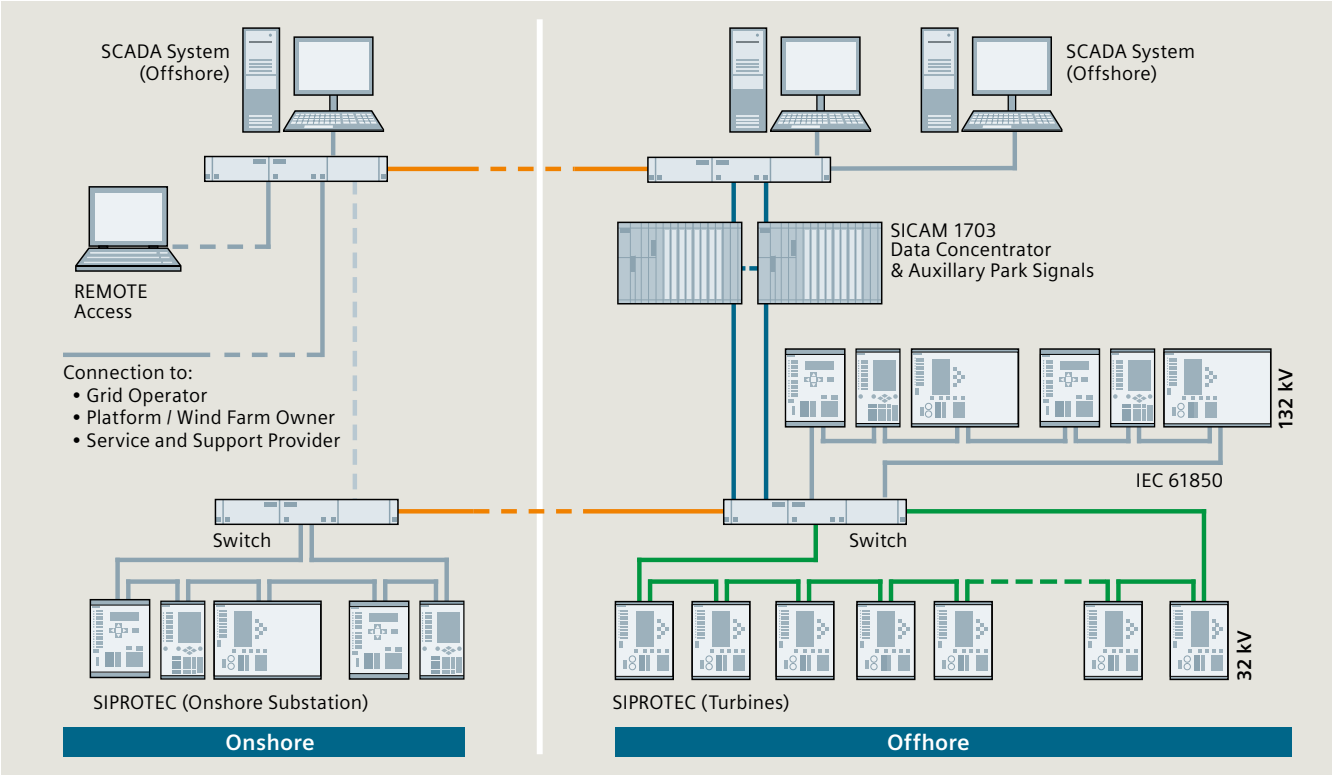

Fig. 6.6-26: SCADA system with onshore and offshore part

Maintenance and remote operation

Maintenance and remote operation are becoming increasingly important for wind power systems. Two drivers for remote control centers are:

- Distributed wind turbines
  Operation and maintenance crews observe turbines that are installed across larger regions, up to a country or a continent. That kind of installations are not easy to reach. With a remote system, the fault diagnosis is much faster and crews are coordinated much more effectively.
- Large wind power plants onshore and offshore
  Especially in offshore installations, the platforms and wind turbines are hard to access. Thus, on-site work must be planned very carefully, and is very expensive. A well-implemented operation and maintenance system supports onshore and offshore crews in order to reduce working time on site, maintenance efforts, and downtimes of the plant (fig. 6.6-26).

Large control centers for renewables have a different view on the wind farms and platforms than just the part of energy automation or substation control. Nowadays, it is possible to implement it with the Siemens solution for renewable wind power:

- Operation of the wind farm
- Observation of the complete system with
  - Turbines
  - Energy automation
  - Platform or wind farm auxillary signals
- Asset condition monitoring
- Fault management
- Remote operation.

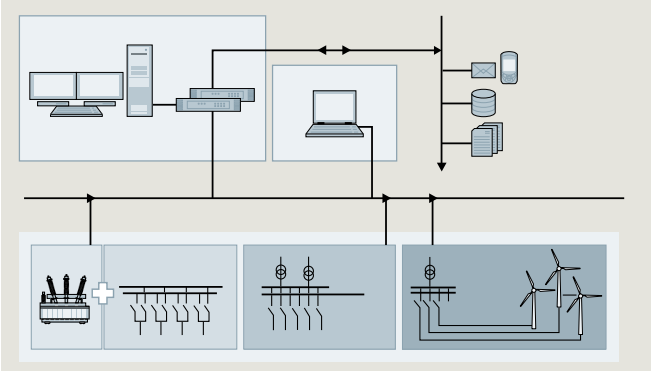

Fig. 6.6-27: Seamless integration into IT Infrastructure

Forced by effectivity and economical pressure, the wind power control center becomes a more complete and challenging application than any other control center application before.

ISCM – Integrated Substation Condition Monitoring

Maximum availability and reliability, along withknowledge of the maintenance condition, are vital for transmission and distribution networks. For this reason, equipment must be constantly monitored and analyzed with a view to keeping maintenance and outage costs to a minimum. There is no other way to optimize the performance of all technical equipment. With Integrated Substation Condition Monitoring (ISCM), Siemens offers a solution that integrates all technical equipment into one central condition monitoring system, thus helping system operators to improve their reaction time when it comes to preventing failures (fig. 6.6-27).

ISCM – centralized condition monitoring of all equipment

Regardless of whether monitoring the condition of transformers, switchgear (gas- or air-insulated), overhead lines, cables, or surge arresters is required, ISCM offers suitable packages for monitoring the condition of all components used. Additional signals from a system (access control, battery standby supplies, emergency power supply equipment, etc.) can also be integrated.

Unlike conventional systems that only monitor individual components, Siemens' integrated analysis system permits meaningful predictions about the future condition of all equipment – throughout the entire network.

In addition to its wide range of monitoring functions, ISCM excels in terms of scalability. Both these factors are essential when it comes to precisely adapting the condition monitoring package to the actual requirements of a particular system or network. The knowledge modules specially developed for ISCM provide exact analyses and calculations of the raw monitoring data, thereby permitting monitoring and timely alarm signaling that go far beyond mere limit monitoring.

ISCM can be integrated into any existing switchgear. As a complete, integrated solution, this innovative condition monitoring system delivers comprehensive information on the systems's condition in a standardized data format.

Transformer
- Hot-spot temperature (ANSI / IEEE)
- Aging / loss of lifetime
- Energy efficency / cooling efficiency
- Gas-in-oil analysis
- Bushing monitoring.

GIS (HV / MV)
- Gas density monitoring
- Partial discharge monitoring.

Circuit-breaker monitoring
- CT / VT monitoring
- Performance monitoring (tripping and reaction time)
- Spring or hydraulic system monitoring
- Maintenance counter and alarms.

Overhead line monitoring
- Voltage and sag monitoring
- Icing monitoring
- Ampacity monitoring (fig. 6.6-28).

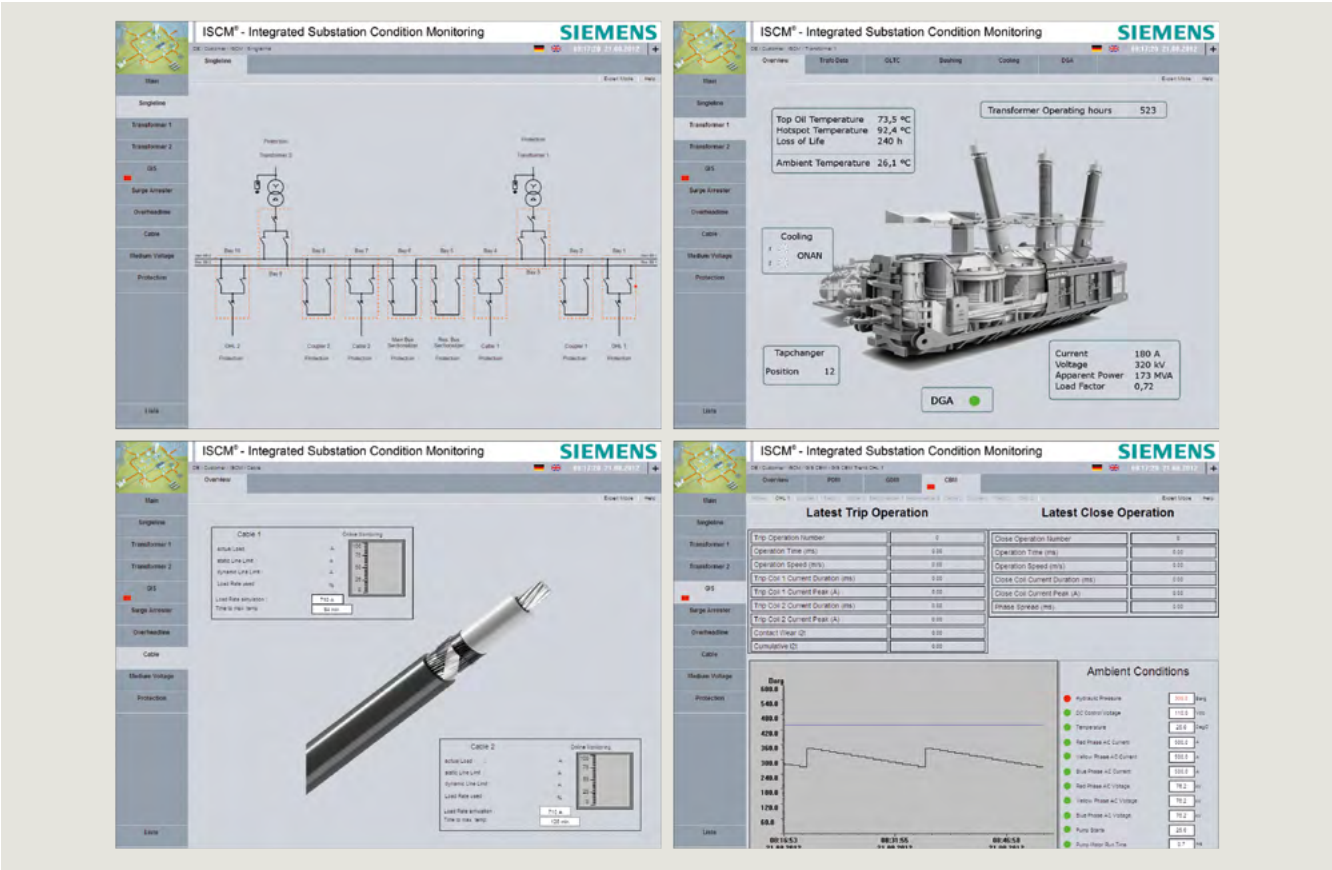

Fig. 6.6-28: ISCM – example of a central system for monitoring information

Grid diagnostics

SIMEAS SAFIR – efficiency in grid analysis and monitoring

Changing market conditions, more and diverse tasks, and increasingly small windows of time for an adequate reaction to grid disturbances pose new challenges to power grid operators. The detailed real-time overview of a power grid's performance is of the utmost importance today due to increased bidirectional power flow and a need for real-time system awareness. This supports the grid operators in having a clearer picture of the network by supporting blackout prevention, and by having clearer information of the assets and infrastructure being used. The electrical markets are in the deregulation process, and cost minimizing programs are put in place. In addition, more and more tasks must be fulfilled by the same crew (or by a reduced crew) at the system operator's site. Users require fast fault identification and fault clearance.

SIMEAS SAFIR

- Is a web-based system giving real-time grid information for better situation awareness
- Is a software platform that provides the basis for optimal data integration of various devices within a power system
- Collects fault records, substation automation events, power quality measurements, and synchrophasors
- Enables manufacturer independent, system-wide access to measurements
- Analyzes this data automatically
- Alows operators and experts to quickly focus on essential facts and take appropriate decisions.

Fault analysis, power quality, and wide area monitoring – all under one roof (fig. 6.6-29)

SIMEAS SAFIR is a server-based solution which is scalable from a single-server up to a multi-server solution consisting of application servers and specific data collectors. The data collectors can connect to substation automation systems (e.g., SICAM PAS), dedicated data gateways, SCADA, lightning detection databases, disturbance recording and power quality systems (e.g., SICAM PQS), phasor data concentrators, data warehouses, etc., and collect both event-related and statistical data from these sources. Moreover, the software can be customized to take full advantage of existing infrastructure and legacy systems. SIMEAS SAFIR standardizes all data to make them fully understandable and usable for automatic processing of any kind.

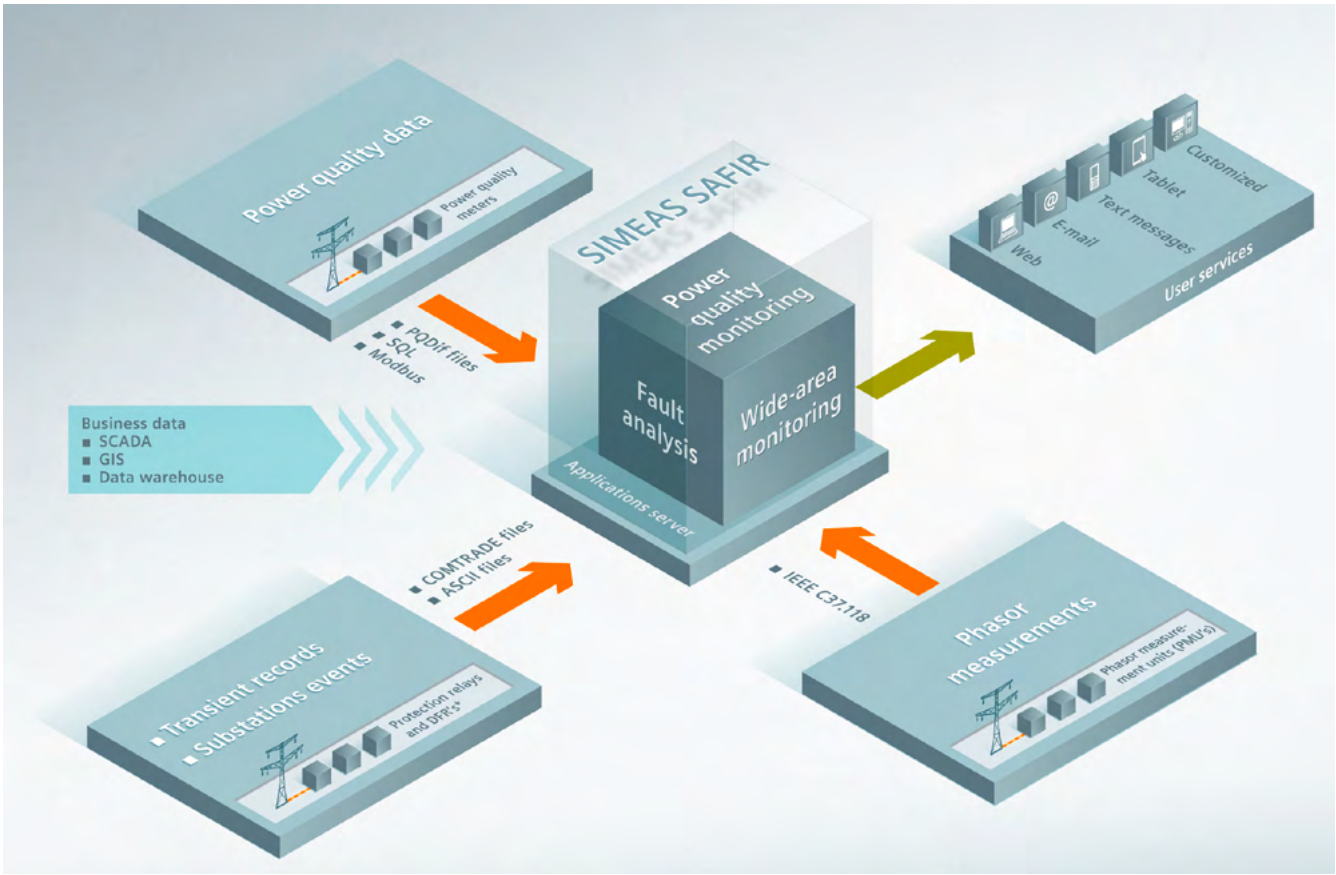

Fig. 6.6-29: SIMEAS SAFIR analysis cores: fault analysis, power quality, and wide area monitoring

Typical data sources:
- Technical data
  - Protection relays
  - Digital fault recorders
  - Power quality meters
  - Phasor measurement units
  - Power meters
  - RTU.
- Business data
  - Data warehouses
  - Supervisory control and data acquisition
  - Geographic information systems.

Data processing with SIMEAS SAFIR provides a number of tangible advantages for all departments that have to work with system monitoring data:
- Control and protection staff benefit from the automatic reading and processing of all available data, and a unified report standard. This makes cumbersome and time-consuming manual reporting a thing of the past.
- The asset management benefits from consistent fault analysis and the drawn conclusions about faults related to assets. In this way, manual fault and power quality reports handling becomes obsolete, and maloperation or defects can be prevented beforehand.
- The management can act on the basis of more and more transparent data, which makes maintenance faster and more calculable.
- Control center operators benefit from automated data collection and processing that makes possible timely and well-informed decisions on the basis of full access to all relevant data.

Fault analysis

Collecting data and putting the pieces of the event analysis puzzle together does not need to be a tedious, time-consuming matter. SIMEAS SAFIR utilizes data from all sources for time- and cost-efficient grid control and maintenance. Line faults due to environmental influences cannot be prevented. SIMEAS SAFIR makes handling such faults faster, easier, and more efficient.

- SIMEAS SAFIR collects fault records from all data sources like protection relay or digital fault recorder automatically – usually in COMTRADE format. In this process, time synchronization is verified and optimized, so the records can be grouped in event folders. These records are preprocessed to facilitate further analysis. The software detects analog signal changes, and provides numerous measurements, such as phasors and loop impedances, for each electrical state of the power system. User can also flag fault records and hide them, which occur during commissioning or protection testing. SIMEAS SAFIR enables for the control and protection staff a time-efficient analysis and reporting. This reduces costs and contributes to a better system reliability through measures derived from comprehensive data (fig. 6.6-30).

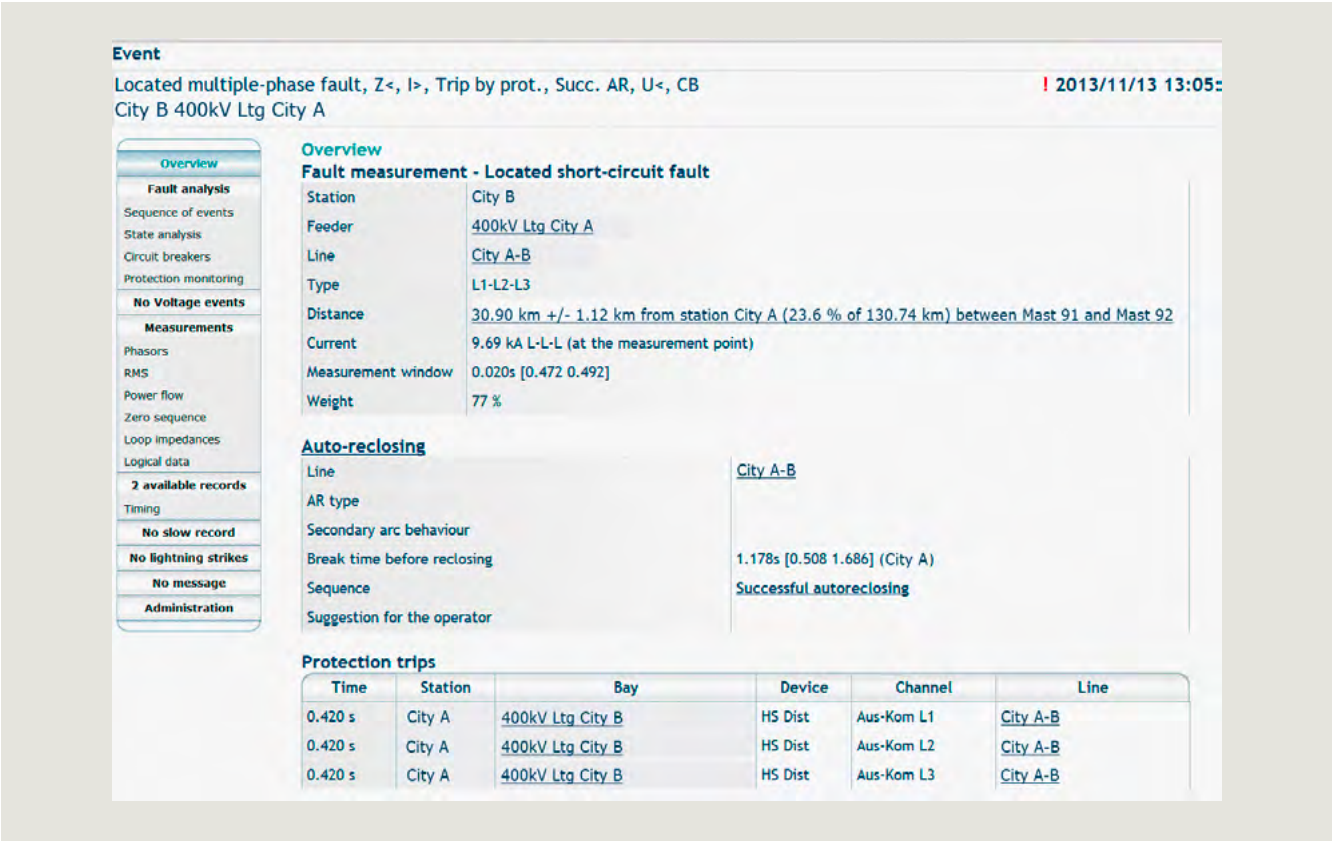

Fig. 6.6-30: Information overview of a selected event

- SIMEAS SAFIR can also collect the events at the source by using RTUs or dedicated IEC 61850 gateways, for instance. Alternatively, SCADA databases or exports from substation automation systems can be used. This way, SIMEAS SAFIR becomes a system-wide sequence of events (SOE) recorder, which is the optimum solution (fig. 6.6-33, see next page).
- SIMEAS SAFIR groups all data that are related to a power grid event into a single folder, which considerably facilitates the analysis: fault records, slow-scan records, voltage dips, and others. The application can then determine critical event patterns. Users browse the list of events which draws the attention on the spots and patterns of interest for each event. Events are tagged as important based on several criteria, and users can register to receive notifications based on their own preferences.

Power quality

Addressing the new challenges, power system operators have to master Power Quality (PQ) monitoring. Traditionally focused on the quality of supply at the lower voltage levels, PQ monitoring plays an increasing role on all voltage levels today. The reasons include the obligation to know the quality of supply to distribution systems or major customers, and to quickly assess the impact of voltage events.

But the flow of harmonic currents or unbalanced currents often also needs to be understood, from the origin of disturbances to the locations where it may disturb proper operation of power electronics or controls. That is why control and protection staff requires continuous, accurate recording nowadays (fig. 6.6-31).

- SIMEAS SAFIR uses voltage and current quality measurements from various power quality devices and systems from Siemens and from other suppliers. The preferred data sources are configurable PQ recorders featuring TCP/IP communication and standard protocols, such as Modbus. SIMEAS SAFIR can fetch essential measurements directly from these devices, even at short intervals. Alternatively, measurements can be imported in PQDIF format or from vendor-specific PQ databases.
- SIMEAS SAFIR displays the measurements on the web interface, regardless of their origin, and facilitates easy browsing of numerous data channels. SIMEAS SAFIR also provides a scaled comparison between the PQ indicators and the relevant compatibility thresholds. For reference, the power quality measurements can be compared to regulatory thresholds (e.g., according to EN 50160).
- In the end, SIMEAS SAFIR can also send a PQ summary of the last seven days by e-mail to detect and understand quality issues.

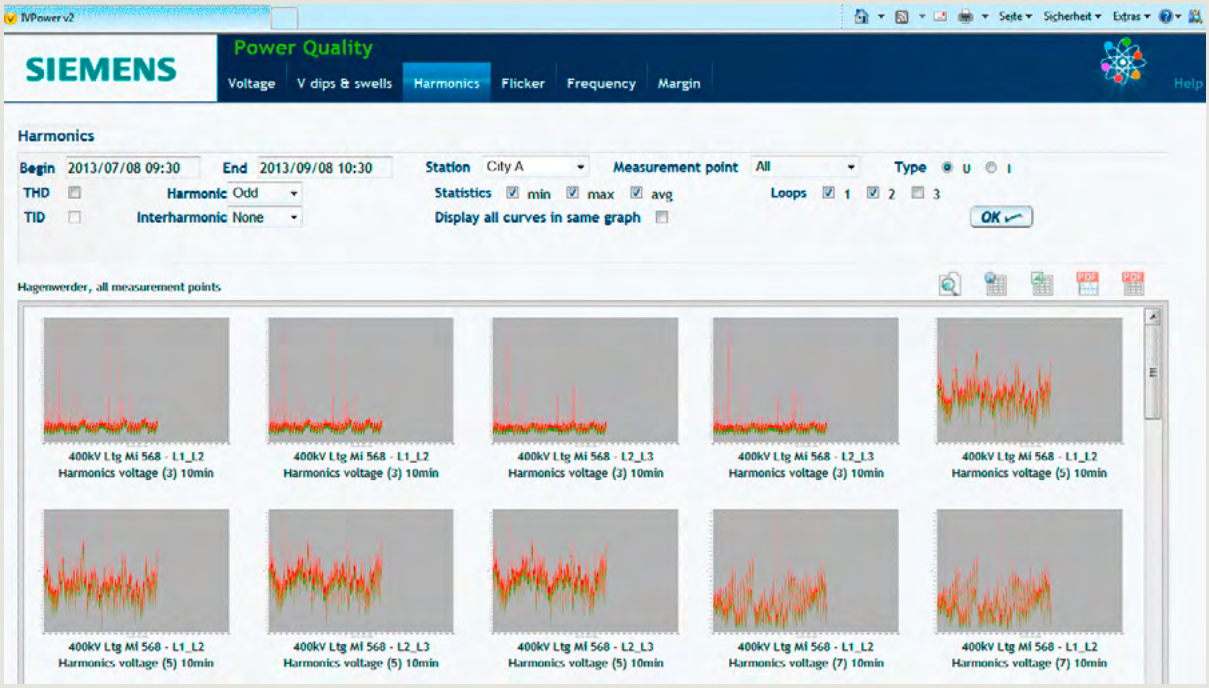

Fig. 6.6-31: Power quality web page

Wide area monitoring
Automated data collection from PMU enables transparent information about critical grid situations in order to react adequately – company-wide and web-based.

- SIMEAS SAFIR takes advantage of the increasing availability of phasor measurement units (PMU). By connecting to phasor data concentrators (PDC), the server can display synchrophasors just as easily as other online measurements on any connected client PC, thus allowing frequency tracking and phase monitoring (fig. 6.6-32, fig. 6.6-33).

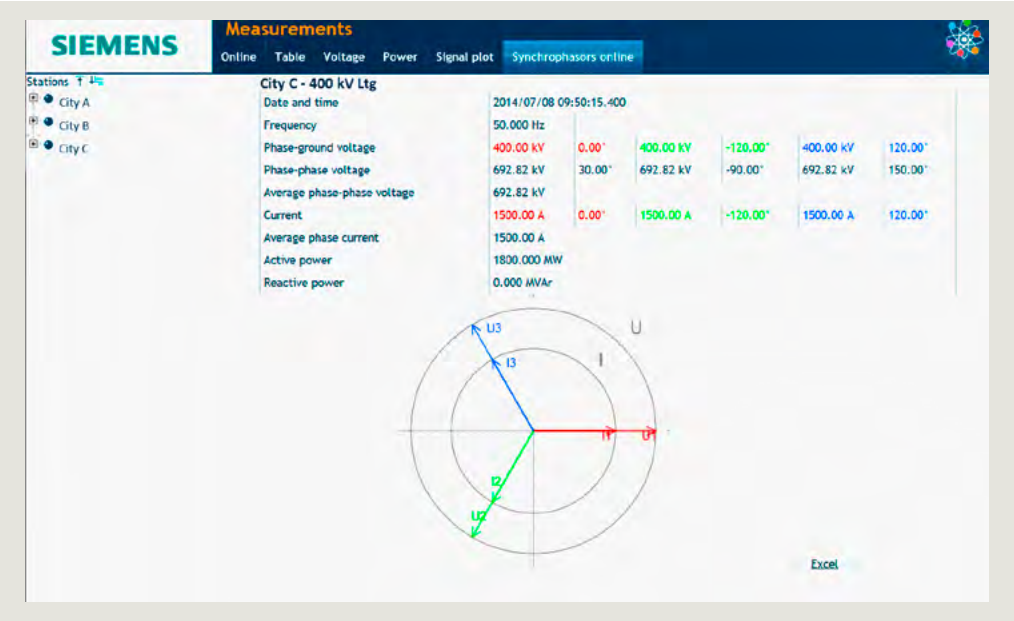

Fig. 6.6-32: Phasor diagram

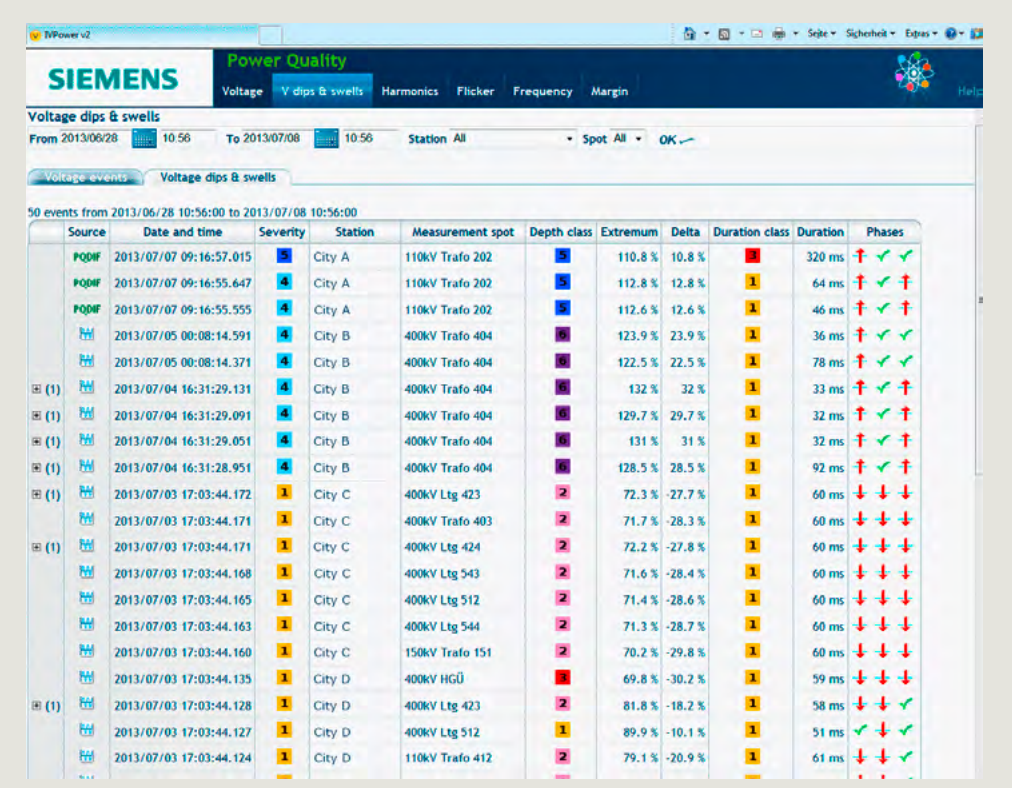

Fig. 6.6-33: Event list

Using either power quality meters or phasor measurement units, SIMEAS SAFIR can compute the average value of power system frequency, and display trend diagrams with various time scales. Measured frequencies exhibiting significant deviations are partitioned in islands. The frequencies of each island are traced and compared to detect islanding and assess its gravity in numerous situations.

- SIMEAS SAFIR displays tables and geographical views of the positive-sequence voltage amplitudes and angles across the monitored power system. Furthermore, the user can select couples of PMU locations and appropriate thresholds in order to trigger phase events.

Further functionalities

- SIMEAS SAFIR keeps recorded measurements from PQ recorder and PMUs in a database buffer for several weeks. This makes it possible to capture recordings afterwards, even weeks after the event of interest.
- SIMEAS SAFIR can provide estimates of the source impedance whenever a significant power change takes place. This feature is especially useful with renewable generation units and HVDC stations that require the verification of short-circuit power.

SIMEAS SAFIR takes a broader approach toward voltage change than power quality recording, and looks at the changes of phase-to-earth, phase-to-phase, and sequence voltages altogether.

7 Grid control and grid applications

7.1	**Grid control**	**439**
7.1.1	The role of the network control system in power system management	439
7.1.2	Network Control Centers in a deregulated energy market	447
7.1.3	Common Information Model	450
7.1.4	IT Integration and Service-Oriented Architecture	452
7.1.5	Spectrum power™ control systems	454
7.1.6	Power and generation applications	461
7.1.7	Transmission applications	464
7.1.8	Distribution applications	467
7.1.9	Advanced Distribution Management System (ADMS)	471
7.1.10	Active network management	474
7.1.11	Smart Grid Energy Manager (SGEM)	475
7.2	**Grid application platform and applications**	**476**
7.2.2	EnergyIP platform overview	479
7.2.3	EnergyIP applications – Introduction	480
7.2.4	Meter Data Management	481
7.2.5	Billing Service	482
7.2.6	Remote Device Control	483
7.2.7	Market Transaction Management – the blueprint for Data Hubs	484
7.2.8	Advanced Device Management	486
7.2.9	Analytics Foundation	487
7.2.10	EnergyIP NTL – combating non-technical loss	488
7.2.11	Virtual Power Plants for smart markets	490
7.2.12	EnergyIP DEMS – VPP solution overview	492
7.2.13	EnergyIP DRMS (Demand Response Management System)	494
7.3	**Managed Services**	**496**

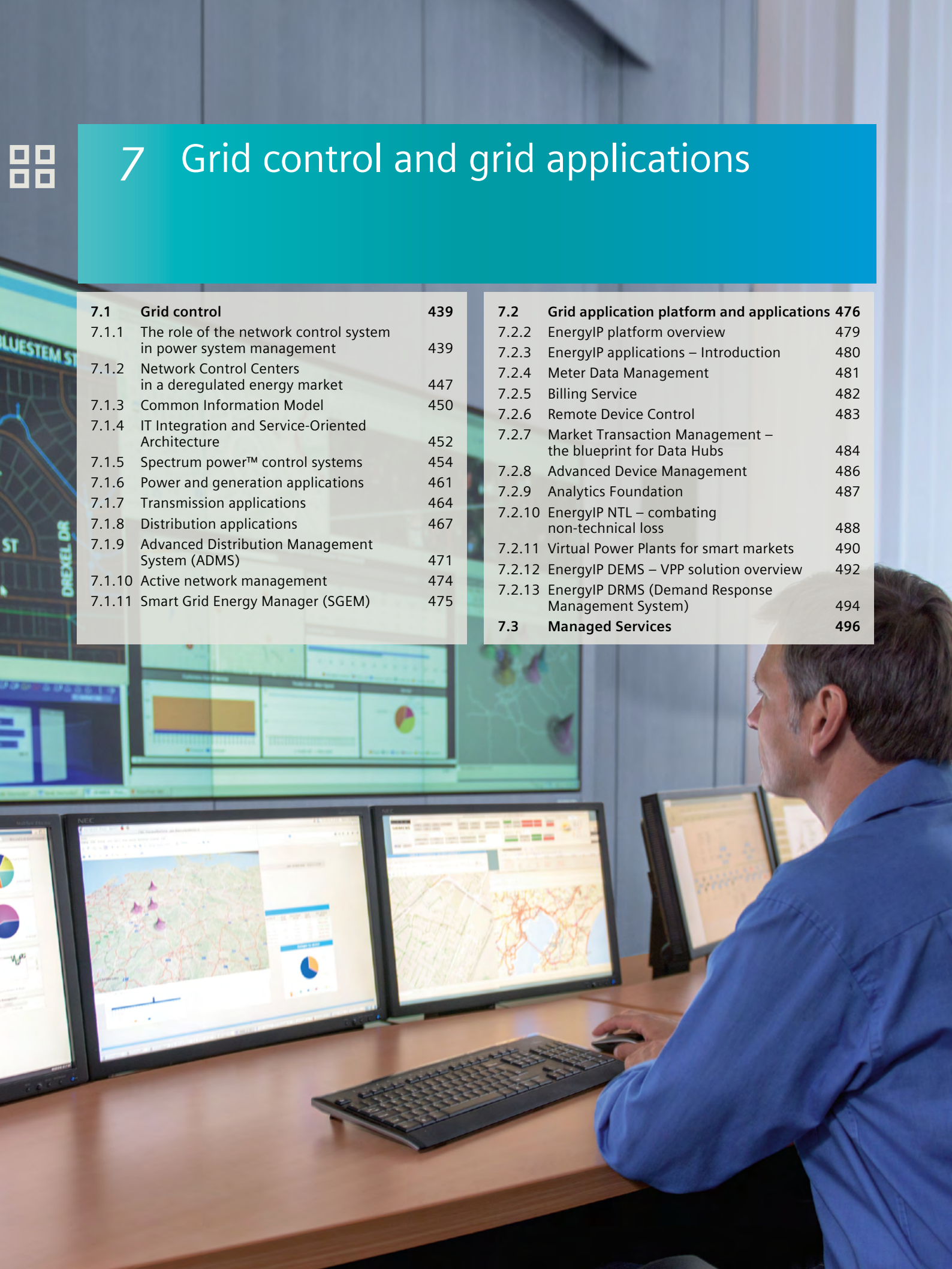

The key challenges in today's energy systems are derived from an increasingly complex grid as the adaption of more and more distributed generation and energy storage inquires advanced solutions. One-way flows are evolving into multi-directional flows of energy and digital information. Utilities need help how to manage the Internet of Things (IoT) to make best use of the ever increasing amount of devices. Consumers and prosumers demand more information about their energy usage, and expect guidance on how to conserve energy and reduce costs. The resulting complexity requires a new, integrated approach to delivering the right information technology and operational technology solutions that will support the transition to a digital grid.

Grid control systems with Spectrum Power manage the interconnection and balancing between generation and consumption of electricity.

A next generation grid control center technology and a totally integrated IT/OT framework is the key to move towards a more digital grid. Advanced Operational Technology (OT) operated under a common user environment is essential to increase the operator's situational awareness in order to ensure grid stability and reliable energy supply. Together with seamless enterprise, the IT integration of external systems, such as GIS, CIS, Workforce Management and Asset Management systems via the CIM-based SOA integration framework is indispensable to better manage the grid and benefit from new business opportunities.

Spectrum Power™ is the product of many decades of experience, and the over 3,000 grid control systems installed worldwide by Siemens in that time pay testament to its success.

Smart Grid and Smart Market applications on EnergyIP

The advanced EnergyIP™ software application suite with meter data management, distributed energy resource management, revenue protection, and prepaid energy transforms business operations and delivers accurate billing, proactive outage management, revenue protection, customer engagement, and more. The production of data within the electricity system is increasing dramatically, new technologies like smart meters or phasor measurements will produce tons of data which needed to be turned into information by IT technologies like big data analytics or self learning algorithms, for example. Also, the flexible integration of the output from the various existing or upcoming data sources becomes paramount to benefit from the data. The industry-proven EnergyIP application platform helps leading electric, gas, and water utilities modernize the speed of processing and analyzing sensor data.

Deployed at over 60 utilities worldwide, the Siemens EnergyIP solutions empower utilities and energy retailers to rapidly deploy software and communications systems to effectively scale and maximize operational efficiency.

And why an integrated platform approach?

The Siemens integrated IT/OT platform approach provides standardized data interfaces as well as common data models to achieve the utmost interoperability. This reduces the IT integration costs dramatically and minimizes the costs for data management. The seamless integration of grid control and Smart Grid application (fig. 7.1-1) offers additional benefits. Faster fault identification and location reduces the outage time and improves the customer satisfaction. Condition-based maintenance reduces costs and ensures reliable supply. System operators will stay ahead of the curve by mitigating the risks associated with regulatory changes and new technologies with the open and integrated IT/OT architecture based on Spectrum Power and EnergyIP.

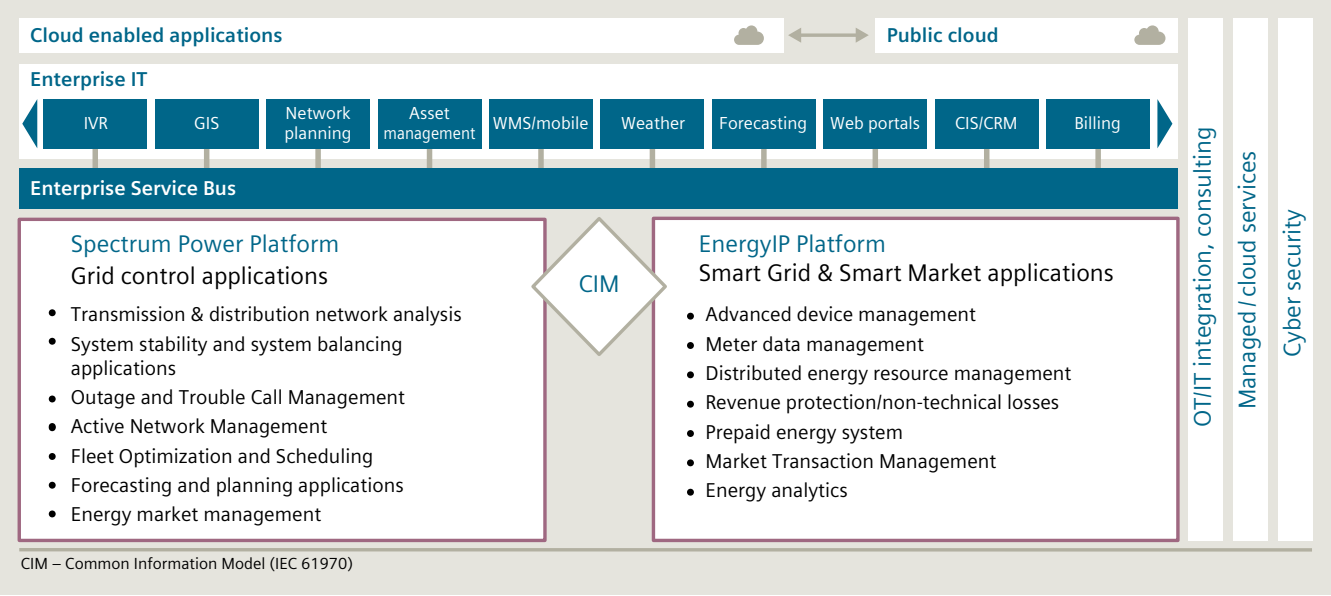

Fig. 7.0-1: Integrated platform strategy to ensure minimized risk and high cost efficiency

7.1 Grid control

Maintaining a reliable supply of electrical power to consumers is a highly complex process as most of this power cannot be stored and the individual components of this process, forming what is called a power system, can be spread over a wide geographical area. Energy management in the age of Smart Grid is becoming exceedingly more complex and challenging. Networks are expanding at a much faster pace than even a few years ago and demand a high degree of individual control and monitoring. With the integration of renewable and distributed energy, varying grid capacities, and often weakened infrastructure, there are many different aspects to be taken into account.

Spectrum Power™ links power systems of any size and volume/extent into an easily and centrally controlled grid/energy network, enabling a reliable overview and fast assessments. Information can be accessed remotely anytime, anywhere – making it the perfect tool for flexible and efficient network control.

Power system operators need a solution that ensures a high level of energy reliability and the lowering of costs, fast fault detection based on smart meter information, network-wide voltage/VAr optimization and blackout prevention measures, on-time delivery, controlled budget, expert risk management, and sustainable, environmentally friendly products and solutions (fig. 7.1-1).

7.1.1 The role of the network control system in power system management

History

The control and information technology used for the management of a power system has its origins in the automation of power plants. The primary objective was then to improve operational reliability.

With the increasing number of power plants and their interconnection via the grid, primary frequency control, also referred to as generator droop control, was no longer sufficient. To improve on power delivery quality, coordination, including secondary frequency control, of power generation and, later, external interchange became unavoidable and was promptly implemented in control centers.

Before the introduction of the transistor in 1947, the vast majority of protection and control devices used in power system control were of electromechanical design. In the early days, information was transmitted by means of relays and pulse techniques, but with the introduction of electronics it became possible to implement increasingly efficient transmission means. At the end of the 1960s, with the introduction of the first process control computer, the first computer-assisted power and frequency control systems became possible.

As computers became more efficient in the 1970s, the switchgear in transmission networks was also gradually monitored and automated with the aid of power system control technology. In response to the growing demand for network control systems, a number of companies began developing standardized systems for these applications. The systems of that period can be called the first generation of network control systems.

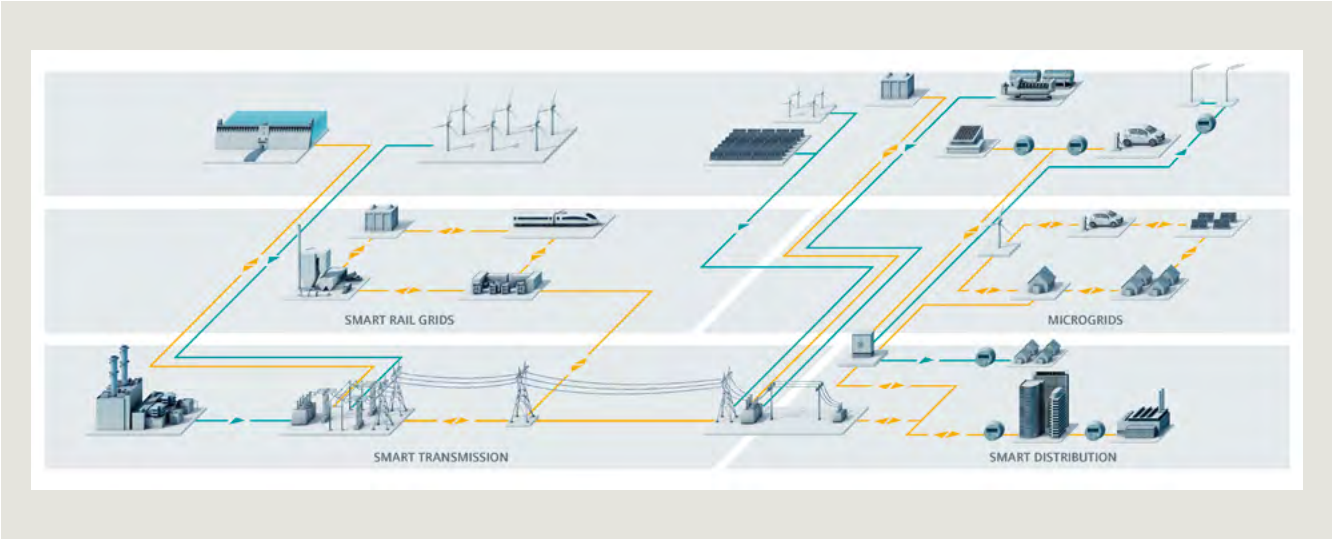

Fig. 7.1-1: Power control systems – serving the complete energy chain from generation to load

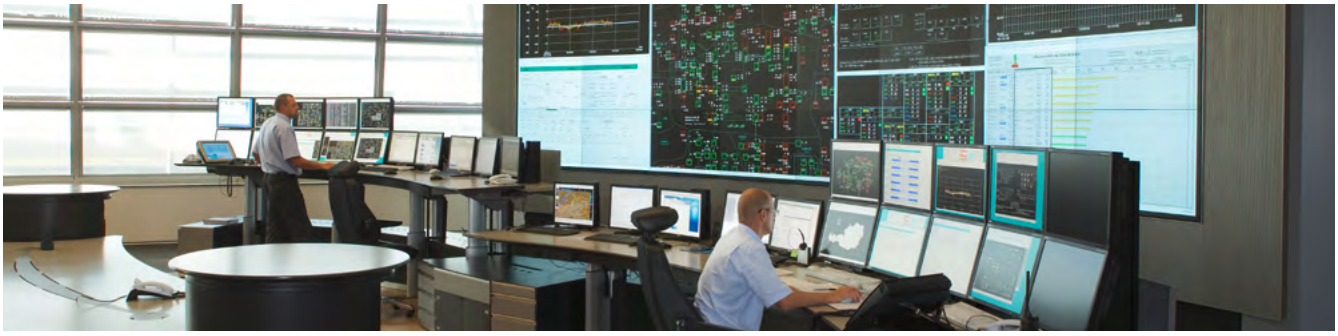

Fig. 7.1-2: Todays' operator user interface of a large power control system

Because of the inadequate graphics capability of computer terminals at that time, the master computers were used mainly for remote monitoring of unmanned stations or for performing calculations to support operations. The network state was displayed visually on large switch panels or mosaic walls that were also used to control the switchgear. Only as the performance of graphical displays improved were operation management functions gradually transferred to VDU-based workstations.

As computing power continued to increase in the mid-1970s, it also became possible to use computers for optimization processes. With the aid of optimization programs run initially as batch jobs and later online as well, it was possible, for instance, to determine the most economical use of hydroelectric and thermal power plants. These programs also provided a method of economically assessing the exchange of energy, a basic requirement for energy trading later on. Increasing computer power was, however, also harnessed to further develop man-machine communication towards greater user friendliness.

In the mid-1980s, power system control, which had until then been restricted to transmission networks, was increasingly used in the distribution network area as well. Apart from pure network supervision, additional functions such as work or material administration were integrated into control systems during the ongoing automation of the distribution network.

Network control in Smart Grids

Since these "good old days", a constant and reliable energy supply has been central to the growth of industries, vital to economic stability, and crucial to social wellbeing. This has not changed, but as the complexity of the world continues to increase, energy systems must adapt to contend with these new and dynamic challenges. The energy infrastructure needs to be "smarter".

The control center, as the utility nerve center, needs to integrate operations and information technology for continued improvements in grid reliability management (fig. 7.1-2).

To meet these challenges, Spectrum Power™ provides customized SCADA/EMS/DMS solutions from a range of proven and innovative components – basic components of SCADA, communications, and data modeling, plus additional applications for grid optimization and renewable management (fig. 7.1-3).

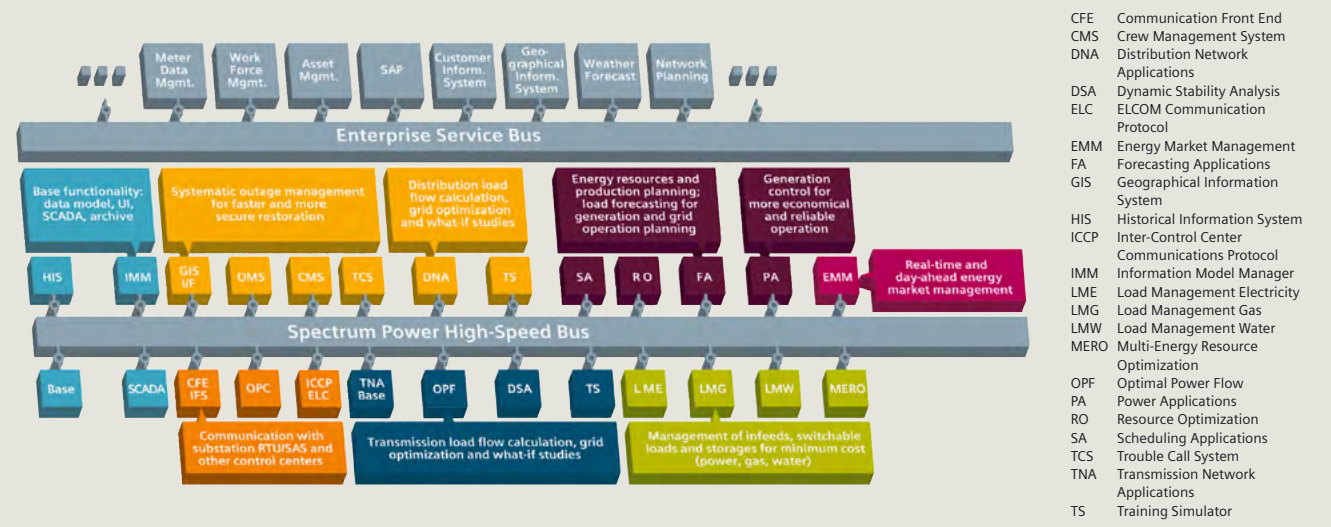

Fig. 7.1-3: Power control system – components overview

1
2
3
4
5
6
7
8
9
10
11
12
?

Thanks to a Service-Oriented Architecture (SOA), Spectrum Power™ is able to use other IT systems in a company – and these systems can access the services of the grid control system in turn. Standardized processes, interfaces, and messaging specifications based on IEC 61968 and IEC 61970 standards support the trouble-free exchange of data between the systems.

From database management to network applications, Spectrum Power™ is equipped with the latest functionality for maximum reliability and efficiency under all operating conditions. Once integrated in the data processing environment, it supports all business processes. As a leading supplier of EMS, Siemens has years of experience in providing applications that have proven highly successful in systems of every conceivable size and complexity.

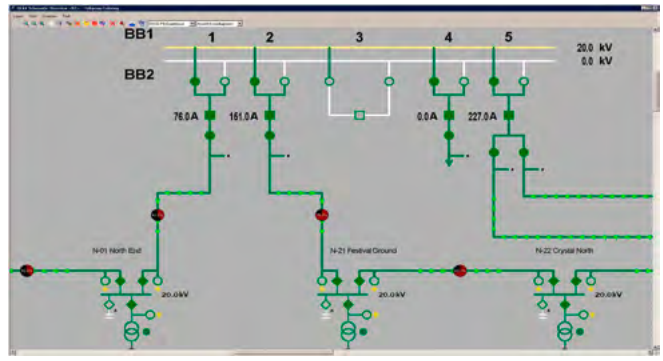

Fig. 7.1-4: Example for a network diagram of a power grid

Spectrum Power™ offers a comprehensive range of functions for requirements in energy generation, network operations management, and communications, including:

- Supervisory Control and Data Acquisition (SCADA).
- Data input and data modeling
  - Data modeling based on IEC 61970 using the Common Information Model (CIM)
  - Powerful graphics editor
  - Parallel multi-station engineering with job management und undo functions
  - Powerful online data activation
- Extensive communications options with communication protocols
- Maintenance and outage management
  - Fault report handling
  - Planning and monitoring
  - Fault correction
- Functions for managing transmission networks
  - State estimation
  - Load flow calculation or short-circuit calculation
  - Contingency analysis
- Functions for managing distribution networks
  - Fault isolation and restoration of power
  - Load flow calculation
  - Short-circuit calculation
  - Expert system
- Functions for energy data management
  - Schedule management
  - Forecasting
  - Archiving
  - Reporting
- Functions for demand side management
  - Load management for electricity and gas
  - Water supply management
- Functions for electric power producers
  - Automatic generation control with load frequency control
  - Scheduling applications.

Real-time processing

SCADA applications are basic functions of the network control system, and provide a means of supervising and controlling the power supply system. For this purpose, all information transmitted from the network is collected, preprocessed, and visually displayed in order to keep the operator constantly informed about the current operating state of the power supply system. The operator can also store additional Information in the system or enter corrections for incorrectly reported information or information reported by phone into the system in order to complete the current operational network display (fig. 7.1-4).

The main objective of preprocessing is to relieve the operator of routine work and to supply the operator with essential information. The most important preprocessing steps to mention are limit value monitoring and alarm processing. These are absolutely essential, especially in the case of a fault incident, in order to enable the operator to identify the cause of the fault quickly and precisely, and to take suitable countermeasures. The supply state of the network elements is shown in color (topological network coloring) in the process images used for network monitoring, in order to provide better visualization of the current network state. As a result, the operator can see at a glance which network sections are supplied, and can identify any interruption in the supply at that particular moment.

Another important function performed by the SCADA applications is the so-called operational logbook, in which the process history is shown chronologically in plain text. Entries in the operational logbook can be triggered by events in the power supply system as well as by operator actions.

Switching measures in the power supply system, such as disconnecting and earthing a cable so that maintenance can be carried out without danger, generally require a sequence of individual commands. Because disconnection processes of this type have to be checked for plausibility in advance, a switching sequence management system in a control system can assist the operator in drawing up and testing the required switching sequences. During this process, the switching actions carried out in a simulation environment are recorded and can then be carried out partly or fully automatically after positive testing and in the real-time environment.

Process data and control center communication
Process data from operational equipment is transferred and recorded directly from the process. There is often also an exchange of process data with other control centers. This exchange of information also has the purpose of enabling processes in the directly adjacent section of the network to be included in the network supervision and control process.

Today, the standardized IEC 870-5-101 and 104 protocols are increasingly used alongside old proprietary transmission protocols for transferring information from the local network. The OPC (OLE for Process Control) standard also offers a method of process communication and a means of communicating with the world of automation. The Inter-Control Center Communications Protocol (ICCP), also known as TASE2, has now become the established form of data exchange between control centers and is compliant with IEC standard 870-6.

Archiving
Another basic function of a control system is the processing of archive data. Archive data processing is responsible for cyclical collection, storage and aggregation. The archive allows different functions for data collection that group together and further process the data received from the real-time database. The resulting values are stored in turn in the archive. However, archives often also provide additional functions such as generating a sliding average or determining maximum and minimum values in order to process the real-time values before they are stored (fig. 7.1-5).

The calculation functions of an archive usually also comprise functions for implementing recurring calculations for time-dependent data. For example, the four fundamental operations can be used on measurement values. These calculations can be carried out at several levels, with the calculations at the lowest level being completed before the calculations at the next higher level are started. A typical application is the totaling of power generation in its entirety and per power plant type, or the balancing of energy consumption according to regions under different customer groups.

Load forecasting
In order to ensure a reliable power supply, a forecast of energy consumption (load) over time is required. Forecasting methods working on the basis of a regression approach, Kalman filtering, or neural networks are used for medium-term planning in the range of up to one year (load planning). For the short term, i.e., in the range of up to one week, pattern-based approach is typically used with options to adjust for actual load values, actual weather data, etc.

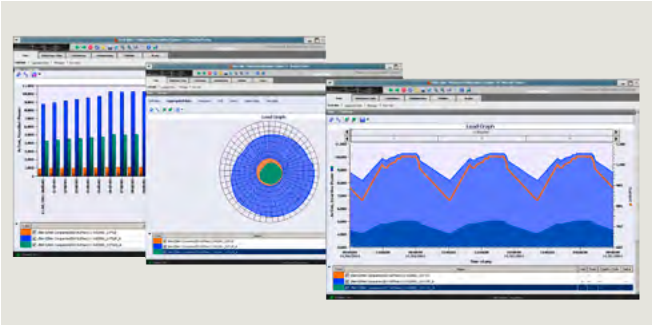

Fig. 7.1-5: Spectrum Power™ HIS diagrams

Power generation planning
A power producer company has typically a portfolio of different power plants available for generating electrical power. Power generation planning is made whilst economically optimizing the generation of the power needed according to the load forecast, market price forecast and contracts, taking into account the characteristics of the different power plants in the portfolio (fuel costs, start-up and shutdown times and costs, and rate of power change) to produce a generation timetable for all power generating units. These timetables are then used as target for power generation control.

It has to be taken into account that, to meet the load, the power producer may opt to buy additional energy
- from a third party within the same power system in which case purchase contracts will be integrated to this optimization process, and/or
- from a third party outside the same power system in which case interconnection exchanges will be integrated to this optimization process.

Accordingly, purchase and interchange schedules will then be integrated to these timetables.

Power generation control and frequency regulation
The advantage that electric power has of being universally usable is offset by the disadvantage that it is difficult to store. For this reason, the generation of electrical power must take place simultaneously with consumption. The frequency is used as the means of measuring whether generation and consumption are balanced. As long as generation and consumption are in equilibrium, the network frequency corresponds to the rated frequency. If consumption exceeds the power generation, the difference is covered from the kinetic energy of the rotating generator or turbine masses. This drawing of energy, however, causes a reduction in the rotational speed and hence a drop in the frequency. In the reverse situation, i.e., in over-generation, the difference is converted into kinetic energy, and the speed of rotation increases, and so too does the frequency.

Because the system frequency is equal at all points in the system, it can be easily used as the input quantity for controlling the frequency of power systems. New setpoint values for the individual generators are determined there from the measured frequency deviation on the basis of technical and economic factors, and transmitted to the decentralized generator control systems by means of telecontrol. If a power supply system is linked to adjacent power systems, the frequency as well as the power exchange with the adjoining systems must be monitored and controlled. This power exchange is taking place over a number of interconnections for which the flow is telemetered.

A PI-type controller, based on a so-called Area Control Error (ACE) updated, typically, every 2-10 seconds, is used to identify the net generation adjustment required to maintain the frequency at or very near its nominal value. Contractual power exchanges can also be accounted for by the same controller, so that deviations from the interchange schedules are minimized. Accordingly, individual generation unit adjustments will be calculated and sent as correction signals to the generating units participating to this regulation. This assignment process will also account for the committed (economic or market) schedules of the generating units and the reserve requirements. The set of applications supporting this process is referred to as Automatic Generation Control (AGC).

Transmission network management applications

A transmission network is characterized by a meshed structure, being mesh-operated and having a number of interconnections with one or more external networks. Most, if not all, of its substations are automated. Typically most, if not all, of its switchgear statuses, busbar voltages, and line flows are telemetered. The transmission network includes typically an extra-high-voltage (EHV) part and a high-voltage (HV) part. The latter is sometimes referred to as the sub-transmission network. Typically, these measurements are in such a number that they provide more information than necessary to solve a power flow. However, these measurements include errors due to the accuracy of their measurement equipment, and are even sometimes outright wrong due to faulty measurement equipment and/or telecommunication. A least square approach for optimal estimation combined with a statistical analysis for bad measurement is applied to this problem to determine most accurately the state of the network. This function is commonly referred to as State Estimation. The estimation of the network state supplies the operator with a complete load flow solution for supervising the network, including those sections of the network for which no measurement values are available.

The network state estimation is generally followed by a limit value monitoring process that compares the result of the estimation with the operating limits of the individual operational equipment in order to inform the operator about overloads or other limit violations in a timely fashion. The load flow solution of the network state estimation is then used by other network functions such as contingency analysis, short-circuit analysis, or optimal power flow.

The contingency analysis carries out a, typically very large, number of “What if?” studies in which the failure of one or more items of operational equipment is simulated. The results of these load flow calculations are then compared against the operational equipment limits in order to assess the network security resulting from an operational equipment failure. Typically, a transmission network must remain secure against any single equipment failure (n-1 criterion), and against selected double and other multiple equipment failures which will be all simulated by this contingency analysis application. In the case of security violations, other application tools can then be used to identify preventive or corrective solutions for such cases with violations.

The short-circuit analysis simulates different types (e.g., phase-to-earth) of short circuits at selected node points (typically busbars) of the network to calculate the resulting fault current and fault current contributions from neighboring branches and generating units. The results are then compared to the short-circuit ratings of these near-the-fault equipments, i.e., circuit-breaker, branch and/or generating unit, for possible violations. The operator is informed about any limit violations so that suitable remedial action can be taken in a timely fashion.

The optimal power flow attempts to determine the settings of control equipments, e.g., the tap of a transformer, to operate optimally the power system according to some selected criteria and subject to operating constraints such as equipment limits:

- Network loss minimization: Network losses are directly related to the amount of reactive power flow and, therefore, to the voltage profile throughout the network. The optimal power flow will minimize the transmission losses by determining the optimal settings of all voltage controls available, i.e., generators, transformers, capacitors, etc.
- Generation cost minimization: The optimal power flow will minimize the total cost of generation by determining the optimal dispatch of each generating units. Today, this criterion is applied mostly in prederegulated or centralized markets. Variations of this criterion, e.g., involving deviations from market set points, are also solved by optimal power flow in fully deregulated energy markets.
- Network security: In the presence of equipment limit violations, the optimal power flow will determine corrective actions in terms of voltage control settings and/or real power control settings to minimize equipment limit violations, i.e., the settings to restore the network to a secure state. Similarly, the optimal power flow can also be used in normal operating conditions to increase the security of the network by increasing operational margins to limits, i.e., by enforcing tighter equipment limits. As an increased security margin can be operationally very expensive, it is typically applied only to a few selected critical equipments.

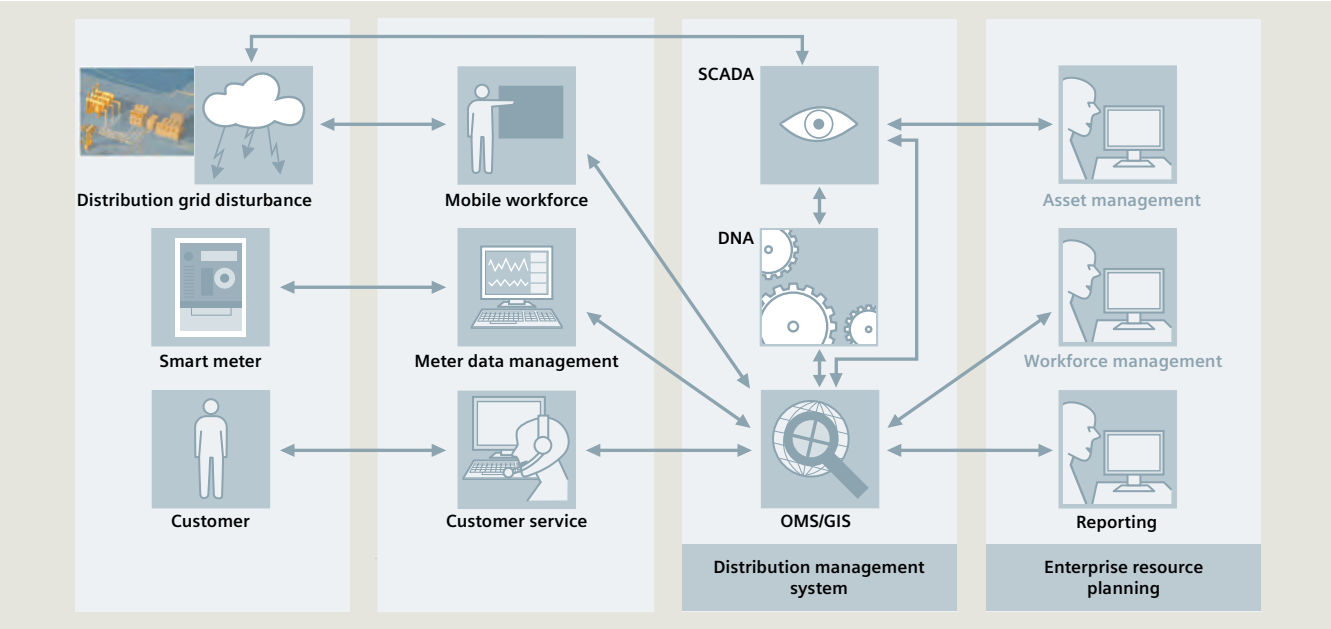

Fig. 7.1-6: Schematic workflow in a distribution management system

The network calculation functions just described can also be used to study network conditions different from actual conditions. This study mode is used, for example, for checking a planned switching operation.

Distribution network management applications

A distribution network is characterized by a mostly radial and lightly meshed structure that is mostly operated radially. The distribution network typically includes a medium voltage (MV) part and a low voltage (LV) part and is interconnected to the transmission network at HV/MV substations. Depending upon countries, few to all of the HV/MV substations are today automated. Under the Smart Grid pressure, automation of the MV/LV substations is now accelerating in Europe, whilst automation of the MV feeders is now accelerating as well in the US. For these reasons, telemetry, e.g., that of power flows, is relatively limited but rapidly increasing (fig. 7.1-6).

Perhaps the most important application in distribution network is the outage management that is responsible for the management of all planned and unplanned outages, the latter part being also referred to as Fault Management. Outage Management integrates information from SCADA (events), metering (events), and customers (trouble calls) to infer one or more concurrent network outages. With the additional help of crews and support from analysis tools, operators are then able to promptly locate faults, isolate faults, and restore service. Outage Management will also provide calculation of performance indices that are typically required by the regulator to assess the performance of the utility towards its customers. Outage Management with the support from analysis tools provides also for the coordination of planned outages with the normal operation of the network to ensure safety of the crews and continuity of service to the customers.

Other applications in the distribution network belong to one of two domains: outage analysis or network analysis. Outage analysis includes typically a fault location application destined at providing the operator with the (visual and descriptive) location of the fault from real-time events using, for example, fault indicators and distance relays, as well as a fault isolation/service restoration application destined at providing the operator with a switching sequence for isolating the fault and restoring service to customers. As the latter may encounter problems meeting all network security constraints and/or restoring service to all customers, one or more switching sequences may be provided to the operator.

Distribution network analysis applications are in many ways similar to those for transmission network, but with a different emphasis due to the specific size, structure and mode of operation of the distribution network. One resulting requirement is the need to support balanced, unbalanced and/or unsymmetrical operation of the network. Due to the limited amount of available measurements and their quality, a distribution load flow with load scaling has been typically used to determine the state of the network. However, as measurement availability increases, this approach is being progressively replaced by a state-estimation-like approach, e.g., load flow in combination with a least square approach to optimally scale loads to the measurements, in order to determine the state of the network. This latter function is referred to as Distribution State Estimation. The solution will then be checked against equipment limits for any violations. This application provides the operator with a complete state of the network, including security risks beyond that available from SCADA. This application's solution is also used by the other network applications to perform further analysis.

For example, optimal power flow will be used to optimize the operation of the network, either towards minimizing network losses by adjusting voltage controls such as capacitors and transformer taps, or towards minimizing network overloads by reconfiguring the network. A short-circuit application, similar to that used in transmission, is also used in distribution to identify security risks against short circuits in different parts of the network. A security analysis application is also appearing in distribution to validate restoration procedures in parts of the network that are under abnormal conditions, the applicability of pre- and post-planned-outage procedures ahead of schedule, etc. As the distribution network is often in constant state of change, a relay coordination application is becoming more and more common to validate or suggest adjustments to relay settings under abnormal network configurations.

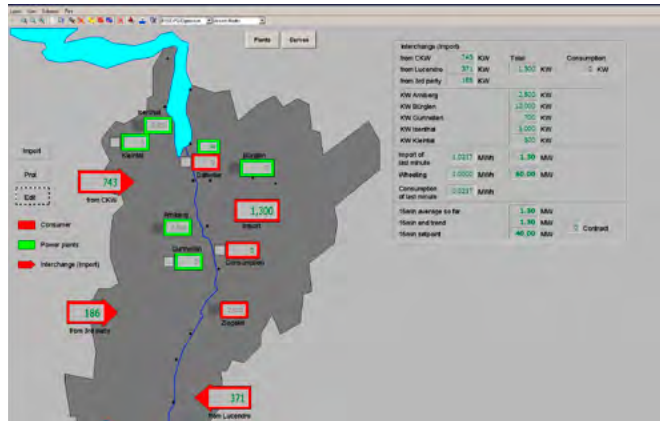

Fig. 7.1-7: Load management overview

Load shedding

To ensure system stability and maximum service availability during periods of very high demand concurrent to generation shortage and/or large disturbances, utilities sometimes have no other alternative but to disconnect some loads. This process is typically referred to as load shedding. It is normally used as a last resort solution after all other alternatives (generation reserve, etc.) have been exhausted. This process is supported by an application called Load Shedding (LS).

Typically, load shedding will be implemented via direct SCADA commands, Load Shedding Controllers (LSC) and/or underfrequency/undervoltage relays. In the last two implementations, configurations/settings may be downloaded from the control center. These two implementations are the fastest (< 100 ms) but require careful coordination (e.g., 2003 US blackout). The following typical load shedding activations are possible:

- Manual load shedding
- Rotating load shedding (generation shortage for extended time)
- Equipment overload load shedding (delay/avoid tripping of equipment)
- Balancing load shedding (import target deviation, islanding)
- Underfrequency/undervoltage load shedding (system stability/voltage collapse).

As conditions return to normal, the load shedding application will also provide support for load restoration, i.e., the manual or automatic reconnection of shed loads.

Load management

As demand has increased much faster than production and network capacity, peak demand has become more and more difficult and costly to meet. Considering also that the network is under-used in other periods (e.g., at night) various incentive programs reducing or shifting consumption have been created that would allow the utility to manage some of that peak load should the need arise.

In this context of balancing demand with production, load serving entities – including distribution utilities – must ensure that energy balancing is met whilst still respecting their energy purchase contracts. This process includes the forecasting of the customer loads, the optimal scheduling (typical cycles of 15, 30 or 60 minutes) of their dispatchable means to meet the forecasted demand and the energy purchase constraints, the monitoring of this plan's execution in real-time (typical cycles are 30, 60 or 120 seconds), and, when necessary, the implementation of corrective actions including load control. The first two steps are implemented using similar tools to those already described earlier albeit with adaptations, that is load forecasting and energy resource optimization. The last two steps will monitor all resources and control those resources available to control towards meeting energy purchase schedules over contractual (tariff) time periods and towards balancing energy as demand fluctuates outside the forecast. The load control that may be required must, of course, account for slow, fast and time-constrained load response.

In the near future, this process will integrate Demand Response, a concept identifying dynamically the loads to be available for such control (fig. 7.1-7).

Training simulator

The growing complexity of existing power systems places increasing demands on operation personnel. Efficient training simulators are therefore required for carrying out the necessary comprehensive hands-on training. The following areas can be covered with training simulators:

- Familiarization of operation personnel with the control system and the existing network
- Training of experienced personnel to changes in network, operating procedures, tools, etc.
- Training of personnel to daily work as well as to emergency conditions (e.g., blackouts)
- Simulation and analysis of operational incidents (post-mortem or anticipated) towards improving on existing operating procedures
- Testing of possible network expansions and analysis of alternatives, testing of new tools and analysis of results, etc.

For the training of personnel, training simulators must reflect accurately the power system behavior and provide to the operator the very same tools, including visualization, as those used in the control center for an effective training. The training simulator includes 4 essential components:

- A training management component
- A power system simulation component
- A telemetry simulation component
- A copy of the management system (EMS, TMS, DMS or GMS).

The power system simulation component is responsible for the accurate simulation of the dynamic behavior of the managed system, i.e., that of all its field equipments (generating units, network and loads). The telemetry simulation component infeeds into the management system copy the simulated field data as they would normally come from field equipments into the control center.

The training simulator provides to the trainee an environment identical to that used in operation, and to the instructor an environment that allows him to create training scenarios, influence (with or without knowledge of trainee) the training session, etc.

Operator Training Simulator (OTS)

OTS is based on 4 key components (fig. 7.1-8):

- A training management component
- A power system simulation component
- A telemetry simulation component
- A copy of the control system (e.g., EMS).

The training management component provides tools for creating training sessions, executing training sessions, and reviewing trainee performance. It provides tools to:

- Initialize the training session, e.g., from real-time or a saved case
- Define the system load profile
- Create event sequences, e.g., a breaker opening, a telemetry failure, etc., that can be either time triggered, event triggered, or command triggered
- Create training scenarios, i.e., a number of event sequences, to be activated during the training.

It also provides start/stop and pause/resume functions for the execution of the training session. During the training session, it is possible for the trainer to create new events and/or modify the running scenario.

The power system simulation component provides a realistic simulation of the power system behavior to support training from normal operation to emergency operation including islanding conditions and blackout restoration. The simulation is based on a long-term dynamic modeling of the power system including:

- Load modeling with voltage and frequency dependency
- Generation modeling with governor, turbine/boiler and generator models
- Frequency modeling
- Voltage regulator modeling
- Protection relay modeling
- External company LFC modeling.

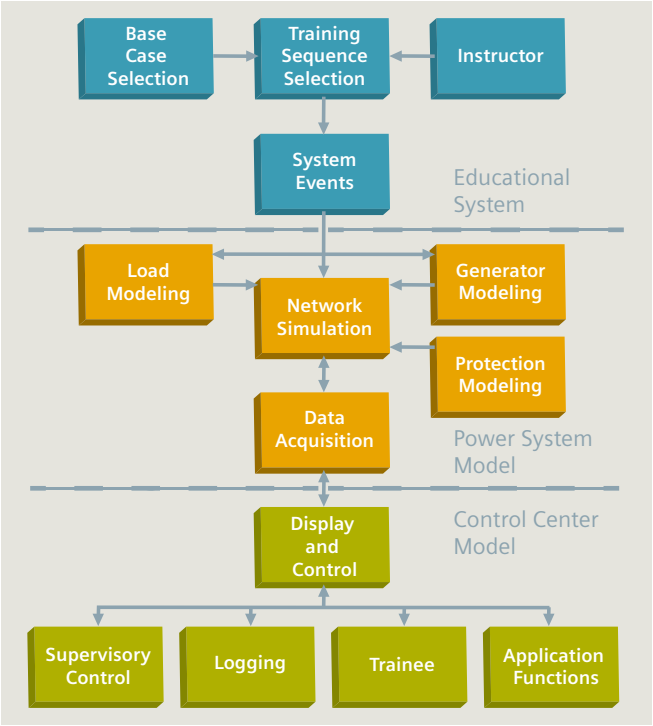

Fig. 7.1-8: Block diagram of a training simulator

The telemetry simulation component provides the simulation of the data communication between the power system and the control system. It transfers as simulated field telemetry the results of the power system simulation to the control system copy. It also processes all commands issued by SCADA (operator), LFC, etc. and transfers them to the power system simulation. This simulated telemetry can be modified via the scenario builder by the trainer to reflect measurement errors, telemetry or RTU failures, etc.

This OTS provides a dedicated environment for the trainee (operator), and one for the instructor that allows the instructor to influence the process in order to force responses from the trainees. The trainee interface is identical with that of the control system so that, for the trainee, there is no difference in functionality and usability between training and real operation.

Multi-utility

Some distribution utilities will manage the distribution of multiple commodities, e.g., electricity, district heating, gas and/or water. Whilst the distribution process, for example, with load management, is commodity specific, interdependencies will be created either by the procurement process or the production model.

It is not unusual to find in distribution cogeneration power plants, also referred to as combined heat and power (CHP) power plants, providing electrical power and district heating. Management of these two highly integrated commodities will require adapted tools accounting for the high interdependencies existing between the production and the demand of these two commodities.

7.1.2 Network Control Centers in a deregulated energy market

As a result of the movement towards deregulation and liberalization of the energy business, the electricity industry has undergone dramatic changes since the beginning of the 1990s. This process has been marked by the following characteristics:

- Competition wherever possible – electrical energy is traded as a commodity. This initially affects power generation, but other services can also be offered on a competitive basis.
- Commercial separation of the natural network monopolies from the competitive elements. This impacts numerous areas, such as planning, operation and maintenance of formerly integrated systems.
- Access to the networks by third parties. This is an essential precondition for open trading in electrical energy via the natural network monopoly.
- Regulation of the network monopolies by a public agency. Because the network is the basis for competition in the electrical energy market, considerable importance is attched to reliable, economical and neutral network operation. In order to ensure such operation, a new regulatory element must be introduced at the same time that other sections of the electricity business are deregulated.

Restructuring models

In a deregulated environment of the type just described, the power companies that traditionally had a vertically integrated structure start to split into companies responsible for power generation (GENeration COmpanies), transmission (TRANSmission COmpanies), distribution (DIStribution COmpanies), and energy service (Load Serving Entities – Service Provider Companies). This restructuring opened the door to many new market players (fig. 7.1-9), such as electricity traders and brokers who purchase energy from GenCos and resell it.

The technically critical part of deregulation concerns the operation of the overall system. Because there is no longer integrated operation of generation, transmission , distribution, and energy service in one business unit, a dedicated organization must take over the responsibility for observing specific electrical energy quality standards such as frequency control, the voltage level, and provision of adequate generation and transmission reserves for emergencies. When implemented independently of all other energy business activities, this organization is referred to as an Independent System Operator (ISO), e.g., in North America, and when integrated with a TransCo it is referred to as a Transmission System Operator (TSO), e.g., in Western Europe. An ISO is typically managing the energy market over a grid that encompasses multiple TransCos whilst a TSO is typically managing the energy market over the grid under its own TransCo's responsibility. ISOs are also referred to as Regional Transmission Operators (RTOs).

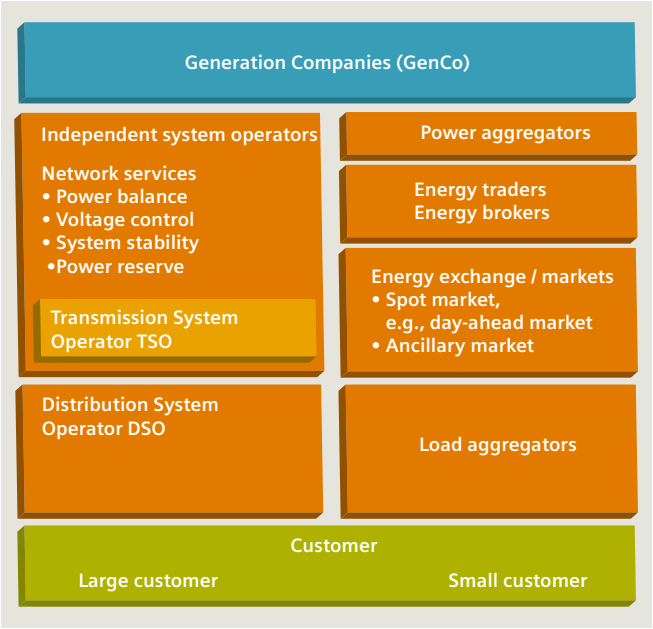

Fig. 7.1-9: Players in the deregulated energy market

The ISO/TSO does not have its own generation capability. Therefore it must purchase regulating energy (active and reactive power) from the power producers. Whilst many energy contracts are established as bilateral contracts, some of the energy can also be bought/sold in an open energy market facilitated by one or more energy exchanges, e.g., the European Energy Exchange (EEX) in Germany. This market model is typically referred to as a spot energy market, and is most common in TSO-structured energy markets for better market transparency and liquidity. Energy markets are often structured along time lines such as day-ahead, intra-day, etc. energy markets, and types such as balancing, reserve, etc. energy markets. The proportion of energy traded on the spot market compared with what is fixed by bilateral agreements can vary from one country to another.

1 2 3 4 5 6 7 8 9 10 11 12 ?

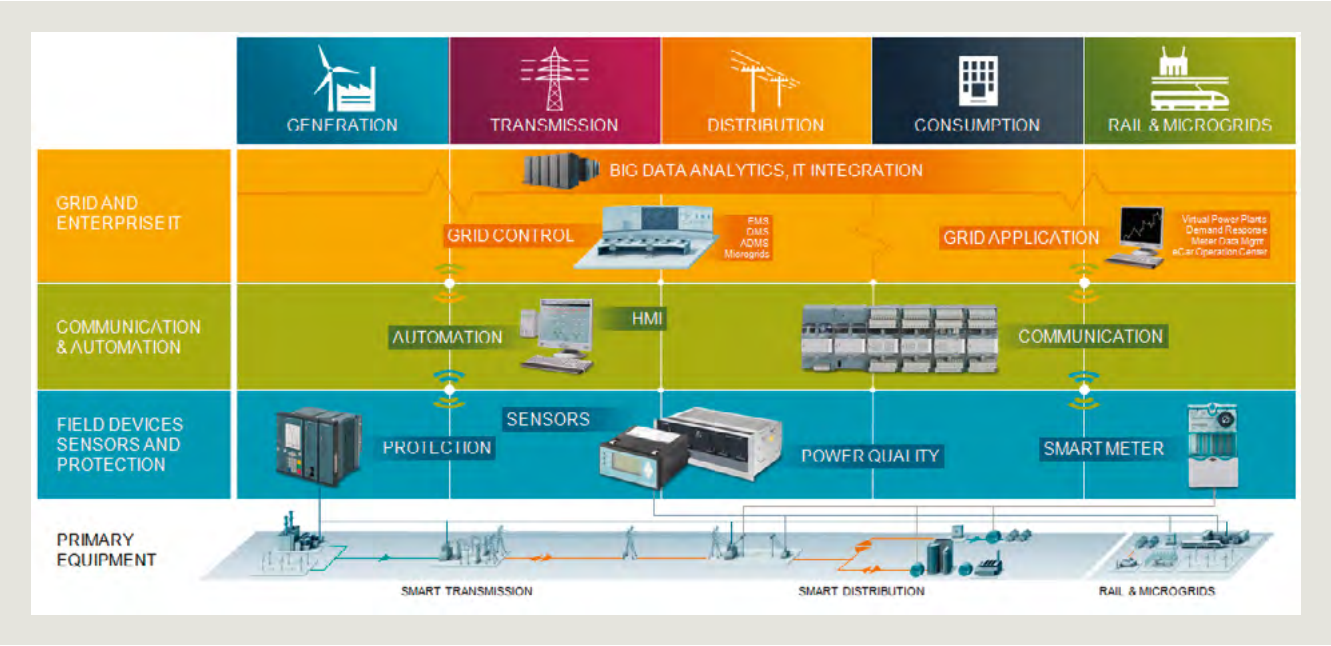

Fig. 7.1-10: Integration on the various process layers

New requirements for network control centers
Energy markets models vary significantly from region to region and typically take many years to reach relative maturity, i.e., stable market rules. There is, therefore, a strong requirement for high flexibility/customization in the proposed market solutions (fig. 7.1-10).

The ISO/TSO whilst responsible for rules that have been enforced for decades are now facing a much more complex process using market mechanisms to acquire the information and means enabling them to enforce these rules; information and means that are now owned and controlled by the many competing market participants. And the ISO/TSO, as it gets access to the data necessary to fulfill his role and responsibilities from the market participants, will need to enforce absolute confidentiality since this data often reflects the positioning of market participants, i.e., market competitive data.

Similarly, network planning necessary to support a properly functioning energy market, i.e., one operating without congestion, has become a real challenge between the ISO/TSO, TransCos and these same market participants.

Last but not least, energy markets require transparency and auditing. Many services that used to be bundled must now be all separately identified and accounted for, detailed market compliance monitoring must be performed, and extensive archiving of it all must be possible.

Communication
As extensive communication between the control center and the various market participants such as power producers, distribution companies, energy exchanges, and traders will increase greatly. Whilst some communication media have been already in use in the control center, the use of open media such as Internet will expand significantly. And the many new market interactions such as network access/capacity requests, ancillary market requests, etc. will require new solutions using this new communication infrastructure. The OASIS system (Open Access Same-Time Information System) for reserving transmission capacity in the United States is an example of an existing system of this kind.

Fundamental changes to the properties of network control systems
Many of the ISO/TSO functions will no longer be self-serving, but instead will serve the market participants towards open and fair access to the network. Whilst many functions will remain the same as those prior to unbundling, many of the tools needed by the ISO/TSO for executing them will rest with the market participants. The ISO/TSO will therefore need to buy the use of these tools from the market participants whilst building its own revenue through network access fees. Many new functions will also be required to support an open and fair access to the network to all market participants, particularly when to manage network congestion (e.g., locational marginal pricing), transfer capacity limitation (e.g., cross-border capacity auctioning), etc.

To guarantee open and fair access to the network and equal treatment between all market participants, many of these functions will be using market mechanisms. This implies that many of the solutions developed for these functions will be financially-driven whilst still addressing the same physical problems, and therefore will require a lot more integration with back office functions such as, for example, settlement.

Network calculations
The basic functions, such as state estimator, load flow calculation, short-circuit calculation, and contingency analysis, will not normally be influenced by the restructuring. However, an application such as optimal power flow considering availability/controllability of generation resources will be affected by the restructuring of the energy business. The total cost optimization of generation is no longer the responsibility of the ISO/TSO, but that of each market participants. But the use of generation (MW and Volt/VAr) whether for security violation relief or network loss reduction, still responsibilities of the ISO/TSO, will require the application to account for the cost of using (variable cost) that resource within the terms agreed in a separate market based process. The cost of availability (fixed costs) is already included in this market based process.

Power generation planning
Power generation planning is no longer the responsibility of the ISO/TSO and therefore no longer considered within the control center. However, its results must be communicated by the market participants to the ISO/TSO for it to assume its network operation and security responsibilities.

This process (fig. 7.1-11 and fig. 7.1-12) is quite elaborate and varies from market to market (e.g., with/without exchange, single/multiple buyer, etc.), but with some constants with respect to the part under the ISO/RTO responsibility. The ISO/TSO basic process consists in collecting all market participants' positions, i.e., their production plans, and validating it against network security whilst satisfying load forecasts and planned outage schedules. In the case network security is not satisfied, market signals are returned to the market participants for a new production plan, and this until network security is satisfied. In parallel or concurrently, the ISO/TSO will also request from the market participants bids to provide power for ancillary services, e.g., regulating power. These bids will be finalized upon a market clearing at the market clearing price. Of course, these bids will be integrated to the load serving energy schedules in the above mentioned network security validation process. These market mechanisms will be, typically, performed at least one day ahead (day-ahead market), and one hour ahead (real-time market) of real-time operation. This process will then be completed on the next day by market settlement to address the actual energy served.

Power generation control
The full set of generation control applications still apply with, however, some adjustments. Indeed, the target generation timetable is now defined by the market participants (see process description above). And the availability and limits of regulating power and reserve power are now defined by the process where the ISO/TSO acquires access to and use of these resources from the market participants (see process description above). The production cost monitoring application is still sometimes used with adjustment to account only for the regulating costs.

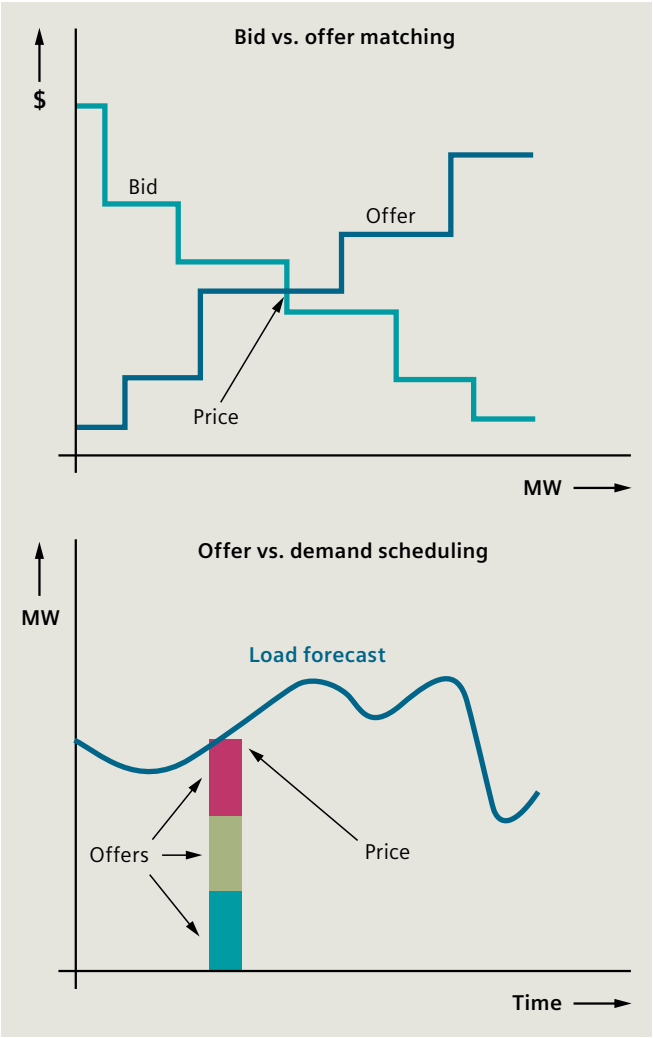

Fig. 7.1-11: Fundamentals

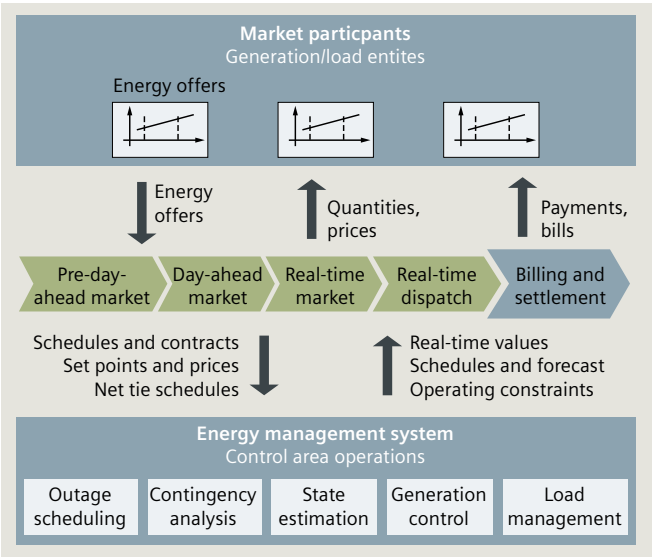

Fig. 7.1-12: ISO/TSO overview

7.1.3 Common Information Model

In order to survive in the deregulated energy market, power companies today face the urgent task of optimizing their core processes (fig. 7.1-13). This is the only way that they can prevail in this competitive environment. One vital step here is to combine the large number of autonomous IT systems into a homogeneous IT landscape. However, conventional network control systems could only be integrated with considerable effort, because they did not use a uniform data model standard. Network control systems with a standardized source data based on the Common Information Model (CIM), in accordance with IEC 61970 and its extensions IEC 61968 (DMS) and IEC 62325 (energy market), offer the best basis for IT integration.

CIM – key to interoperability and openness
The Common Information Model (CIM) defines a common language and data modeling with the object of simplifying the exchange of information between the participating systems and applications via direct interfaces (fig. 7.1-14). The CIM was adopted by IEC TC 57 and fast-tracked for international standardization. In the United States, CIM is already stipulated by the North American Electric Reliability Council (NERC) for the exchange of data between electricity supply companies. The standardized CIM data model offers a very large number of advantages for power suppliers and manufacturers:

- Simple data exchange
- Standardized CIM data remains stable, and data model expansions are simple to implement.
- As a result, simpler, faster and less risky upgrading of energy management systems, and if necessary, also migration to systems of other manufacturers.
- The CIM application program interface creates an open application interface. The aim is to use this to interconnect the application packages of all kinds of different suppliers per "Plug and Play" to create an EMS.

CIM forms the basis for the definition of important standard interfaces to other IT systems. Siemens is an active member of the standardization bodies and the working group in IEC TC 57, playing a leading role in the further development and international standardization of IEC 61970 and the Common Information Model. Working group WG14 (IEC 61968 Standards) in the TC57 is responsible for standardization of interfaces between systems, especially for the power distribution area.

Standardization in the outstation area is defined in IEC 61850. With the extension of document 61850 for communication to the control center, there are overlaps in the object model between CIM and 61850. In order to accelerate harmonization between CIM and 61850, TC57 currently works on a technical report that outlines a technical approach for achieving effective information exchange between power system installations governed by IEC 61850 and business systems integrated with IEC CIM standard data exchanges, based on a selected specific set of use cases, but also with the goal of creating a framework that will extend successfully to other use cases in the future.

Fig. 7.1-13: The Common Information Model as key-enabler for interoperability

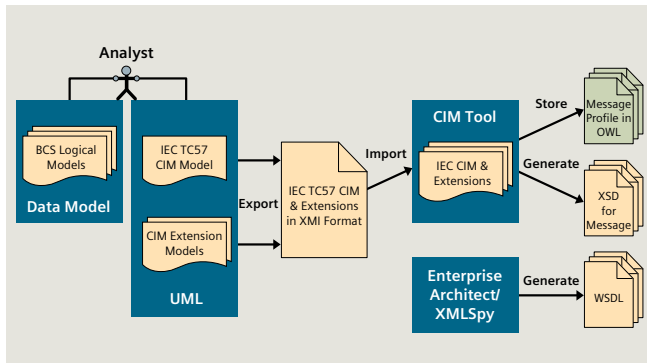

Fig. 7.1-14: Data engineering with Information Model Manager

The primary future challenge is to extend the standard beyond the control center. Once the standard is extended, it will allow full data management and data exchange between the transmission, distribution, planning, and generation areas of the enterprise. Especially urgent at the present time is to move the standard into the newest areas of Smart Grid, Advanced Metering Infrastructure (AMI), and Home Area Network (HAN).

CIM data model and packages
The CIM data model describes the electrical network, the connected electrical components, the additional elements and the data needed for network operation as well as the relations between these elements. The Unified Modeling Language (UML), a standardized, object-oriented method that is supported by various software tools, is used as the descriptive language. CIM is used primarily to define a common language for exchanging information via direct interfaces or an integration bus and for accessing data from various sources.

The CIM model is subdivided into packages such as basic elements, topology, generation, load model, measurement values, and protection. The sole purpose of these packages is to make the model more transparent. Relations between specific types of objects being modeled may extend beyond the boundaries of packages.

Topology model
The electrically conductive connections between the elements are defined via terminals and nodes (connectivity nodes). Every conductive element has one or more terminals. A terminal connects the element, such as a generator, or one side of, for example, a circuit-breaker, to a node. A node can hold any number of terminals and provides an impedance-free connection linking all elements connected to it. A topology processor can determine the current network topology via these relations and with the current states of the circuit-breakers. This topology model can also be used to describe gas, water, district heating, and other networks for tasks such as modeling interconnected control centers.

Measurement value model
The dynamic states of an electric network are displayed in the form of measurement values. Measurement values can contain numerical values, such as active/reactive power, current and voltage, or discrete states such as a 1-switch position. Measurement values always belong to a measurement. A measurement always measures a single physical quantity or a state of the relevant object. It is either allocated directly to the object or to a terminal of the object if it is significant at which end of the object the measurement is made, such as a measurement at the beginning of a high-voltage line. A measurement contains one or more measurement values, e.g., the value transmitted by SCADA, or the value determined by the state estimator or by the voltage/reactive power optimizer. Whether the current value comes from the expected source or is a substitute value can also be indicated if, for example, the connection to the process is interrupted (fig. 7.1-15).

Interoperability tests and model data exchange
Since September 2001, the North American Electric Reliability Corporation (NERC) has prescribed the CIM/RDF/XML format for the exchange of electrical network data between network security coordinators. With funding from the Electric Power Research Institute (EPRI), leading manufacturers of complete EMSs or partial components (ABB, Alstom, CIM-Logic, Langdale, PsyCor, Siemens and Cisco) have started to plan interoperability tests and to develop the tools necessary for this. CIM XML interoperability tests began in December 2000 and take place regularly today. Interoperability (IOP) testing proves that products from different participants can exchange information and provide the interfacing requirements based on the use of the IEC standards that have been developed to date. An additional feature and objective of this and future IOP tests is to verify and validate that changes made to the IEC standards have been implemented and do not prevent or impede data exchange or interaction between the participants. The verification of IEC specification updates is an integral part of the IOP testing process. The IOP test report gets published afterwards and fully documents all the results as well as the issues discovered during testing.

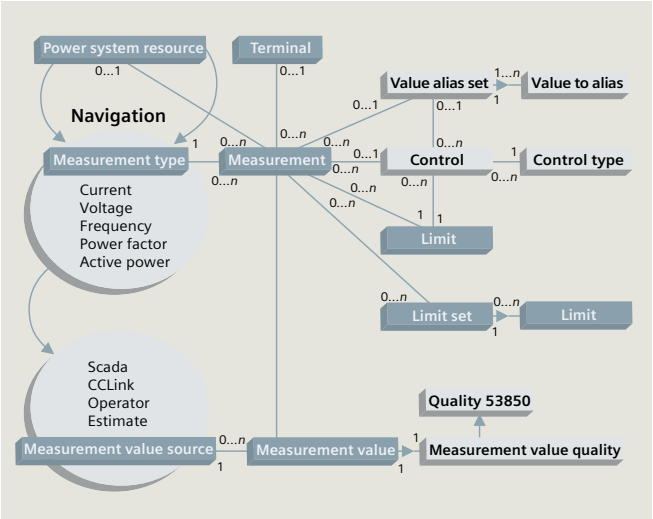

Fig. 7.1-15: Measurement value model

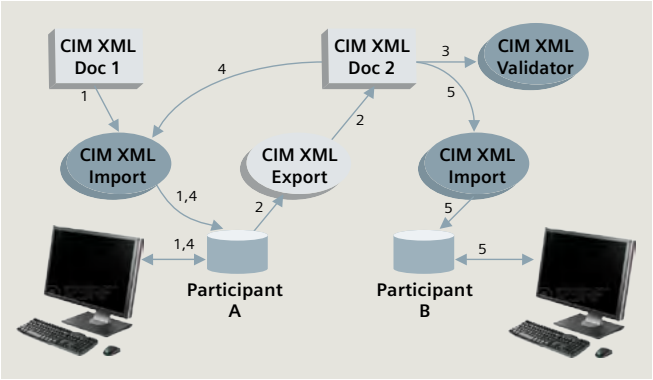

Fig. 7.1-16: Principle of the interoperability test

The principle of the test can be seen in fig. 7.1-16. Participant A imports the test data using the tool, modifies the data, and exports it for further use by participant B. Participant B imports the data, and processes, amends and exports it for participant C, and so on. Some participants provide a model that is used during the IOP testing (for example: Areva 60 Bus Model, GE WAPA 262 Bus Model, SNC-Lavalin 60 Bus Model, and Siemens 100 Bus Model). Typically, full and incremental models are exchanged and validated between the participants. Power flow solution tests are intended to verify the correct exchange of power system model files, including generation and load, through the execution of power flow applications. In addition, specific tests focused on implementing the latest annual IEC standard contents are performed specifically.

7.1.4 IT Integration and Service-Oriented Architecture

In order to survive in the deregulated energy market, power companies today face the urgent task of optimizing their core processes. This is the only way that they can prevail in this competitive environment. The aim is to make the system architecture modular and component-based so that a flexible configuration and IT integration can be implemented in a cost-efficient manner. The crucial step here is to combine the large number of autonomous IT systems into one homogeneous IT landscape. However, conventional network control systems could only be integrated with considerable effort, because they did not use any integration standard as none did exist. Network control systems designed with a Service-Oriented Architecture (SOA) offer the best basis for IT integration.

Open systems through the use of standards and de facto standards

A modern network control system provides the basis for integration of an energy management system in the existing system landscape of the utility through the use of standards and de facto standards.

- IEC 61970 Common Information Model (CIM) defines the standard for data models in electrical networks. It supports the import and export of formats such as XDF and RDF, which are based on the XML standard.
- Web-based user interface, web technology
- Standardized PC hardware instead of proprietary hardware client/server configuration based on standard LANs and protocols (TCP/IP)
- Open interfaces (ODBC, OLE, OPC, jDBC, etc.)
- RDBMS basis with open interfaces
- Nationally and internationally standardized transmission protocols (IEC 60870-5, IEC 60870-6).

Service-oriented architecture

A modern network control system provides a service-oriented architecture with standardized process, interface and communication specifications based on standards IEC 61968 and IEC 61970. They form the basis for integrating the network control system in the enterprise service environment of the utility.

The services of a control system comprise:

- Data services with which, for example, the databases of the core applications can be accessed, e.g., readout of the operational equipment affected by a fault incident in the power supply system.
- Functional logic services, e.g., in order to start a computing program for calculating the load flow in the power supply system.
- Business logic services that coordinate the business logic for specific energy management work processes of the participating systems, e.g., fault management in the network control system within the customer information system at the utility.

The network control system is one of many systems in the IT network of the utility that interacts with other systems and that offers and uses services such as:

- Services forming part of the offered scope of functions of the network control system
- Services that are used by the network control system and are provided by other systems and applications.

Fig. 7.1-17 shows a typical example of the incorporation of the network control system in the enterprise service environment of the utility. Further planning with respect to the required work processes and integration in the heterogeneous system landscape of the utility are based on this incorporation.

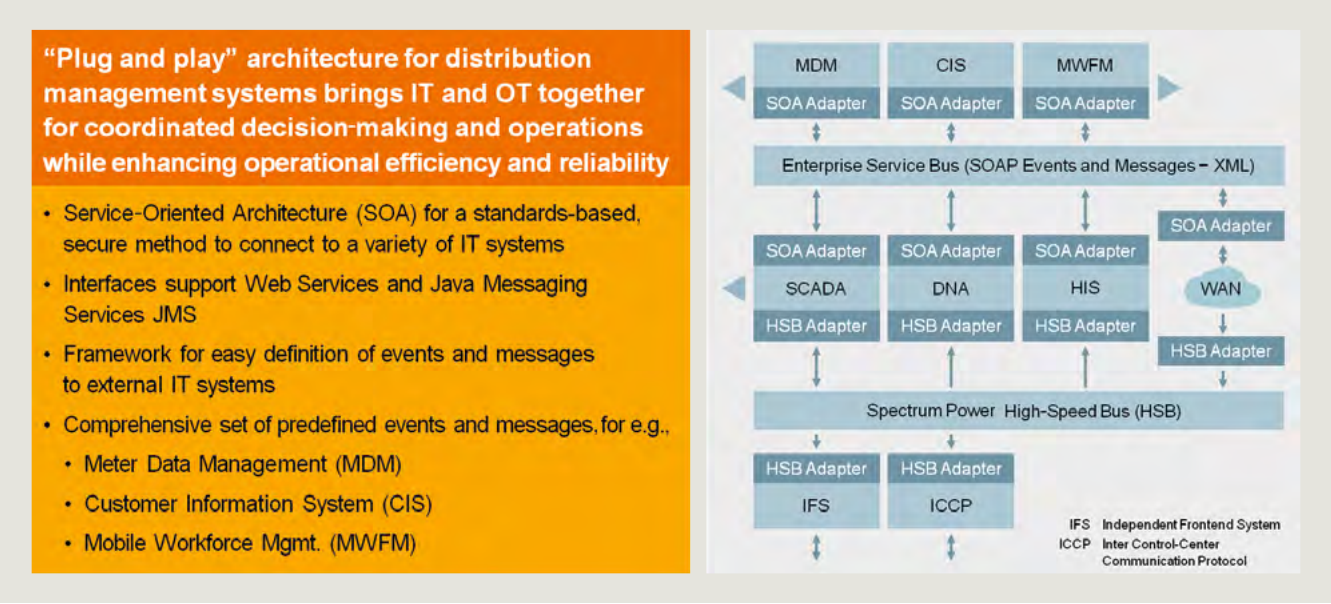

Fig. 7.1-17: Spectrum Power™ SOA (Service-Oriented Architecture): Integration of the network control system in the enterprise service environment of the utility

1
2
3
4
5
6
7
8
9
10
11
12
?

Integration into IT networks

A modern network control system acting as an energy management system fits harmoniously into the IT networks and the existing IT landscape of the utility (fig. 7.1-18). The network control system is one of many systems in the IT network of the utility that interacts with other systems. The following are some of the points defined for the IT integration process:

- Access to the system by Intranet users, e.g., from the back office:
  Configuration for the DMZ (Demilitarized Zone)
- Integration of the corporate network, such as for e-mail notification
- Protected area for the application and SCADA servers
- TCP/IP-based communication to substations or to adjoining control centers
- Configuration of switches/routers
- Configuration of firewalls
- Password protection and requirements.

Fig. 7.1-19 shows an example of the integration of the network control system in the IT network of the utility. It forms the basis for further planning with respect to the tasks required during IT integration in the heterogeneous system landscapes of the utility.

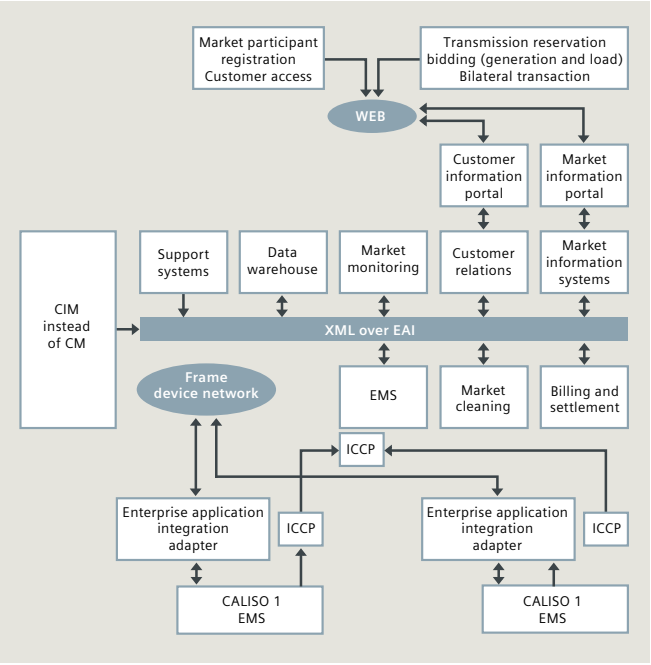

Fig. 7.1-18: Service-oriented architecture of applications in the IT landscape of a large utility

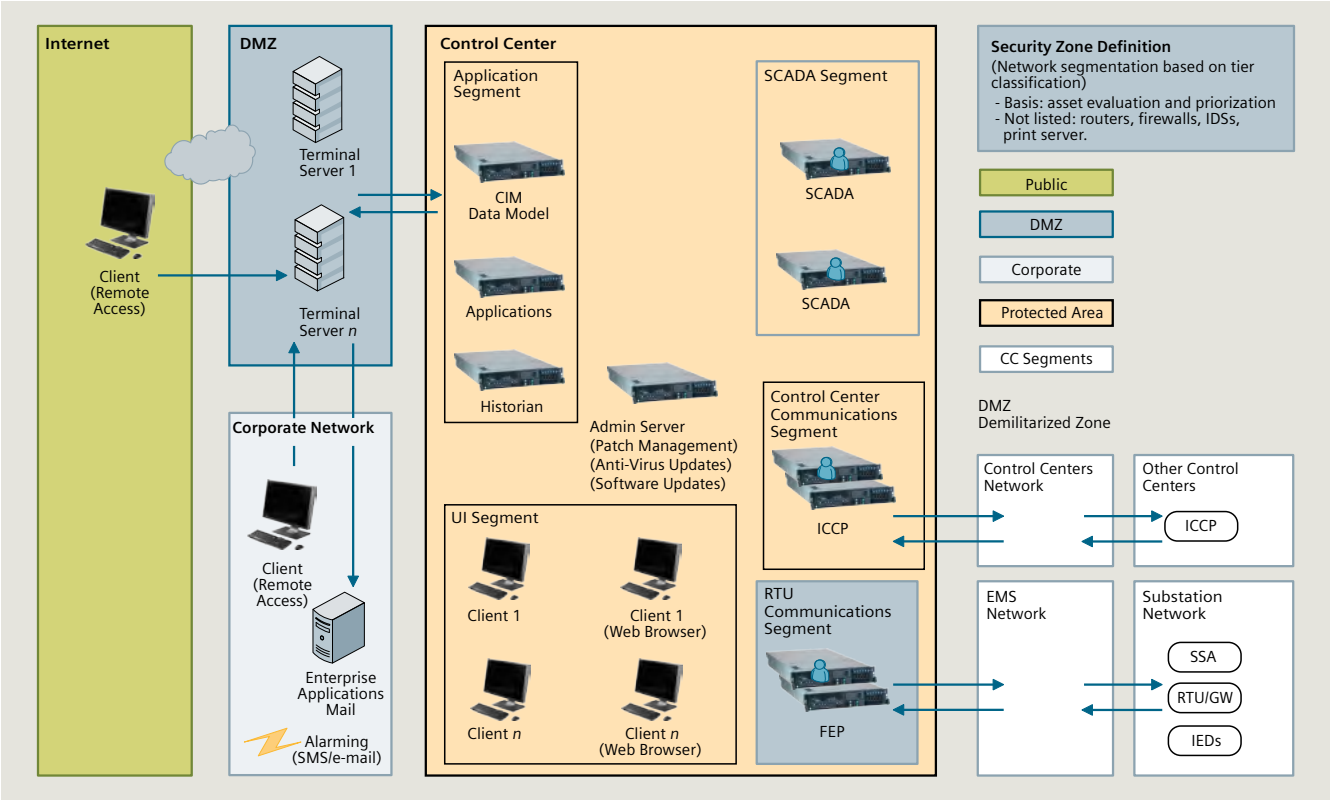

Fig. 7.1-19: Integration of the network control system in the IT network of the utility

7.1.5 Spectrum power™ control systems

Siemens has supplied more than 1,600 computer-based control systems for power systems worldwide. The result of these many years of experience is the development of the product family Spectrum Power™ – control systems for electric power systems as well as for gas, water and district heating networks (fig. 7.1-20).

A Spectrum Power™ control system is divided into various subsystems. On the basis of a minimum configuration for operation, it is possible to add subsystems to meet the other requirements in terms of additional functions, structure and size of the system. With its modular structure, the system can be expanded with little effort, even subsequently. Modules can be replaced, or new modules can be added to implement the required modifications. On the basis of the standard system, open programming interfaces permit individual adaptations and subsequent expansions for new or existing customer-specific components. In a basic configuration, a Spectrum Power™ control system encompasses the following components, which are described in greater detail in the remainder of this section:

- Basic services
  To ensure that the basic functions are provided, such as real-time database services, data exchange and coordination of computers (e.g., redundancy) involved in the control center.
- User interface
  For providing user-friendly, powerful and graphically oriented interfaces to the operator.
- Information model management
  For data entry and data maintenance of network data, single-line diagrams and data exchange with other IT systems.
- Communication front end
  For interfacing the field remote terminal units (RTU) to the process.
- ICCP and ELCOM
  For inter-communication between control centers based on standard protocols (ICCP) and de facto standard protocols (ELCOM).
- SCADA applications
  For implementing the functions required for system operation, i.e., system monitoring and controlling.

In addition to these components, the following subsystems, which are described in greater detail in the remainder of this section, are available for expanding the functionality. They are used and configured to match the tasks and size of the control systems:

- Multi-site operation of control centers
  For the flexible and dynamic system management (modeling and operation) in multi-site configuration.
- Historical information system
  For the archiving and subsequent reconstruction of the process data.
- Forecasting applications
  For the long-, medium- and short-term forecasting of system loads.

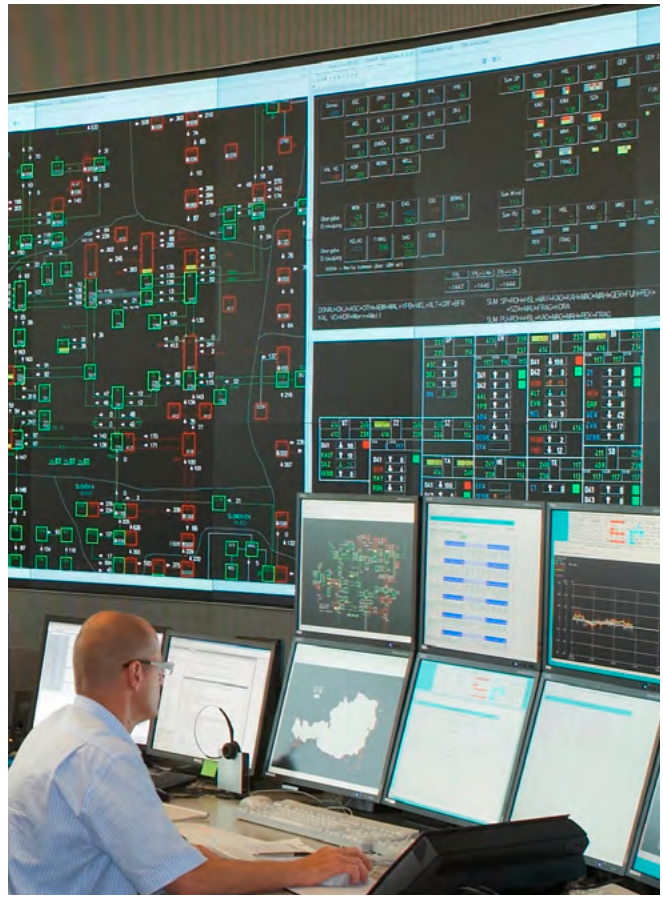

Fig. 7.1-20: Spectrum Power™ control system

- Power scheduling applications
  For optimal resource planning, including commitment and planned dispatch, of the power generating units.
- Power control applications
  For the monitoring and control, i.e., real-time dispatching, of the power generating units participating to frequency regulation.
- Transmission network applications
  For fast and comprehensive analysis and optimization of the transmission network operation.
- Outage management applications
  For efficient management of planned and unplanned outages in the distribution networks.
- Distribution network applications
  For fast and comprehensive analysis and optimization of the distribution network operation.
- Expert system applications
  For supporting the operator in critical and complex tasks in the field of distribution network faults.
- Training simulator
  For training the operator to all range of network behaviors with the tools and user interface as used in operation.

SCADA applications
The SCADA applications group together all Spectrum Power™ functions that are the minimum required to operate a network control center. SCADA contains all functions for signaling, measuring, controlling and monitoring (fig. 7.1-21).

The basic data processing uses preprocessed data of the communication front end for further processing. Value changes are monitored, and data are distributed to other subsystems and written to the operational database. Moreover, calculations, logic operations, and special processing functions for special data types (e.g., metered values) are performed.

Spectrum Power™ control systems use a mature network control concept that reduces the execution time and increases operational reliability. Network control can be performed for any elements of the energy distribution network from any operator station that is set up to perform that task. Individual switching operations and switching sequences can be implemented. Online adaptations of interlock conditions and safety features permit network expansion without interrupting operation (using a preliminary test in study mode). Complex switching operations such as busbar changeover and line switching permit reduced switching times and therefore fast execution of the switching operations. To ensure operational reliability, the network control concept of Spectrum Power™ contains various additional safety features such as checking the various interlock conditions, network reliability monitoring of planned switching operations, and monitoring of network changes during switching operations.

Spectrum Power™ control systems allow the user to freely position temporary network modifications such as temporary jumpers, earth connections, and isolating points online, or to remove them without having to resort to source data management. Temporary network modifications become active in the topology immediately (interlocking, path tracing, etc.). They remain active in topology until they are removed again. The set temporary network modifications can be parameterized.

Switching procedure management provides the control room personnel of a dispatch center with powerful tools for creating, checking and executing switching operations in the network (in the process and study mode). Up to 1,000 switching procedures can be managed; each switching procedure can contain up to 100 actions.

Acoustic alarms and blinking display elements on the screen inform the user about alarms and deviations from the normal state of the power supply system. Logs are used to record alarms and indications. Several logs can be kept. Each log can be assigned to a certain output unit. By using fault data acquisition, the dispatch center personnel and system engineers can analyze the states prevailing in the power supply system before and after a fault. Snapshots, trend data, and state changes are stored in this analysis.

@pjm 2014

Fig. 7.1-21: Large display wall for network operation in a large control center

Interactive topological path tracing allows the operator to determine paths between electrically connected equipment in the distribution network. The network coloring function controls the color display of equipment depending on various properties of individual items of equipment. Partial networks, network groups (e.g., voltage levels) and operating states of equipment (e.g., dead, earthed, undefined) can be highlighted in different colors.

The report generator is an easy-to-use tool for simple and fast creation, management and output of reports. An SQL interface permits direct access to the database of the system. The layout can be configured individually by the operator using the graphic editor (in the formal world view). The user can define variables for dynamic values that are updated automatically when a report is created. Moreover, data views (tables and station diagrams) can be linked in, and their dynamic elements are updated automatically.

Basic system services
The Spectrum Power™ contains various basic functions (services and systems) that govern the fundamental functions required to operate a network management system. Based on the operating systems and relational databases, these functions are used to organize data management, data exchange, and communication between the modules installed on distributed computers.

The multi-computer system is a subsystem that manages communication between distributed computers, and various services for hardware and software redundancy, multi-computer coordination, and system state monitoring. Bidirectional communication between individual programs of the system is possible. The following functions are implemented:

- Management of the operating contexts
- Process operation (normal state of the system)
- Study context (to perform "What if?" studies)
- Test context (system test after data or program modifications)
- Training (context for training simulator)

- Management of computer states
- Redundancy
- Monitoring
- Error detection and automatic recovery
- Data consistency
- Start-up coordination and switchover
- Updating and synchronization of date and time.

The high-speed data bus is a communication system that organizes the link between the user programs and the basic system via standardized interfaces. This communication is provided between individual program modules within a computer. Communication between several computers is conducted via the local area network (via TCP/IP). The high-speed data bus is also used as the link between the modules and the database. Further features are:

- Integrated time processing
- Support of redundant LANs
- Support of the test and simulation mode
- Performance of immediate program activation after delay or cyclically.

The database system of Spectrum Power™ consists of an operational database for real-time operation (process and application data), and a relational database that is used by the information model management. Features of the database system are:

- Standard model for all process and application data
- Incremental data changes
- Import and export of data.

Information model management

The Spectrum Power™ Information Model Management (IMM) is the data modeling, data maintenance, and data exchange tool specifically designed to effectively and cost-efficiently manage the power system model data for the EMS/DMS applications, SCADA, communication to RTUs, ICCP, and other enterprise information (fig. 7.1-22). It provides a single, central location to input and maintain all power system-related data and is fully compliant with the international Standard for a Common Information Model (CIM), IEC 61970. The IMM embraces widely accepted industry standard technology such as a commercial Relational Database Management System (RDBMS) and Extensible Markup Language (XML).

The task of IMM within the power control system is to manage the input of the data of the electric power system into the database, both during commissioning of the system and afterwards for subsequent modifications and extensions of the network (new substations, changes to the network, etc.).

Input and validation of the data is performed in the source database so that current online data and online system operations remain unaffected. Once entered, prepared and checked, the modified set of data can then be activated in the operational database at a time convenient to the operator. Activation means the takeover of modified data from the source database to the operational database, without interruption of system operation and without losing any

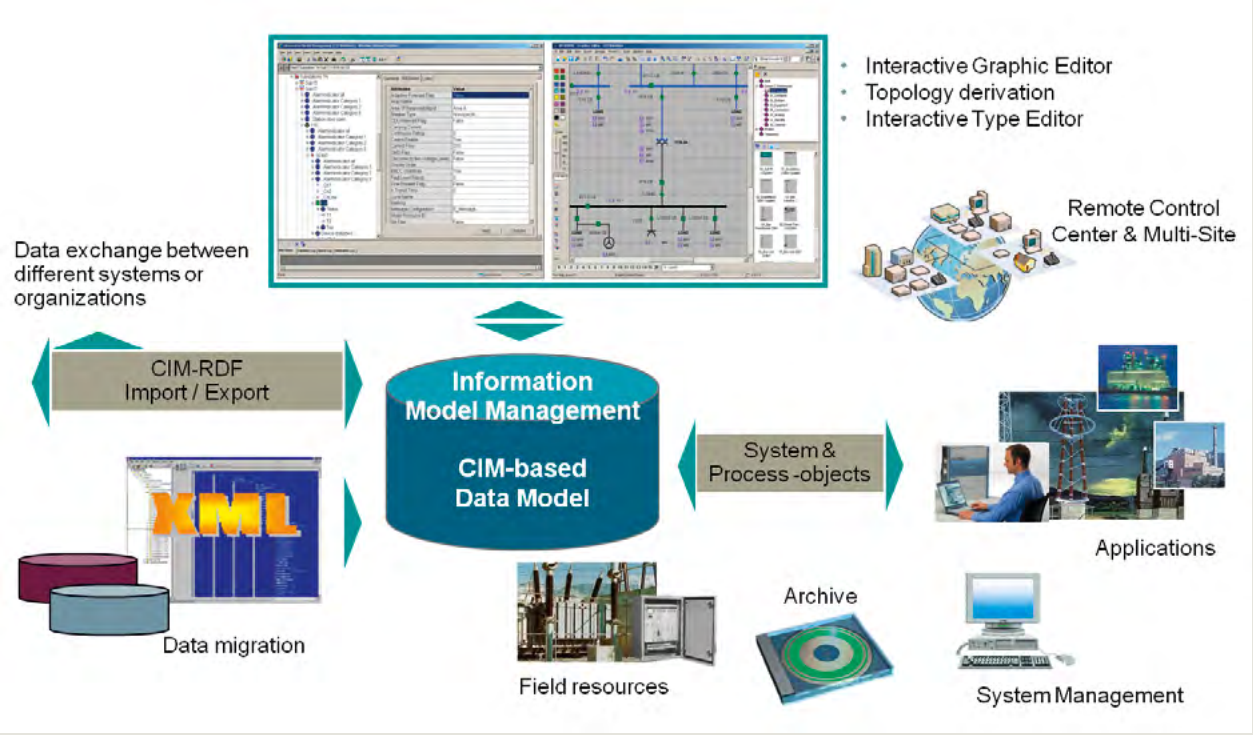

Fig. 7.1-22: The Spectrum Power™ information model management provides the functionality to enter and maintain all power-system-related data

manually entered data. Data activation is coordinated automatically with all other subsystems, servers or activities of a Spectrum Power™ control system.

After activation, newly entered data (e.g., status information, analog values, station feeders, entire stations) can immediately be called up and displayed by the operator.

Modifications that are recognized later as erroneous can be corrected by an UNDO function, because all modifications carried out in the database are automatically recorded in a built-in database change log. Several levels of security-checking functions provide an audit trail for all data changes in the database and guarantee data consistency throughout the entire system.

An integral part of the user interface is the graphics editor. This editor is used to build and maintain the graphic displays used in the system.

All single-line displays of the Spectrum Power™ control systems are worldmaps. A worldmap is a two-dimensional (2D) graphical representation of a part of the real world. Each point in a worldmap is defined by a pair of unique X, Y coordinates (world coordinates). A worldmap is divided into a set of planes. Each plane covers the complete 2D area including the whole range of the unique world coordinates. The first plane is visible over the entire worldmap magnification range. Any other plane is visible within a certain magnification range only, and contains different graphic representations of the technological (real) objects (e.g., plane 2 shows the substation state, plane 3 shows the summary state of the main feeders, plane 4 shows the single-switching states and so on). Planes can overlap magnification ranges of other planes.

IMM provides standardized interfaces for import and export of source data (fig. 7.1-23). Network data and facility data, as well as graphic data, can be imported or exported via these interfaces. The ability to import large or small amounts of data is supported for the purpose of major or minor system updates and the initial loading of the database (bulk loading). The following functions are provided:

- Single point for all data changes. Avoids the necessity of redundant data maintenance within multiple systems and locations.
- Manual data entry or by incremental or bulk data import
- Workflow-oriented views on existing, modified or new data
- Multiple and simultaneous data entry sessions of different users on different Spectrum Power™ user interface consoles.
- CIM-based data model allows easy incorporation of future information types.
- Lifecycle management for planned data modifications
- Data structure version management and automatic data model archiving facilities provides a history of changes as well as an outlook to the planned model at a certain time in the future to reflect the evolutionary nature of models.
- Automatic change detection
- Automatic and on request data validation provides information consistency and secures the integrity of the model.
- Activation of data modifications without impact on Spectrum Power™ runtime system
- Automatic Spectrum Power™ system wide dissemination of data modifications
- Role-based security features and audit records
- Instance-level access rights provide clear responsibilities within the whole data model
- Display (worldmap) editing and automatic generation of displays based on the topology of the network models.
- Report generation
- Hierarchical Model Management supports data maintenance and exchange of modified data in a system of hierarchically arranged control centers in an automated way to prevent model inconsistencies between or within organizations.

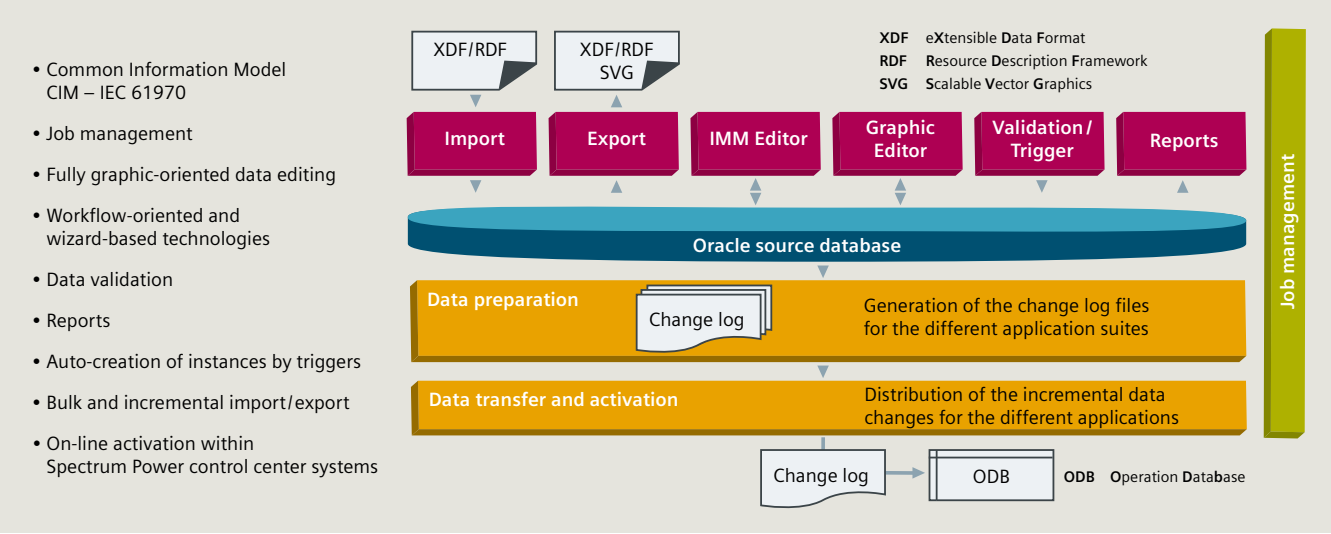

Fig. 7.1-23: Functional overview of Spectrum Power™ Information Model Management

1
2
3
4
5
6
7
8
9
10
11
12
?

Fig. 7.1-24: Typical control room environment

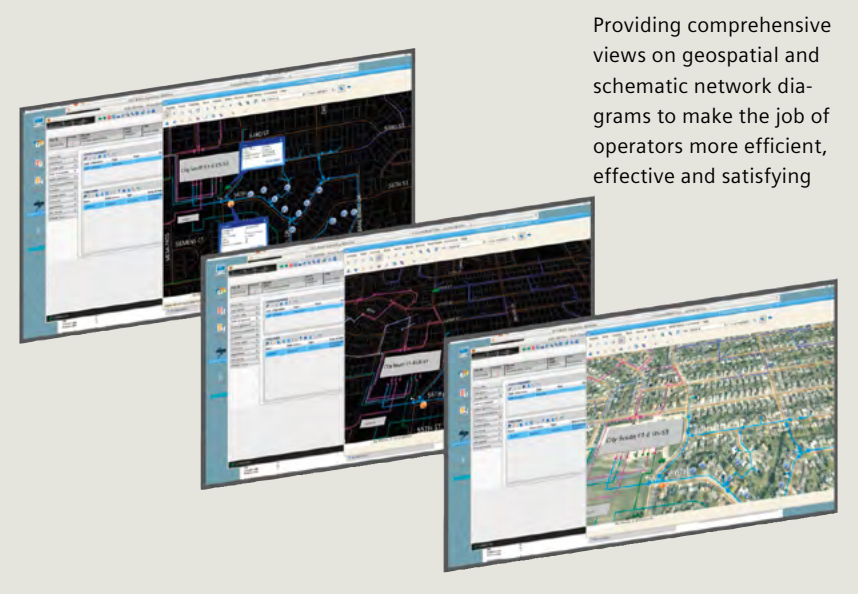

Fig. 7.1-25: Sample visualization of geospatial and network diagrams

Fig. 7.1-26: Sample user interface

User interface
The user interface of the Spectrum Power™ control system provides powerful functions to ensure an overview at all times and to permit fast and easy switching between views across all worldmaps. The user interface allows the user to operate the networks and power plant efficiently and permits the administrator to maintain the database and system parameters. The system uses static and dynamic display elements to display the network structure and network state. The user interface provides means for guiding the operator to the workflows, e.g., by checking the plausibility of switching actions after each operating step. Multi-screen operation using drag and drop supports the operator in having a good overview of the power system and in accessing the required equipment in a fast and comfortable manner (fig. 7.1-24 - fig. 7.1-26).

Communication front end
The remote terminal interface of Spectrum Power™ is the Communication Front End (CFE). It is part of the control center system and communicates with the other subsystems of a Spectrum Power™ control system via the local area network (LAN). CFE has direct access to the remote terminal units (RTU) of various manufacturers. The control center system is connected to the substations or power plants through these RTUs, which transmit process data of the power supply system. The data is preprocessed by the CFE, which exchanges data with the RTU, preprocesses data in real time, and monitors and controls the system, including redundant components.

CFE supports different connections of remote terminal units as point-to-point, multiple point-to-point, and multi-point. The transmission can be spontaneous, cyclic, periodic or scanned. The process interface is able to process several protocols such as IEC 870-5-101 or the metered value protocol IEC 870-5-102. Substation equipment (RTUs, submasters) having a TCP/IP Interface according to the standard IEC 60870-5-104 may be connected via a WAN link directly to the CFE LAN. Both dual channel connections and multi-channel connections are possible (fig. 7.1-27).

The following data are implemented in the process data preprocessing:

- Detection of state changes with image maintenance (old/new comparison of status messages; forwarding only on change)
- Intermediate position suppression (parameterizable monitoring time)
- Plausibility check of all numeric values (error message on invalid data or limit violations)
- Threshold value monitoring of analog values (passed on only if a parameterized threshold value is exceeded)
- Measured value smoothing (parameterizable filtering function)
- Resultant value formation from raw values using specific characteristics
- Renewal check of cyclically transmitted values
- Information type conversion for raised/cleared indication and transient indications
- Time processing and time synchronization. The CFE server regularly receives the absolute time. The substations are synchronized via time signal transmitters or by protocol specific synchronization telegrams. All information is kept internally with a resolution of 1 ms.
- Monitoring of remote terminal units, communication connections and system components.

Communication between control centers with ICCP and ELCOM

The necessity of process data exchange between control centers, often from different vendors, is increasing worldwide. Examples are hierarchical control centers, the interconnection of networks, energy exchange between suppliers or the use of external billing systems.

De facto standard protocols for communication between control centers have been established, e.g., ELCOM-90 or ICCP. The ICCP protocol was defined as an international standard (IEC 870-6 TASE.2) and is now widely accepted and used all over the world.

The Inter-Control Center Communications Protocol (ICCP) is designed to allow data exchange over wide area networks (WANs) between a utility control center and other control centers. Examples of other control centers include neighboring utilities, power pools, regional control centers, and non-utility generators. Exchanged data may include cyclic data, real-time data, and supervisory control commands such as measured values and operator messages.

Data exchange occurs between a SCADA/EMS server of one control center and the server of another control center. The ICCP server is responsible for access control when a client requests data. One ICCP server may interact with several clients.

Access control of data elements between control centers is implemented through bilateral agreements. A bilateral agreement is a document negotiated by two control centers that includes the elements (that is, data and control elements) that each is willing to transmit to the other.

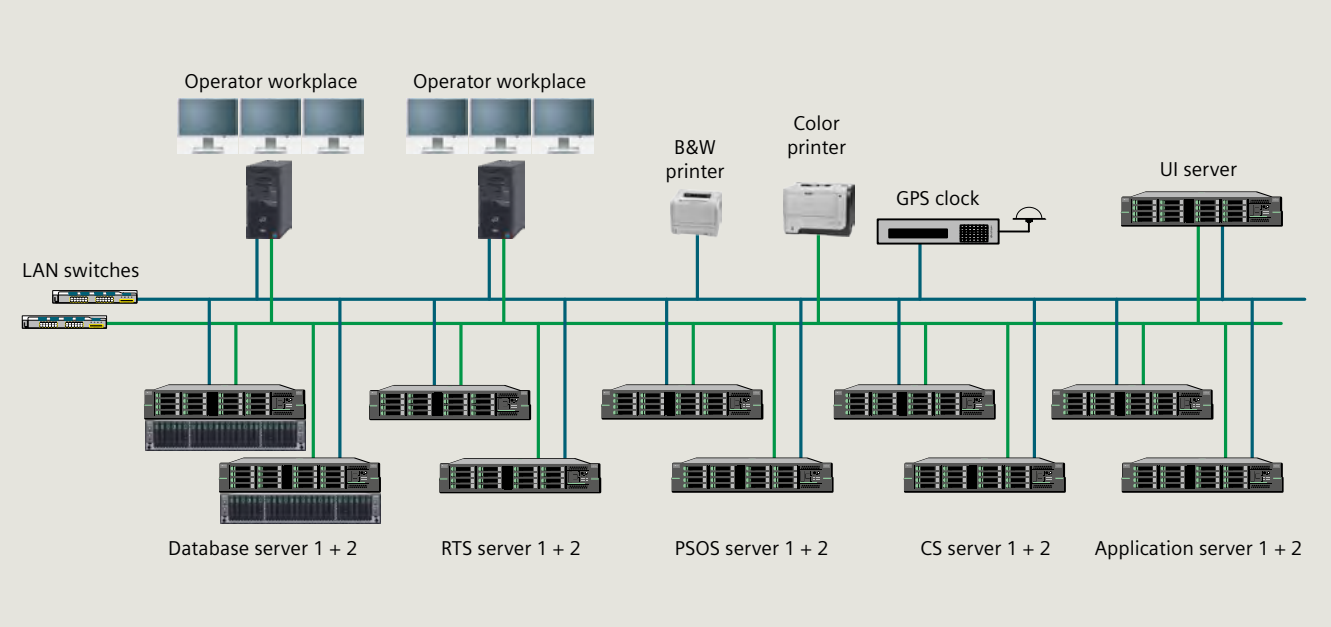

Fig. 7.1-27: Sample hardware configuration of a power control system

The ICCP data link supports a redundant configuration utilizing dual communication servers in active and standby mode. A redundant configuration supports two physically separate paths between the Spectrum Power™ control systems and the remote system to provide backup in the event that the primary data path becomes unavailable.

Historical information system

Storage of process data and processing of historical data is an important basis for various power control system functions (fig. 7.1-28):

- Historical data allows trending and general data analysis
- Forecast applications (for example, load forecast) need a consistent set of historical data as input
- Historical data allows post mortem analysis, for example, in case of disturbances
- Reports and audit trails are generated from historical data
- Historical data is used to restore past scenarios as input for studies (for example, power flow studies)
- Historical data is also an important input to asset management (for example, monitoring of equipment maintenance cycles).

Analog values, accumulator values and calculated values (for example state estimator results) can be stored in the Historical Information System as well as status information and messages (for example, alarms).

The data to be archived is collected from SCADA and applications (for example, state estimator). The data can be collected either spontaneously or at a configurable cycle. Based on the stored data, the historical information system provides aggregations (minimum, maximum, average, integral, sum) and calculations. Missing or incorrect data can be entered or updated manually.

The online part of the historical information system provides the historical data for immediate access. The retention period for this online part is configurable (typically 1 to 3 years). Historical data that exceeds this retention period can be stored to and reloaded from the so called long-term archive.

Multi-site operation of control centers

With the multi-site operation subsystem in Spectrum Power™, the operator is provided with a powerful tool for optimizing operation management. It is possible to transfer network management partially or wholly from one control center to another. Emergency concepts can thus be designed and implemented effectively. Such a capability provides for greater reliability of the system (emergency strategies) and makes a considerable contribution to cost reduction. The multi-site control centers can be configured from two or more control centers and permit a very flexible and dynamic system. In the event of failures, each system continues to work autonomously. After recovery of the communication link, the data is automatically updated.

Energy accounting

Energy Accounting (EA) provides the capability to collect, edit and store generation, interchange, and other energy values on a periodic basis. These energy values are processed from accumulator data collected from the field and monitored by SCADA. EA also performs various aggregate calculations such as the inadvertent energy, calculations of energy values over multiple time periods (e.g., hourly, weekly, monthly, yearly), etc. for reporting and billing purposes. EA provides extensive editing support such as keeping track of original value, changed value, time of change, author of change, etc. for auditing purpose.

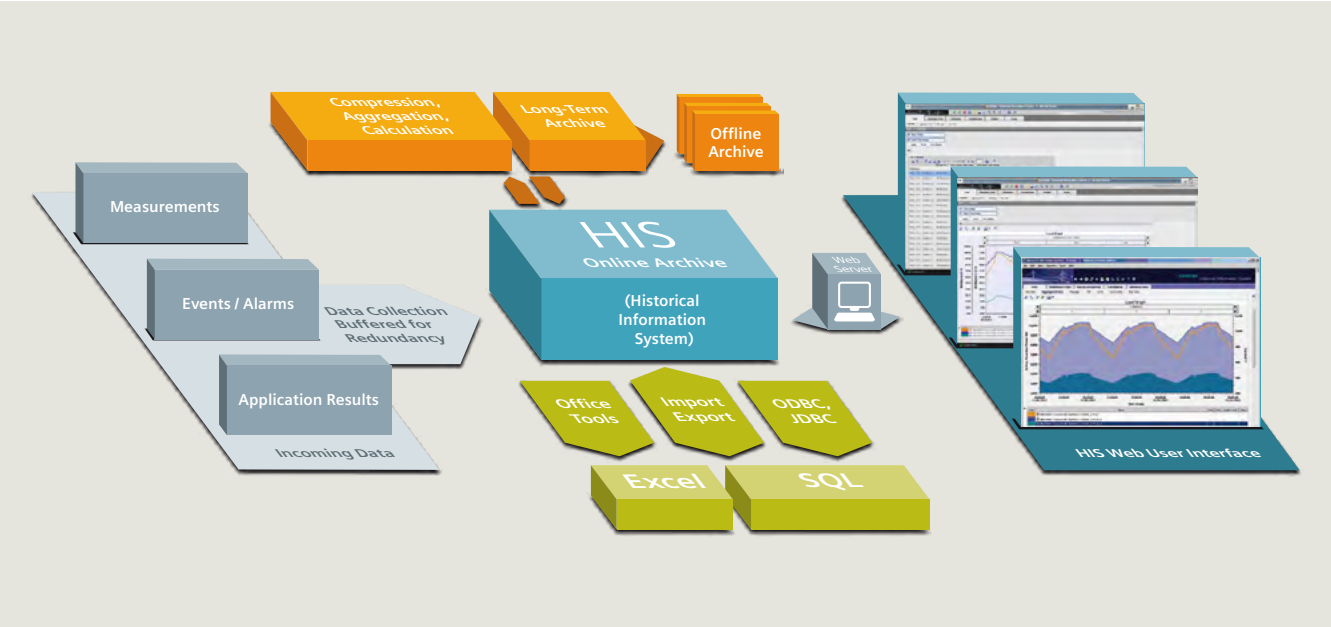

Fig. 7.1-28: Intelligent data archiving solutions for Smart Grids

Load shedding
The load shedding application automatically performs load rejection or disconnection of parts of the network in the event of certain faults and emergencies, in order to maintain system stability. It analyzes the state of the network, detects significant events, defines the load to be shed and prepares the required switching actions. The emergency strategies can be configured individually. Depending on the customer requirements, a configuration can be selected from a simple manual solution to a fully automatic system for dealing with faults and emergencies. The following strategies are possible:

- Manual load shedding
- Rotating load shedding (generation shortage for extended time)
- Equipment overload load shedding (delay/avoid tripping of equipment)
- Balancing load shedding (import target deviation, islanding)
- Underfrequency load shedding (system stability).

7.1.6 Power and generation applications

The aim of the Power Applications (PA) is to support frequency control, i.e., the power system stability (equilibrium between generation and demand), whilst maintaining an optimum generation dispatch and scheduled interchanges across the power system interconnections. The power applications support single area control, multiple autonomous area controls, and hierarchical area control configurations. To enable this real-time process, the power applications provide several functions:

Load Frequency Control (LFC)
LFC provides control mechanisms that maintain equilibrium between generation and demand in real-time. At the heart of LFC is a PI-controller that, combining actual generation, interchange and frequency, calculates the deviation from equilibrium, referred to as the Area Control Error (ACE), and sends accordingly correction signals to the (single, groups of, virtual, etc.) generating units participating to this regulation process, in order to maintain or restore equilibrium. The corrections will be calculated to meet numerous generation unit operating constraints (base/target point, operating and response limits, etc.). LFC will also implement the necessary corrections to satisfy performance criteria defined, typically, by a regulatory body such as NERC in the US or UCTE in Europe (fig. 7.1-29).

In parallel, a performance monitoring function will collect all data related to the performance of such an automatic control according to the pre-specified criteria and store this information for reporting as required by the regulatory body.

Production Cost Monitoring (PCM)
The PCM function calculates, typically, the cost of production for monitoring, e.g., deviations from optimum cost, from planned cost, etc., and for recording purpose. In the case of an ISO/TSO, the function may be configured to include the regulating cost.

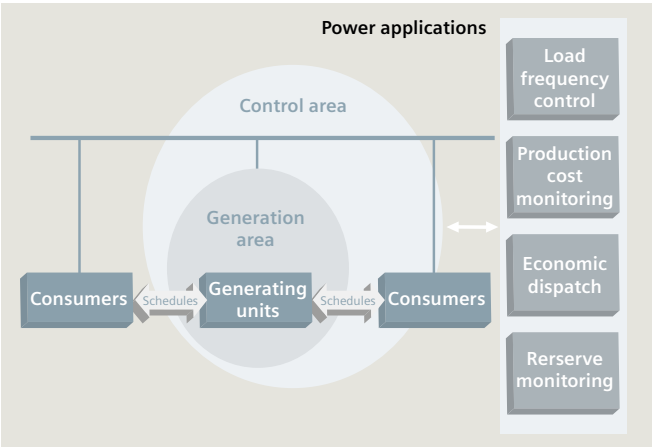

Fig. 7.1-29: Automatic generation control with power applications

1
2
3
4
5
6
7
8
9
10
11
12
?

Reserve Monitoring (RM)
RM calculates reserve contributions to reserve from generation, and interchanges and compares them to the requirements. The requirements are typically defined by a regulatory body to guarantee continued security of operation following the loss of a generating unit or an interconnection. These requirements are divided in 2 or 3 categories, e.g., spinning, secondary and tertiary reserves, characterized by the response time window in which such reserves can be activated. Reserve can include many types of generation and interchange capabilities. For example, peaks would be included in secondary reserve and load shedding would be included in tertiary reserve.

Economic Dispatch (ED)
ED optimally dispatches generation to meet the net interchange, system load, and network losses whilst respecting generation operating limits. Depending on the operating business, i.e., GMS, EMS or ISO/TSO, ED objective will vary from optimizing production and/or regulating costs to optimizing profits. ED will also operates different dispatch modes, each including a different generation set, e.g., online units under AGC control and in economic mode, online units under automatic control, and online units under plant control, etc.

Forecasting applications
Forecasting applications are used for predicting the system (i.e., area and customer group) load, water inflow (hydro), and wind as the basis for generation and interchange planning/scheduling. These applications are also used in support of operation as real-time conditions changes. The load forecast applications further described below supports, besides electricity, also commodities such as water and gas, supports multiple concurrent users and a working forecast environment to allow for review and tuning/adjustments before load forecast is made current for real-time use, and provides for adjustments (e.g., scaling) and tracking mode (i.e., the next few hours of the active forecast are (automatically or on manual request) adjusted based on the observed deviations between the actual measurement and forecast during the last few hours).

Medium-/Long-Term Load Forecast (MTLF/LTLF)
MTLF is used to forecast the load over a period of 1 week up to 2 years, whilst LTLF is used to forecast the load over a period of 1 year up to 5 years. The methods used in both applications are processing historical data with multiple regression analysis (one method is based on the ARIMA model).

Short-Term Load Forecast (STLF)
STLF is used to forecast the load over a period of few days up to 14 days in 30-60 minutes increments. The load forecast supports several prediction algorithms (e.g., Similar Day, Pattern Matching, and Regression Analysis) that can be used separately or in user-configurable combination, and provides the operator with tools to edit the forecast.

Very Short-Term Load Forecast (VSTLF)
VSTLF is used to forecast the load over a 1-2 hour period in short, e.g., 5 minutes, time increments. The method used by VSTLF is based on a neural network algorithm, and its use is divided in two phases: the training phase and the forecast phase. Training is automatically executed periodically, or on request.

Short-Term Inflow Forecast (STIF)
STIF calculates future inflows into a hydrological system. On the basis of this data, the planning function (e.g., hydro scheduling) can calculate the schedule for hydroelectric plant units.

Scheduling applications
The aim of Scheduling Applications (SA) is to optimize the use of individual power plants (thermal, hydro) and external power transactions in such a way that either the total operating cost is minimized, or the total profit on energy sales is maximized after taking all maintenance and operational constraints into account.

The scheduling applications use a sophisticated combination of Mixed Integer Linear Programming and successive Linear Programming. Special techniques are applied to consider non-linear effects and speed up the solution process (fig. 7.1-30).

The scheduling applications include:

Resource Scheduler (RO)
Resource scheduler optimizes either the medium-term generation plan including energy transactions for minimum cost, or the medium-term electricity delivery contracts including energy trades for maximum profit subject to optimal use of energy resources (fuels, water, emission, etc.), to maintenance constraints, to emission rights, etc.

RO therefore determines the optimal generation schedules, the amount of traded energy in bilateral, forward and spot markets, and the corresponding consumption of resources (fuels, emission, etc.).

Hydro-Thermal Coordination (HTC)
Generation Scheduler optimizes the short-term (thermal and hydro) unit commitment and generation plan including energy transactions for minimum cost subject to maintenance, forecasted load, reserve requirement, energy resources (fuels, water, emission, etc.), and emission constraints. Results (e.g., reservoir levels, accumulated fuel consumption, etc.) from the Resource Scheduler at the end of the short-term planning horizon are used as targets by the Generation Scheduler application. Unit Commitment and Hydro Scheduling are integral parts of this application.

Trade Optimizing Scheduler (TOS)
TOS is one way of using HTC determining key figures for the short-term bilateral trading decisions, and for the bidding on the spot markets. The results of this function are the volumes to be bid on the spot markets, or the marginal costs of production. Free capacities and profiles of marginal prices may be obtained by a stepwise variation of demand, which is especially suited for the intra-day business. Detailed results are available for deeper analysis. Specific market models allow the modeling of regulation markets, reserve markets, energy markets, and fuel markets.

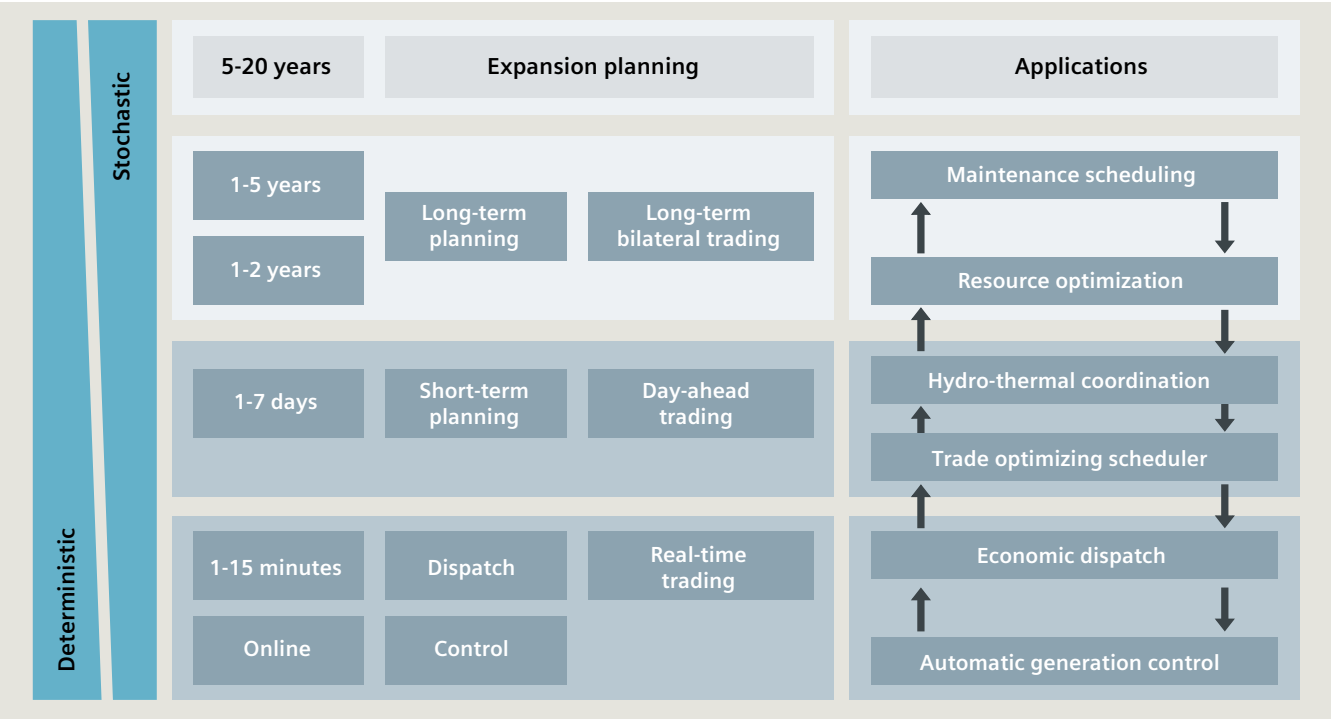

Fig. 7.1-30: Generation management and planning

7.1.7 Transmission applications

The Transmission Network Applications (TNA) suite provides tools for the advanced monitoring, security assessment, and operational improvement of the operation of an electrical transmission network. They are used to:

- Provide a fast and comprehensible assessment of the current state of the network and improve monitoring by/beyond SCADA
- Assess the security against faults and outages
- Provide preventive/corrective measures against planned/existing events
- Optimize operation against costs and losses

These applications considerably increase operational reliability and efficiency in network management. TNA responds automatically to the many different operational (secure, unsecure, emergency) conditions to provide the appropriate support the operator. The application suite will execute, in real-time, periodically, on events, and on operator request as a configurable sequence (fig. 7.1-31). Among many other features, TNA also supports study mode allowing concurrent users to execute different studies including preparing corrective strategies, preparing next day operating plan, analyzing post-mortem operational events, etc.

Network Model Update (NMU)
The NMU integrates all external and internal information, constructs the network topology, and updates accordingly the network data required to create the operating conditions to be evaluated by the State Estimator or the Power Flow, i.e.:

- Gathering data from SCADA and other external sources such as AGC, Load Forecast, and Outage Scheduler (user options in study)
- Performing topological analysis including identification of electrical island(s), energized/de-energized equipment(s), etc.
- Scheduling accordingly all network loads, generations, regulation settings, and limits.

In study mode, the retrieval of data is user configurable and offers additional retrieval options typically not applicable in real-time.

State Estimator (SE)
The purpose of this function is to provide a reliable and complete network solution from the real-time measurements, pseudo-measurements (e.g., non-telemetered loads) from Model Update (MU) and operator entries. The SE will identify the observable parts of the network where real-time measurements are redundant. Using this redundancy, the SE will identify "bad" measurements, remove them from the valid set of measurements, and then solve for the complete network combining, for the portion of the network that is unobservable, isolated measurements and load, generation, and bus voltage scheduled by the MU function. The SE will also alarm the operator of any operational limit violations. It will also enable other applications to develop reliable solutions to specific aspects of network

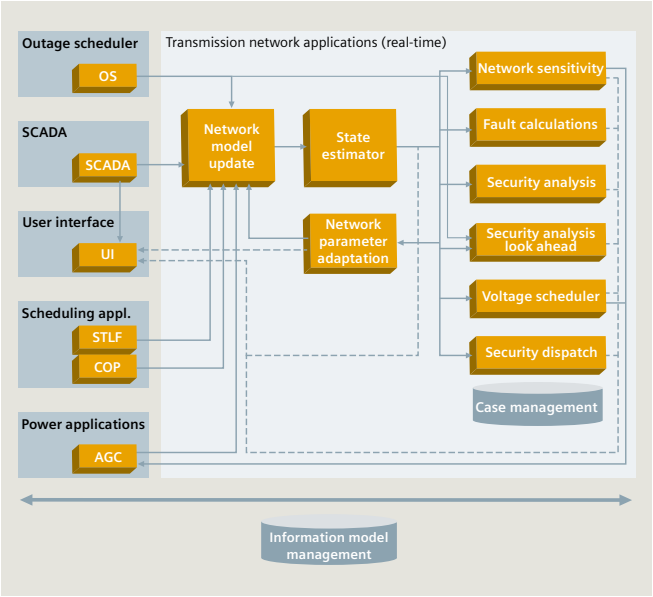

Fig. 7.1-31: Spectrum Power™ TNA real-time sequence

operation (e.g., remedial actions against operational limit violations). The SE features:

- Orthogonal transformation algorithm
- Measurement consistency check
- Chi-Square test with normalized residual or measurement compensation
- Single-pass solution
- Enforcement of equipment limits in the unobservable parts of the network.

Although the SE's essential task is to process real-time data, it can optionally also be executed in study mode for, e.g., post-mortem analysis.

Network Parameter Adaptation (NPA)
The NPA maintains a time-dependent database of adapted network data used by the network model update to schedule net interchanges, bus loads, regulated voltages, and statuses of time-dependent breakers. NPA adapts these network data in real-time via exponential smoothing using the state estimator results. Then,

- in real time execution, the parameters are used by the model update function to schedule loads and regulated bus voltages to be used by State Estimator as pseudo measurements at unobservable buses.
- in study, the parameters are used by the model update function to schedule loads and regulated bus voltages for the user-specified study day-type and hour. The results are then used by the Power Flow.

Dispatcher Power Flow (DPF)
DPF is used to evaluate the network state under various operating conditions in the present or the future such as, for example, tomorrow's work plan. It is used exclusively in study, and typically in conjunction with other applications such as Security Analysis and Optimal Power Flow.

DPF solves either – user selectable – using the Fast Decoupled or Newton-Raphson algorithm. DPF supports, among many standard features,

- continuous (e.g., generator) and discrete controllers (LTCs, capacitors, etc.);
- DC injections and branches (iterative process between DC and AC power flows)
- area interchange control, single/distributed slack, MVAr/MW generator curves, etc.

DPF offers plenty of user-selectable options for full flexibility of analysis.

Optimal Power Flow (OPF)
The OPF is used to improve the system operation under normal (secure) as well as abnormal (unsecure) conditions by recommending control adjustments to achieve either of the following optimization objectives:

- SECURITY: active and reactive security optimization
- COST: active cost and reactive security optimization
- LOSS: loss minimization
- FULL: COST optimization and LOSS optimization.

OPF solves the LOSS minimization using Newton optimization, and the other optimizations using linear programming. OPF supports, among many standard features:

- Constraint and control priorities
- Constraint relaxation (e.g., long-to-medium and medium-to-short limits)
- Load shedding.

OPF offers also plenty of user-selectable options for full flexibility in identifying remedial measures to operational violations, and/or in optimizing secure operational conditions. Depending on the optimization objectives, the OPF applications can be defined as a reactive power optimization or as an active power optimization.

OPF as described here is used only in study, whilst two customized versions described below are provided for real-time use.

Voltage Scheduler (VS)
VS is a real-time application version of the OPF. It determines the optimal use of VAr resources and the optimal voltage profile that should be maintained in order either to minimize operational voltage violations or/and to minimize the network losses. For that purpose, optimal settings of reactive power controls are determined and displayed for implementation.

When the objective is to alleviate voltage violations, minimum shifting of controls from specified setpoints (least-squares shift) is implemented. For that purpose, VS minimizes an objective function consisting of the sum of the quadratic "cost" curves for all control variables. Each such "cost" curve penalizes its related control variable for a shift away from the target value. Weighting of the "cost" curves is performed by a factor specified for each control variable.

Remedial Dispatch (RD)
RD is a real-time application version of the OPF. It determines the optimal use of MW resources and the optimal loading profile that should be maintained in order either to minimize operational overloads or/and to minimize the operating costs. For that purpose, optimal settings of active power controls are determined and displayed for open- or closed-loop implementation. The set of overload constraints can be automatically extended to include branch loading constraints corresponding to critically loaded branches (user specifiable critical loading factor).

Similarly to VS, when the objective is to alleviate overloads, minimum shifting of controls from specified setpoints (least-squares shift) is implemented. For that purpose, RD minimizes an objective function consisting of the sum of the quadratic "cost" curves for all control variables. These "costs" are constructed and handled as described for VS.

Basically, RD provides optimal dispatch similarly to conventional economic dispatch (ED). Compared to ED, however, it is extended to also take into account network loading constraints. This is particularly useful in usually highly loaded systems as well as during exceptional load situations, e.g., due to outages of generating units or transmission lines.

Security Analysis (SA)
The purpose of this function is to determine the security of the power system under a very large number of contingencies (e.g., n-1 criteria). Contingency evaluation in large meshed transmission networks is an exhaustive task, because a lot of contingencies (single outages and multiple outages) have to be studied in order to get a reliable result. On the other hand, usually only very few of the possible contingencies are actually critical, and therefore a lot of computation effort could be wasted. To overcome this difficulty, a two-step approach is used. The two sub-functions of SA are as follows:

- Contingency Screening (CS) provides a ranking of contingencies from the contingency list according to the expected resulting limit violations. For that purpose, a fast power flow calculation (user definable number of iterations) is performed.
- Contingency Analysis (CA) checks contingencies from the ranked list produced by the CS sub-function. For each of those contingencies, a complete AC power flow is performed.

Security analysis supports, among many features,

- user specified contingency and monitored equipment lists
- single and multiple contingencies
- automatic simulation of contingencies corresponding to the real-time violations
- conditional contingencies
- load transfer and generator reallocation
- modeling of regulating controllers (LTC, ...)
- contingency screening bypass.

Security Analysis Look-Ahead (SL)
SL provides the very same function as SA but merges, to the base case, outages from Outage Scheduler that are scheduled within a configurable time window from real time. SL provides the operator with the security impact from these scheduled outages on real-time operation (which may differ from the conditions used to validate the scheduling of the outage). In case the scheduled outage puts real-time operation at risk, the operator can decide whether to cancel the outage, reschedule the outage, and/or take preventive measures to allow the scheduled outage to take place as scheduled.

Network Sensitivity (NS)
The purpose of this function is to support calculation and management of loss penalty factors for use by Power Applications (PA) and Scheduling Applications (SA). Penalty factors are used for taking network transmission losses into consideration when dispatching generation whilst minimizing total cost. This NS function is executed automatically as part of the real-time network application sequence. It calculates, for the current network state, the sensitivity of system losses to changes in unit generation and interchanges with neighboring companies. It, then, maintains, using exponential smoothing, a database of such loss sensitivities for a number of system load ranges and net interchange ranges. In real-time mode, NS operates from the network solution produced by the state estimator function, and in study mode from that produced by the dispatcher power flow function.

Fault Calculation (FC)
The purpose of this function is to calculate the fault current and fault current contributions for single faults and multiple faults (user selection). Fault rating violations at and near the fault are provided to the operator. The short-circuit values are compared against all circuit-breaker ratings for each circuit-breaker connected to the faulty bus. Fault current contributions from branches and generating units near the faulted bus are also calculated and may be compared against their respective fault ratings. FC includes, among many features, the effects of mutually coupled lines, the modeling of fault and fault-to-earth impedance and the combination of a fault with a single branch outage.

Operator Training Simulator (OTS)
OTS is based on 4 key components (fig. 7.1-8, page 434):
- Training management function
- Power system simulation
- Telecontrol model
- Power control system (copy).

The training management component provides tools for creating training sessions, executing training sessions and reviewing trainee performance. It provides tools to:
- Initialize the training session, e.g., from real-time or a saved case
- Define the system load profile
- Create event sequences, e.g., a breaker opening, a telemetry failure, etc., that can be either time triggered, event triggered or command triggered
- Create training scenarios, i.e., a number of event sequences, to be activated during the training.

It also provides start/stop and pause/resume functions for the execution of the training session. During the training session, it is possible for the trainer to create new events and/or modify the running scenario.

The power system simulation component provides a realistic simulation of the power system behavior in order to support training from normal operation to emergency operation, including islanding conditions and blackout restoration. The simulation is based on a long-term dynamic modeling of the power system including:
- Load modeling with voltage and frequency dependency
- Generation modeling with governor, turbine/boiler and generator models
- Frequency modeling
- Voltage regulator modeling
- Protection relay modeling
- External company LFC modeling.

The telemetry simulation component provides the simulation of the data communication between the power system and the control system. It transfers as simulated field telemetry the results of the power system simulation to the control system copy. And it processes all commands issued by SCADA (operator), LFC, etc. and transfers them to the power system simulation. This simulated telemetry can be modified via the scenario builder by the trainer to reflect measurement errors, telemetry or RTU failures, etc.

This operator training simulator provides a dedicated environment for the trainee (operator), and one for the instructor that allows the instructor to influence the process in order to force responses from the trainees. The trainee interface is identical with that of the control system so that, for the trainee, there is no difference in functionality and usability between training and real operation.

1
2
3
4
5
6
7
8
9
10
11
12
?

7.1.8 Distribution applications

In distribution networks, the telemetry is relatively limited; the fault rate is high as well as the frequency of changes in the network. To meet these requirements, Spectrum Power™ provides powerful functions with which the operator can operate the distribution network effectively and efficiently (fig. 7.1-32).

Fault Management (FM)
Fault management is a set of applications used for locating system incidents and providing fault (or planned outage) isolation and service restoration in distribution networks.

The main Fault Management functionality consists of:

- Fault location
  Locating the faulty section or area of the network as closely as possible
- Fault isolation
  Isolating the planned outage or the faulty section or area of the network
- Service restoration
  Restoring power to de-energized non-faulty areas of the network
- Fault isolation and immediate restoration
  Isolating faulty areas and immediately restoring power to de-energized areas of the non-faulty or isolated network
- Restore to normal or pre-fault state
  Restoring a selected number of switches to their normal state or pre-fault state.

Fault location, as a part of the Fault Management application, helps to locate permanent faults. Outage faults (for example, short circuits) as well as non-outage faults (for example, earth faults) are considered. Fault location is performed by using remotely controlled and manually updated information (communicated by the field crews) from, for example, protection devices and fault indicators. Fault Management localizes the faulty section as closely as possible, based on available real-time data from SCADA and/or field crews. Measurements from impedance fault relays can be utilized to locate the faulty section more accurately.

The isolation function is performed to determine a set of switching operations to isolate an area of the network.

It can be initiated by the location of the faulty segment or area, or by selecting sections directly on the user interface. The purpose is to isolate sections or areas of the network specified by the isolation request to minimize the outage effect on the network.

Service restoration provides a possible choice of switching procedures to restore service. For each switching procedure suggested by the restoration tool, performance indices are calculated based on the network conditions.

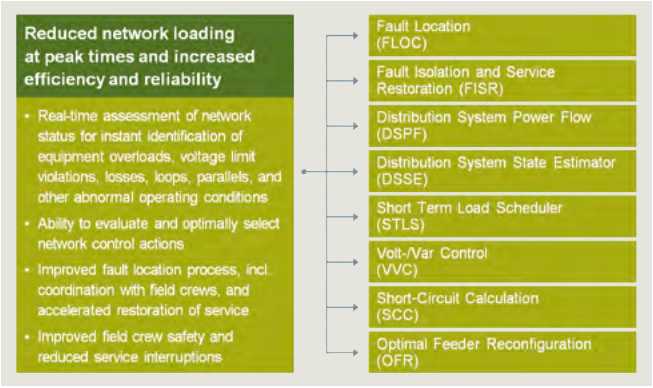

Fig. 7.1-32: Reliability, safety, efficiency: the advantages of advanced distribution network operation with Spectrum Power™ DNA

The user can select the way of ranking of suggested switching procedures according to one or more performance indices and select the best one for service restoration.

Fault Management switching procedures are typically transferred to a Switching Procedure Management (SPM) application for further processing, that is, edit, review and implementation.

Fault isolation and service restoration can also be used for sections isolation due to maintenance work.

Outage Management (OM)
is a collection of functions, tools and procedures that an operator/dispatcher uses to manage the detection, location, isolation, correction and restoration of faults that occur in the power supply system. OM is also used to facilitate the preparation and resolution of outages that are planned for the network. These processes are used to expedite the execution of the tasks associated with the handling of outages that affect the network, and provide support to operators at all stages of the outage lifecycle, starting from events such as the reception of a trouble call or a SCADA indication of an outage, and extending until power is restored to all customers (fig. 7.1-34). This process is used to solve the outage regardless of whether the outage is at the level of a single distribution transformer providing power to one or a few energy consumers, or at the level of a primary substation providing power to many energy consumers. All operations, authorizations and comments that occur in these processes are documented and collected in outage records. This information is made available to external sites for further statistical analysis and processing. OM provides the automatic processing of an outage record used to monitor changes in the network, and has an internal interface to Crew Management (CM), Switching Procedure Management (SPM), and Trouble Call Management (TCM). Data communication to external applications is enabled through Service-Oriented Architecture (SOA) adapters.

Prediction Engine
A further beneficial feature is the Prediction Engine. It evaluates trouble information from all available sources, e.g., generated manually or by external applications such as Customer Information System (CIS), Interactive Voice Response (IVR), or by corporate websites, and is able to relate those calls to a service point and associated transformer. While doing this, trouble calls are grouped and associated to a predicted outage event based on configurable rules and heuristics. OM provides the operator with customer-related information about the outage; the customer's data and outage information is always logged (fig. 7.2-33). The user has the opportunity to manually push a grouped outage upstream or downstream, forcing it to group respectively to a common device or disperse into multiple predicted outages.

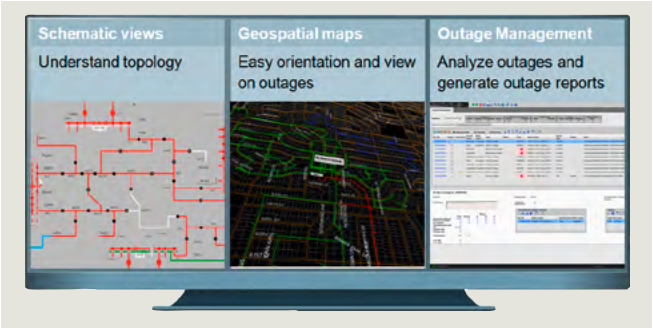

Fig. 7.1-33: Distribution SCADA, outage management and advanced fault and network analysis operated under one common user environment

Storm Mode
During certain peak conditions (e.g., extreme weather conditions), the OM must provide the capability to handle the large number of trouble calls from customers or via smart meters, and guide and support the operator to focus on most important events. By activating the Storm Mode, the Prediction Engine changes the rule settings appropriately, for example:

- Suppress those Meter Data Management (MDM) messages and deactivate them from the Prediction Engine calculations that are related to already known outages.

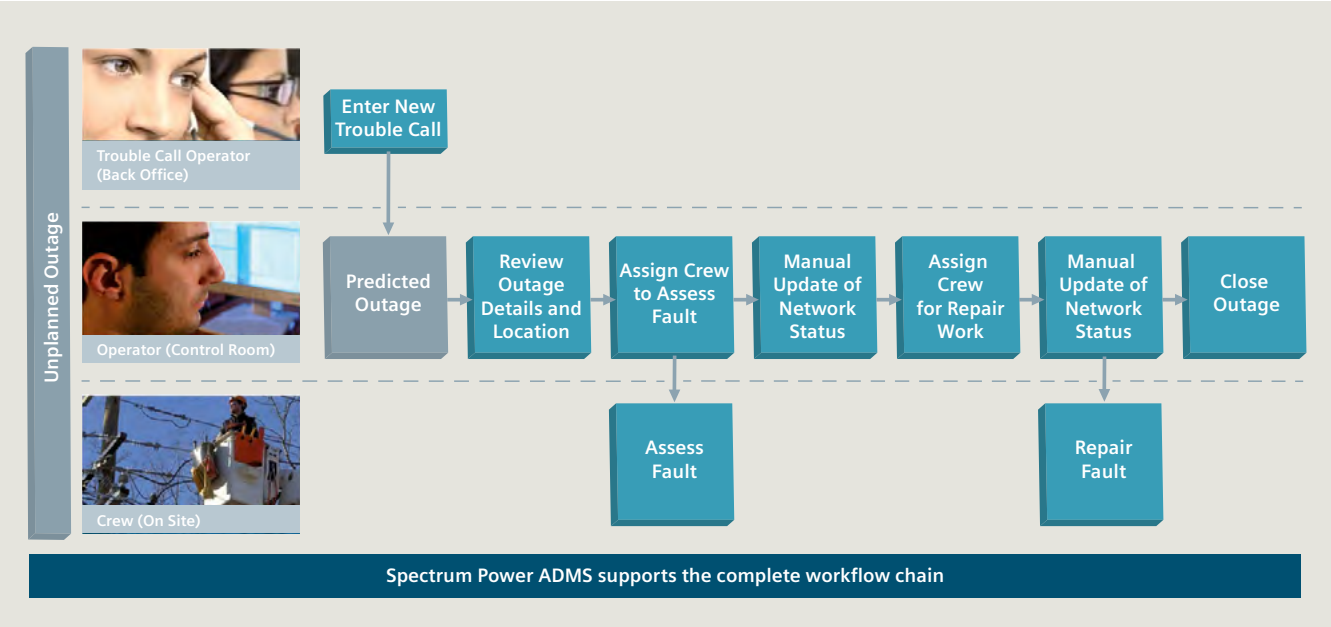

Fig. 7.1-34: A typical workflow in managing the distribution grid

- Filtering for more severe outages by increasing the threshold for notified trouble calls or AMI signals that are required to move a predicted outage location upstream.
- Suppress local service outages from appearing on the geospatial worldmaps.
- Queue up trouble calls for a defined period of time before using them for prediction.

Switching Procedure Management (SPM)
SPM allows the operator to create, edit, select, sort, print, execute and store switching procedures. Entries in a switching procedure can be created manually by recording the operator's actions in a simulation mode, by modifying an existing procedure, or by recording the operator's actions in real-time mode or automatically with applications such as FISR and the OM system. The switching procedure management capabilities can be used to prepare, study and execute clearance operations. It can also be used to execute switching operations to alleviate fault conditions and to restore power following a fault, as well as to optimize the network operation. SPM provides management capabilities via summary displays and easy-to-use menus.

Crew Management (CM)
The Crew Management (CM) is the central tool in Outage Management to display and manage all information related to the definition and composition of utility field crews. CM enables the user to manage the team allocation, assign equipment and vehicles, view team members professional expertise, as well as the contact information, define shift-plans and manage the crews workplans.

Furthermore, CM provides the means to communicate with crews efficiently by sending and receiving text messages or exchanging files with crew instructions.

Trouble Call Management (TCM)
The Trouble Call Management (TCM) function of Spectrum Power provides convenient access to information necessary for entering, tracking, and reviewing trouble calls. TCM provides an interface for utility personnel to record trouble call information when answering customer telephone calls reporting loss of power or other problems in the field. TCM works closely with the other OM tools, such as Prediction Engine and Outage Management, for outage identification, tracking, and resolution. There are various interface possibilities to connect external system generating trouble calls like Interactive Voice Response (IVR), Customer Information System (CIS), Meter Data Management (MDM), or corporate websites.

Distribution network applications
The Distribution Network Applications (DNA) provide fast and comprehensive analysis and optimization of the current distribution network state. The Distribution System Power Flow (DSPF) calculates voltages (magnitudes and angles) for all nodes (busbars), active/reactive powers for slack buses, and reactive power/voltage angles for nodes with PV generators. All other electrical result values are calculated from the node voltages and branch impedances/admittances after DSPF is solved. The most important result values are flows (powers kW / kVArs and currents A) through lines and transformers, and active and reactive power losses that allow to detect potential limit violations.

DSPF is used to calculate the network statuses under different load conditions and configurations:
- Calculate the actual state of the distribution networks using real-time measurements and the current topology
- Calculate the state of the distribution network in the near future (look-ahead) with actual topology but load values of the given time
- Study the state of the distribution network in the near future with different topology (i.e., according to planned maintenance) and the load values of the given time.

Distribution System State Estimator (DSSE) provides a solution for monitoring the actual operating state of the network and to provide a complete network solution for further analysis, for example, optimization of voltage profile.

DSSE provides the statistical estimates of the most probable active and reactive power values of the loads using existing measured values, switching positions, and initial active and reactive power consumption of the power system loads.

The initial active and reactive power values of the loads are provided by static load curves or load schedules (generated based on load curves and measured values/meter readings). Further DSSE estimates the real-time network operating state using measured values.

DSPF and DSSE can handle both symmetrical balanced as well as unsymmetrical unbalanced distribution systems.

The results of DSPF/DSSE are presented on network diagrams and in tabular displays.

Short-circuit calculation
The Short-Circuit Calculation (SCC) helps operator to detect possible problems regarding short circuits, to check capability of circuit breakers, and to check if earth-fault currents are within the limits. Based on the results and warnings of SCC, the user can initiate or reject changes of the network topology.

SCC solves symmetric or asymmetric faults in symmetrical balanced as well as in unsymmetrical unbalanced distribution networks. The SCC function is used to determine:
- The maximum short-circuit current that determines the rating of electrical equipment (normally a circuit-breaker for real-time SCC)
- The minimum short-circuit current that can be a basis for the protection sensitivity checking or fuses selection
- Fault current calculation at selected locations.

The following fault types are supported, and each of them may contain fault impedance and/or earthing impedance, depending on user requirements:
- 3-phase faults without earth (ground) connection
- 3-phases faults with earth (ground) connection
- 2-phase faults without earth (ground) connection
- 2-phases faults with earth (ground) connection
- 1-phase to earth (ground), with or without earthed neutral point.

SCC can be started on demand to calculate a single fault and can run in screening mode. In screening mode, SCC checks breaking capability, protection sensitivity, and earth fault current for a selectable area or the entire distribution network. The results of SCC are presented on network diagrams and in tabular displays.

Voltage/VAr Control (VVC)
VVC calculates the optimal settings of the voltage controller of LTCs, voltage regulators, and capacitor states, optimizing the operations according to the different objectives. The following objectives are supported by the application:
- Minimize distribution system power loss
- Minimize power demand (reduce load while respecting given voltage tolerance)
- Maximize generated reactive power in distribution network (provide reactive power support for transmission/distribution bus)
- Maximize revenue (the difference between energy sales and energy prime cost)
- Keep the system within constraints.

System operational constraints such as line loading and consumer voltage limits are automatically accounted for in terms of penalties. VVC supports three modes of operation:

The optional volt/watt optimization allows to control the active power of battery storage systems and flexible loads (as interface to demand respond management systems).

- Online mode
  The purpose of this mode is to provide an optimal solution that conforms to the desired objective function.
- "What if? "VVC studies online
  The purpose of this mode is to provide an optimal solution that reflects the current status of the distribution network with the actual topology but with different loading values.
- Study VVC
  The purpose of this mode is to allow the user to execute short-term operational studies, with different topology and different loading values.

The output of VVC application includes the switching procedure for implementing the solution, and the values of the objective functions before and after optimization. In online mode, VVC supports both open-loop (VVC proposes switching actions) and closed-loop (VVC actually initiates switching commands to implement the solution). Results such as flows, currents, voltages and losses are displayed on network diagrams and tabular displays.

Optimal Feeder Reconfiguration (OFR)
The objective of this application is to enhance the reliability of distribution system service, power quality, and distribution system efficiency by reconfiguring the primary distribution feeders. OFR performs a multi-level reconfiguration to meet one of the following objectives:
- Optimally unload an overload segment (removal of constraint violations)
- Load balancing among supply substation transformers
- Minimization of feeder losses
- Combination of the latter two objectives (load balancing and loss minimization), where each objective is included in the total sum with a user-specified or default weighting factor.

System operational constraints such as line loading and consumer voltage limits are automatically accounted for in terms of penalties. OFR supports two modes of operation: In online mode, the application uses the existing real-time measurements and the current topology. In the study mode, the operator can simulate short-term operational studies with different topology and measurements. The output of OFR application includes the switching procedure for reconfiguration, and the values of the objective functions before and after reconfiguration.

Distribution Contingency Analysis (DCA)
The objective of this application is to see the influence of faults (unplanned outages) as well as planned outages on the security of the distribution network.

DCA assesses
- n-1 security in all meshed parts of the distribution network
- Security of simplified restoration procedures based on the current reserve
- Security of reconfiguration scenarios (back-feed, coupling of substations, etc.)
- Security of predefined restoration procedures
- Security of scheduled switching procedures.

DCA simulates single, multiple and cascading/conditional faults as well as outages of distributed generation.

Expert system applications
The Spectrum Power™ expert system supports the operator in solving critical and complex tasks in the field of network operation and disturbance analysis. Spectrum Power™ expert system applications provide two functions, an intelligent alarm processor (IAP), and an expert system for Advanced Network Operation (ANOP).

The IAP provides information about the fault location in case of a network disturbance. It is based upon a hierarchical, multi-level problem-solving architecture that combines model-based and heuristic techniques, and works with an object-oriented data structure. Within the diagnosis, the IAP determines the location and the type of disturbances in electrical networks, e.g., fault within a transformer. The model used by the IAP corresponds to the model of the protection system. This provides the additional advantage of monitoring the correct operation of the protection system. The diagnosis results are displayed in the XPS report list.

Advanced Network Operation (ANOP)
This system supports the following network operations of the operator:

- Automatically triggered operations for:
  - Automatic fault isolation and restoration
  - Automatic removal of overload
- Manually triggered operations for:
  - Manual fault isolation and restoration (trigger fault)
  - Planned outage (take out of Service)
  - Load relax
  - Resupply (energizing).

The algorithm of ANOP manages all types of distribution networks – for cities or provinces, small networks, or large networks – with radial configurations and also with looped configurations. It can be used in telemetered networks as well as in non-telemetered networks. The algorithm is fully generic, considers the actual network status (topology, values, tagging), and provides an authentic and extensive solution for the given task, taking into account all electrical and operational requirements. The algorithm develops the best strategy for the given situation and considers all necessary steps to reach a solution that fulfils the task in a secure, complete and efficient way.

With the help of the built-in power flow, each step is checked; tagged equipment is respected. The proposed solution changes the actual topology of the network in a minimal way. In the exceptional case in which a complete solution is not available under the actual circumstances, a partial solution is evaluated, again taking into account all electrical and operational requirements. The results are displayed in the XPS report list and in the XPS balance list, and a switching procedure is created and inserted in the switching procedure management.

7.1.9 Advanced Distribution Management System (ADMS)

Energy distribution systems become increasingly complex due to the integration of distributed energy resources and storage, smart metering and demand response. In combination with increased grid automation, this leads to inundating utilities' systems with data that needs to be intelligently managed. At the same time, utilities are under growing regulatory and customer pressure to maximize grid utilization and provide reliability at all times.

Traditionally, utilities have approached distribution grid management from different perspectives: Some were applying Distribution SCADA systems with focus on real-time monitoring and control, while others were applying Outage Management (OM) systems with focus on managing large amounts of planned work and unplanned outage activities with less focus on activities in real-time. Application packages for grid analysis and optimization were somehow available, but more or less only loosely coupled. Such approaches are inadequate to sufficiently respond to today's challenges that require common addressing of formerly separated concepts such as grid loss minimization, congestion management, outage management, and automated service restoration.

An innovative concept is needed to combine SCADA, outage management, and fault and network analysis functions on a software platform under a common user interface, and thus overcome these deficiencies. Furthermore, the concept has to consider that in today's distribution utilities, everything concerning managing the grid must be integrated into the utility's IT.

Catering to the next era of distribution control systems, the ADMS integrates three core components Distribution SCADA, OM, and Advanced Fault and Network Analysis operated under a Common User Environment (fig. 7.1-35).

Fig. 7.1-35: Spectrum Power™ ADMS – the 3-in-1 solution

It enables the user to:
- Monitor, control and optimize the secure operation of the distribution network
- Efficiently manage day-to-day maintenance efforts, while guiding operators during critical periods such as storms and outage related restoration activities.

ADMS integrates the intelligent use of smart meter information and distributed resources regulating capabilities at the same time, thus providing a solid foundation for the management of the emerging Smart Grid.

Increasing the operator's situation awareness
and reducing the operator's reaction time with its geospatial/schematic user interface and integrated substation/feeder auto-displays:
- Distribution SCADA (D-SCADA) to enable the integration of Substation/Feeder Automation; and
- Distribution State Estimation (DNA/DSSE) to determine the real-time state of the network.

Reducing fault location and service interruption time
- Outage Management (OM, incl. Trouble Call Management and Mobile Crew Management) and Switching Procedure Management (SPM) integrated with Smart Metering (MDM/AMI)
- Automated Fault Location, Isolation and Service

Restoration (FLOC and FISR). Reducing network loading at peak times and increasing asset utilization
- Optimal Voltage/VAr Control (DNA/VVC) to enable voltage reduction, integrating the possible use of Distributed Generation
- Optimal Feeder Reconfiguration (DNA/OFR) to enable removal/reduction of (active/foreseen) overload, integrating the possible use of Distributed Generation and Demand Response.

Increasing network efficiency and reliability of supply
- Optimal Voltage/VAr Control (DNA/VVC) to enable features such as loss reduction and improved voltage profiles, integrating the possible use of Distributed Generation.
- Optimal Feeder Reconfiguration (DNA/OFR) to enable load balancing, etc.
- Distribution Load Forecast (DLF) to enable operational planning with the above functions
- Increasing operational efficiency
- Workspace Management, Test Mode and integrated tools under a common user environment to automate the user's workflow
- Performance and sizing capabilities to enable LV modeling integration (EU and big US city centers)
- Integration with Condition Monitoring for asset usage reporting and asset secure state retrieval.

Increasing business process integration
- SOA framework to enable CIM-based SOA integration with other systems (e.g., CIS, MDM)
- GIS smart integration to enable GIS as distribution network definition source master.

The emerging Smart Grid produces a very large amount of data to be processed (e.g., data from smart meters). Advanced DMS provides the transformation of this impressive volume of data into the minimum amount of actionable information for the efficient operation of the grid.

Spectrum Power™ ADMS is characterized by its unique common user environment enabling operation of all ADMS functions from a common web-based user interface while using a common operational network data model (fig. 7.1-36). The operational model is kept aware of or synchronized with model changes implemented in the GIS when readied for real-time operation. And the user interface integrates, under a common geospatial visualization tool (i.e., schematic views, geospatial maps, and tabular lists), the distribution SCADA operation, the complete work and outage management process, and the use of the complet suite of advanced applications. Other external applications can also be considered for such integration via dedicated additional data providers.

Fig. 7.1-36: Spectrum Power™ ADMS – Distribution SCADA, Advanced Fault, Network Analysis and Outage Management operated on one technology platform with one common user interface

With its component-based architecture and common user environment, Spectrum Power™ Advanced DMS (fig. 7.1-37) provides a flexible, configurable environment for advanced grid management compatible with the different market requirements. ADMS is typically provided as a full-scope solution, but it is also available as follows:

- Integrated with a third-party outage management system
- Integrated with a third-party SCADA.

Enterprise integration with external systems, such as GIS, CIS, IVR, Advanced Metering, Workforce Management and Asset Management systems, is commonly included in these implementations via the CIM-based SOA integration framework that is an integral part of Advanced DMS.

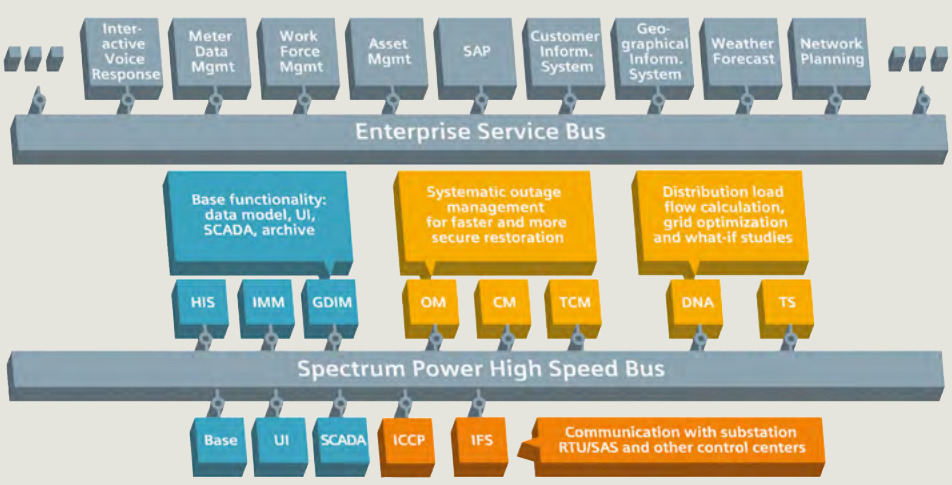

CM	Crew Management
DNA	Distribution Network Applications
GDIM	Geographical Data Import Management
HIS	Historical Information System
ICCP	Inter-Control Center Communications Protocol
IFS	Independent Front-End System
IMM	Information Model Manager
OM	Outage Management
RTU	Remote Terminal Unit
SAS	Substation Automation System
TS	Trainings Simulator
TCM	Trouble Call Management
UI	User Interface

Fig. 7.1-37: Spectrum Power™ ADMS – Architecture

7.1.10 Active network management

Stable grid operation through targeted monitoring and fast control

The challenge: unpredictability of energy infeed into the distribution grid
The entire energy system is in motion. Decentralized power generation from renewable sources is being expanded more intensely, and integrated into the distribution grids. Energy is no longer fed into the distribution grid exclusively via the transmission grid but also directly from different – often volatile – generators.

Grid management is facing challenges like an unclear, fluctuating direction of load flow and, more and more often, critical voltage violations. There is a growing risk of voltage range infringement, and thus malfunctions or even damaged equipment on the consumer side. At the same time, the danger of overloads on lines, transformers and other equipment is growing, which can even result in grid failure.

The solution: voltage and capacity management including visualization
Processes in the distribution grids must be made visible at all times in order to reliably assess the status and take efficient countermeasures before critical situations arise. The Spectrum Power™ Active Network Management (ANM), Siemens' flexible software solution, is a smart tool for distribution grids. It supports a wide range of equipment – from transformer tap changers and capacitor banks to controllable loads and generators including battery storage (fig. 7.1-38).

The Spectrum Power™ ANM displays the current load flow directions and calculated load values, as well as voltage range violations and overload situations. This also includes integrated analysis and archiving functions, allowing automatic result validation and comparison as well as reports, and facilitating meaningful short-term and long-term views.

The Spectrum Power™ ANM also provides functions for convenient voltage range and capacity utilization management. This makes it easier to predict voltage violations and equipment overloads – and substantially reduce them in connection with control algorithms. And what about losses on the distribution grid? These can be minimized with distinct voltage, reactive power and active power control. The Siemens software provides a reliable basis for making these decisions, whether automatically or in manual mode.

The benefits: higher efficiency and secure and stable supply thanks to the Spectrum Power™ ANM
The Spectrum Power™ ANM from Siemens is an effective lever for operating distribution grids more efficiently and with greater control – especially if there is a growing proportion of renewables in the energy mix.

Benefits at a glance
- Load flow values and load flow directions are reliably monitored. Voltage violations and equipment overloads are detected quickly and accurately.
- Balancing measures, primarily for maintaining grid stability and for protecting equipment, can be initiated at an early point.
- Distribution losses can be effectively reduced.
- An optional automatic mode allows transformer tap changers, capacitor banks, loads and generators, including battery storage, to be controlled without operator intervention.

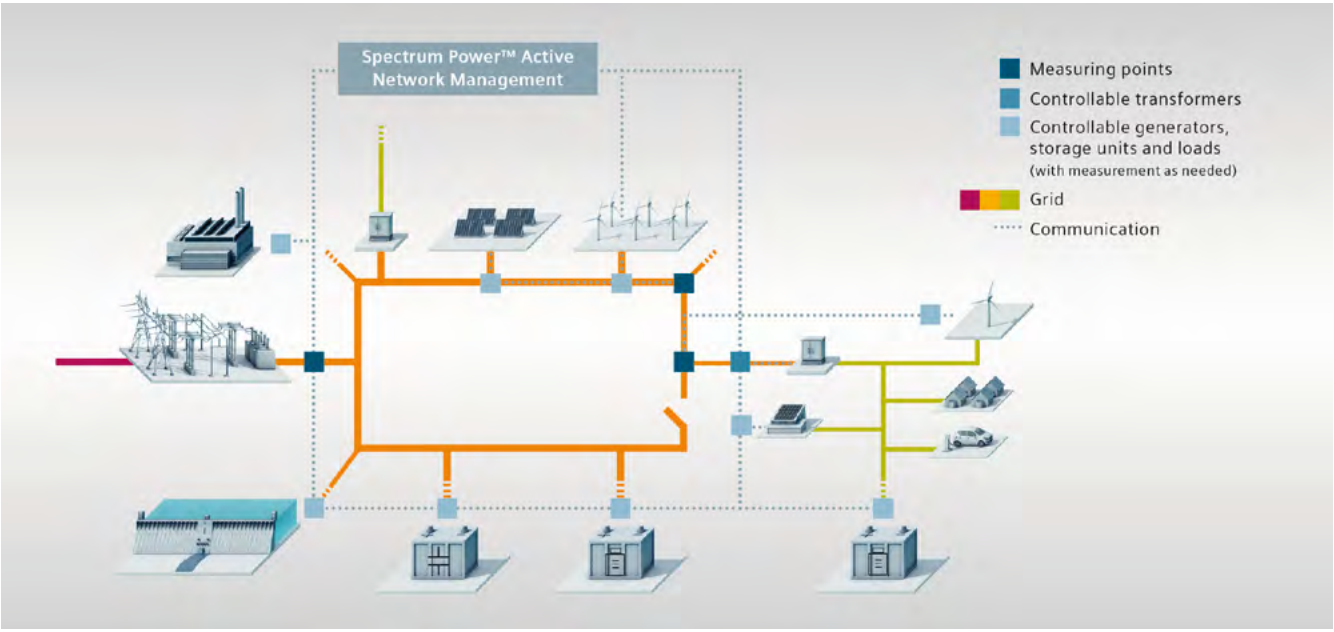

Fig. 7.1-38: Spectrum Power™ Active Network Management – stable grid operation through targeted monitoring and fast control

7.1.11 Smart Grid Energy Manager (SGEM)

In parallel with the liberalization of the energy markets, there is an ever increasing need for data sharing, not just to serve the own enterprise, but also to respond to needs from outside entities. Sometimes, this need is driven by industry entities. Sometimes, and lately more than others, this need is driven by industry requirements passed by governing bodies such as NERC and FERC.

Siemens has been alert to the need for common modeling language and integration platforms for optimizing the benefit also to Smart Grid implementation across the power delivery network. In developing the first product of its kind, the Smart Grid Energy Manager (Spectrum Power™ SGEM), Siemens has compiled within a single data model both planning and operations network models for both transmission and distribution, and presents model editing and tracking on a time-synchronized basis – allowing a model of the system to be derived for any point in time in the future or history, in either a planning or an operations protocol.

Siemens is now changing the mindset of modelers from thinking in terms of traditional network models where individual assets properties are aggregated into a larger component in the model (i.e., wave traps, underground cable segments, overhead line segments are all aggregated into one "transmission line" in the network model – resulting in the individual assets loosing their identity) to terms of the network really being a series of interconnected assets. This transitional thinking results in significant reliability, efficiency and resource optimization.

The Siemens Spectrum Power™ SGEM provides tools and automation to efficiently manage the exchange, validation, approval and commissioning of transmission network model changes within and between RTO/ISO and Transmission Distribution Service Provider (TDSP) operations and planning departments. SGEM enables generating, managing and synchronizing network model information from a single shared source to support utility systems and applications, such as network planning, energy management, market operations, congestion revenue rights, outage scheduling, and more. SGEM also provides a foundation for Smart Grid information management. The CIM-based architecture provides a unified model, auditable model change records, approval levels for model changes, as well as rich model documentation capabilities. It allows chronological model tracking in a fully open environment, allowing all applications to share services and data. This greatly reduces modeling errors, improves coordination, and streamlines processes for transmission network changes. This enables exchanging information on a level far above the paper or file exchanges that are in use to day.

The SGEM integrates Spectrum Power™ Information Model Manager (IMM) and Siemens Model on Demand (MOD) products into a single package. The IMM generates and

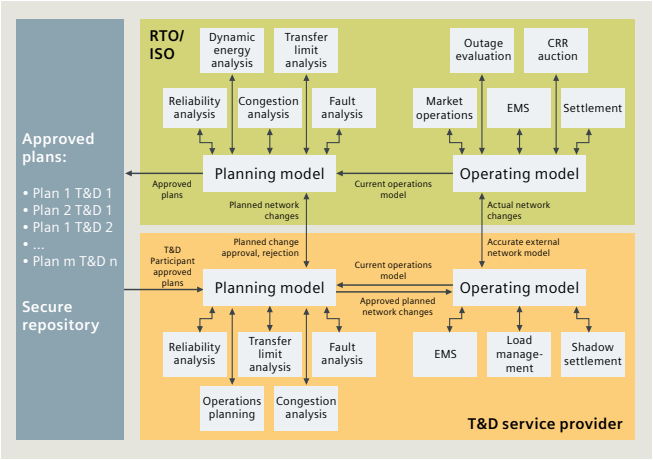

Fig. 7.1-39: Common model methodology

maintains the operations network model changes, while MOD tracks the planning model and all planning changes. The integrated package provides consistent, coordinated models for any point in time, based on the planned energization dates provided to the system (fig. 7.1-39). Point-of-time models can be exported to most popular applications using CIM (IEC 61970 and IEC 61968).

The key features and capabilities are:

- Industry standard CIM-based model representation.
- Synchronized chronological model tracking from future to past horizons.
- Single model integration of planning, engineering, operations, market, etc.
- Electronically submit network model changes to facilitate exchange between the RTO/ISO and the regional TDSP.
- Develop a planning model for the RTO/ISO combining the current regional operating model with the region's proposed plans. This model can be used as the basis for evaluating network reliability as network changes are implemented over time.
- Electronic Approval/Rejection Notification provides electronic notification to the TDSP when a plan is approved or rejected. If the plan is rejected, it identifies the reasons so the TSDP can modify and resubmit the plan in a timely manner.
- Approved plans are placed in a secure accessible repository. The TDSP can access its approved plans from the repository and use these to develop the commissioning plan necessary to put them into operations.

Managed changes between planning and operations within the TDSP provides streamlined electronic coordination of planning model changes to be commissioned with the real-time operating model.

7.2 Grid application platform and applications

The Electricity Distributor business is undergoing a radical transformation with technology modernization and competition, which has never been experienced before, and this has an impact across all internal business units as well as externally to its customers. Where the utility of the past would implement one new technology every three to five years, the utility of today is adding five or more new information systems as well as sensing and control technologies in one to two years. EnergyIP is a platform purposefully built to support rapid expansion for a quick integration into the utility enterprise infrastructure and adaptation to future business demands.The modernization of electricity distribution is evolving into a new Smart Grid, capable of enhanced monitoring, feedback and control, and new customer services. Thousands of new sources of information are available from smart meter communication networks, distributed renewable energy resources, and the convergence of Information Technology (IT) with Operational Technology (OT). This creates massive amounts of data points that need to be consolidated, standardized, and managed in a way that enables not only a singular business process, but the entire enterprise with information.

With over 55 million smart meters worldwide, the EnergyIP platform is proven to be the industry's most comprehensive portfolio of Smart Grid technology that can extend the benefits of an AMI business transformation across the organization. Each of these customers is successfully deploying and billing from smart meters while enabling select benefits as that individual utility's business needs dictate and regulators direct. The EnergyIP platform is an enabler of smart meter deployments that grows with the business and does not limit innovation and improvement.

The platform's modular design accommodates the initial needs of enabling a Smart Meter deployment while providing the capability of adding applications and functionality, as business needs grow, with minimal disruption to existing operations (fig. 7.2-1). Innovative applications that leverage the platform provide functionality such as Analytics, Customer Engagement Portals, and Demand Response, to name a few, that extend and maximize the utility's business operations capability and efficiency. The EnergyIP platform is the solution for enabling business transformation, and a gateway to the future of building and managing a comprehensive Smart Grid infrastructure.

The EnergyIP platform provides, at its core, a data model oriented towards grid operations, as well as powerful aggregation methods. As a powerful validation engine, it thereby delivers puntual, complete and high-quality data for events and consumptions through standard-based interfaces. The EnergyIP platform extracts the operational value from smart meter data to support more informed decision-making by utilities, thus improving operational efficiency without extremely expensive integration programs. Incorporating automated business processes and workflows, EnergyIP goes beyond billing-centric Meter Data Management (MDM) that limits the potential of smart meters to integrate distribution operations and drive Smart Grid Management.

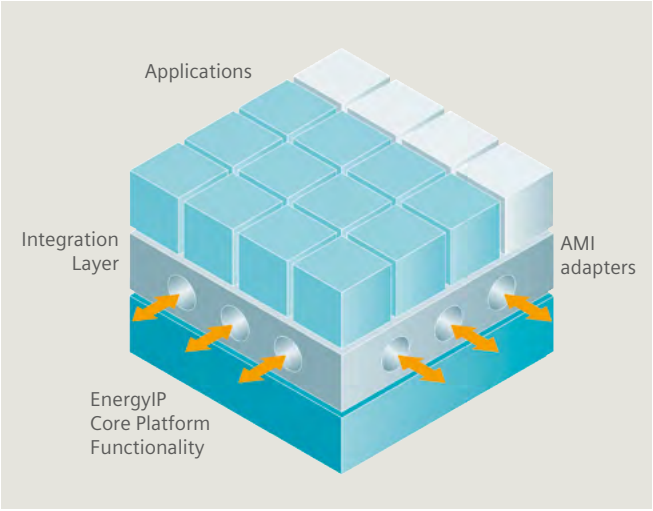

Fig. 7.2-1: Overview of EnergyIP solution

EnergyIP changes smart meter data into operational information, and provides it across the enterprise in order to drive efficiency and enable benefits within Operations, Finance, IT, Revenue Protection, and Customer Service. For example, Operations can improve field efficiency with enhanced outage management and restoration tracking capability, or decrease unnecessary truck rolls by means of automated on-demand reads and remote connect/disconnect processes. Revenue Protection will accelerate and improve receivables by quickly identifying and resolving energy diversion issues. EnergyIP can help Finance to strategically manage their capital budget spending while improving reliability and quality of service through improved transformer load management analytics.

It is not enough to simply have a mature MDM with a strong set of core functionality. Business demands are constantly shifting, and the MDM must be flexible enough to adapt to and support these unique changes utility by utility. The EnergyIP Smart Grid platform has been architected to do just this. This platform is based on Service-Oriented Architecture (SOA) principles and contains a set of IEC 61968-9 and MultiSpeak standard APIs that enable system operators to quickly integrate it into the utility enterprise infrastructure, and to adapt it to future business demands. A common information model is at the core of the foundation, which standardizes the definition of data elements between Information Technology and Operational Technology in order to simplify integration and leverage.

7.2.1 Typical use case

Today's Smart Metering technology is a real-time communications network which collects and delivers energy consumption, power quality, and alerts throughout the day. Typically, the bulk of the smart meter data collection will occur between midnight and 6 a.m. with an overall goal of having yesterday's data fully processed and available by 8 a.m. Consequently, the day in the life of smart metering starts in the morning when the Smart Meter Operations personnel first log into EnergyIP.

Similar to the Distribution Control Center, which is responsible for electricity being provided to every point on the grid within the required reliability tolerances, the Smart Meter Operations team is responsible for ensuring that complete and accurate data is available to each user and system in the electric utility (and to the utility customer) within the required timeframe, and transformed into the format necessary for use by the business systems. Smart Meter Operations relies on EnergyIP for this control and management of data to meet its responsibilities. EnergyIP manages all of the data and business processes associated with installing and servicing smart meters, reading and billing, alarm notification, as well as the advanced applications for outage management, distribution operation, voltage optimization, revenue protection, and customer service.

The Smart Meter Operator is presented with the EnergyIP dashboard to quickly understand how his/her day will be:

- Is data being collected and delivered from the smart meter system as expected?
- Are there a large number of alarms from the smart meters?
- Has CIS requested billing determinants for the day?
- How many data and equipment failures are queued for analysis and resolution?
- Were all actionable service requests and user expectations met yesterday?

EnergyIP has the complete view of intelligent metering and sensors, in order to provide this immediate snapshot of the health of advanced metering and quickly isolate the problems or issues requiring focus and attention. The Smart Meter Operator uses the EnergyIP Operator Console to react to any issues by quickly adding more resources or adjusting the Meter Data Management (MDM) to meet any challenge and shield the downstream business users from any problems and exceptions.

With the high level operational picture understood and in control, the Smart Meter Operator can support the many business functions of advanced metering while leveraging the automated business process management of EnergyIP. Smart meters will be installed at customer premises by the technicians in the field, and EnergyIP will identify the newly installed advanced meter (as well as any removed meters), and seamlessly coordinate the discovery of the new device by the smart meter data collection system, validate the configuration and reliability of the meter, and notify all of the impacted business systems of the availability of the new smart meter to support billing and customer operations. The job of the MDM to validate meter data starts at the moment when the meter is installed, in order to ensure that each meter meets the needs of all business users, and in order to allow the smart meter operator to address the small percentage of new devices which are configured or installed incorrectly.

EnergyIP receives and validates all data provided from the smart meter in real-time to ensure that the business and operational systems are provided with accurate and reliable information as quickly as possible without delays caused by batch processing. The real-time validation and, where appropriate, estimation of the meter data allows the users and systems to expect complete information without gaps or erroneous data, and to focus on the utility business. By going beyond "just energy data" and applying the same rigorous validations to power quality and alarms, the MDM ensures that all data provided from smart meters meets the business expectations.

Serving as a service order management system with intelligent work flow management, EnergyIP will identify service conditions, and automatically direct work orders to field technicians for investigation of tamper or power quality conditions, or for replacement of failed or improperly functioning endpoint devices. With this intelligent automation, the Smart Meter Operator is freed from reviewing reports and screens, and can concentrate on data quality and exception issues identified by EnergyIP.

With full control of the meter data and the smart meter asset, EnergyIP enables the full value of the smart meter as it fulfills the requests of the utility business systems to provide accurate and timely billing, disconnect those customers moving out or behind in payment, and manage system outages. EnergyIP provides all these business benefits while supporting the myriad of analyses and uses of the smart meter solution to improve operational efficiencies and expand customer services.

1
2
3
4
5
6
7
8
9
10
11
12
?

During the day, the utility billing system will request billing data from EnergyIP to allow the calculation and presentation of regular bills, as well as to open and close customer accounts. EnergyIP, in coordination with the billing system, calculates the energy and power consumption based on the time of day, or on specific conditions in which the energy was consumed, and on individual rate agreements which the utility has set with the customer. It provides this complete and accurate data to create the bill without manual intervention or error. Prepayment services are enabled by EnergyIP's up-to-date energy consumption and remote disconnect capabilities, allowing the utility to provide any terms and services which meet the needs of its customers.

Using the power quality and power status information provided by the smart meters, EnergyIP will identify critical distribution conditions, and pass this information to the utility distribution operations systems for real-time control and management of the electricity distribution grid. Outage alarms, voltage alarms, and bellwether sensor measurements are received, validated and transmitted to these systems as required for operating and controlling the network while ensuring that false or duplicate data does not interfere with their operation.

Throughout the day, while managing the smart meter deployment, reading and validating smart meters, and providing billing and power information, EnergyIP also produces operational reports, requests for current meter data, fulfills requests for information from connected systems, and performs analysis on the data to answer user questions or identify trends. As a real-time operational platform, EnergyIP resides in the background, as it manages all of the data, asset and business processes of the smart meter while seamlessly integrating the information into the utility business systems in order to provide accurate and complete information at the frequency and format required. As a utility begins to improve and expand its services and operations, EnergyIP enables the reconfiguration and update of the smart meter solution to provide additional benefits and flexibilities to the utility business.

7.2.2 EnergyIP platform overview

EnergyIP is the utility industry's leading integration platform and business process management system for Meter Data Management. The system delivers event-driven information and automation in real-time in order to integrate utility operations and enable a host of business applications delivering Meter-to-Cash, Consumer Engagement, and Operations Automation capabilities to the enterprise (fig. 7.2-2).

At its core, EnergyIP has three major functions:

- It acts as a highly flexible platform for linking multiple Smart Meter and Smart Grid technologies with utility business information systems.
- It provides highly scalable meter data processing and management as well as a common system of record to support Smart Grid Management functions.
- It enables business process integration and automation for Smart Grid Management through the EnergyIP Application Suite.

The most important features are described below:

System Architecture
EnergyIP helps to manage all aspects of smart meter deployment and operation, as well as all meter types and sensors. It captures the complex relationships among assets, premises, customer accounts, users, applications, and services that must be managed in any successful smart meter network. Incorporating automated business processes and workflows, EnergyIP goes beyond CIS-centric MDM to integrate operations and drive Smart Grid Management.

Event-driven operations: Processing data in real-time – not batch – leads to increased customer satisfaction and cost savings via timely information and just-in-time operations.

Industry-leading scalability: EnergyIP is the only product designed from the ground up to handle the complexity of multi-million point smart meter deployments.

In-memory data grid: An in-memory data grid provides faster meter read processing, as well as improved scalability and performance. The in-memory data grid stores frequently accessed data for faster processing by applications, in a fail-proof manner without any need for active management.

Flexibility of the Agile Application Framework (A2F): The EnergyIP application framework A2F provides flexibility of deployment protocol (JMS, REST or web service) for both EnergyIP and third-party applications. The new framework supports dynamic discovery of application services, which facilitates the starting of new application instances at runtime for scalability and load balancing. The A2F framework also provides additional benefits including code generation, performance stats collection, as well as security and context-based routing, thereby increasing the speed of enabling new applications on the EnergyIP platform.

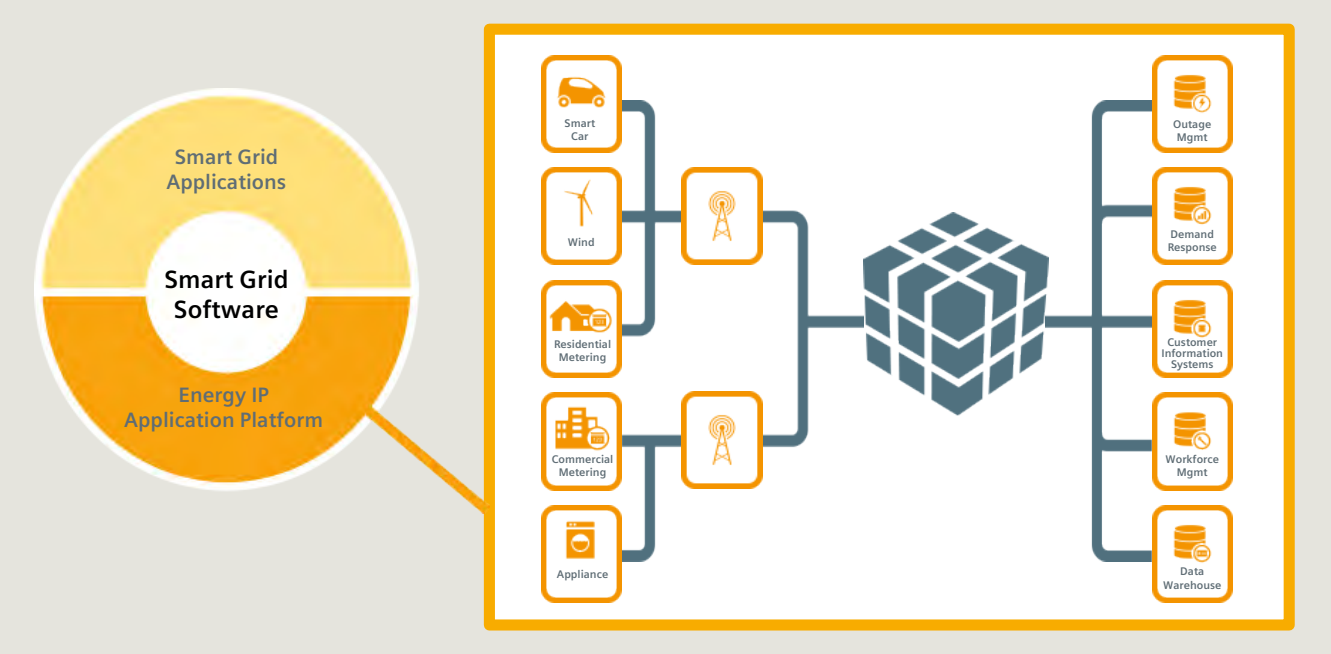

Fig. 7.2-2: Overview of EnergyIP Application Platform

User Interface: EnergyIP delivers a more intuitive user interface that guides users through tasks while strategically presenting all the relevant information in order to increase usability. In addition, EnergyIP provides a new system management console for maintaining system health, managing configurations, maintaining key performance indicators (KPIs), and controlling applications.

Dashboard: The EnergyIP user interface includes a dashboard that allows system operators to customize and display their most relevant data and information, including meter reads processing statistics, summary of work, and open service requests by queue.

Billing Request Management: In EnergyIP, all billing request related information is consolidated in a single summary screen. The billing request screen includes billing request details, validation failures, export logs, action requests, and other related information necessary to troubleshoot and resolve billing request exceptions.

Administration System Console: The system console has been enhanced for managing the configuration, controlling application instances, monitoring system status and performance, and customizing applications. The system console introduces the concept of configuration views that allows a user to create a view of only applications (like relevant AMI adapters, billing export adapters, etc.) that are actively being used in a given EnergyIP deployment, thus enhancing overall usability of the application.

This robust architecture allows non-disruptive functional evolution, ensures performance as the system scales, and provides superior reliability with server fail-over and hot-standby capabilities. Online backups and archiving are standard, and hot-updates make EnergyIP a true 7 x 24 x 365 solution.

7.2.3 EnergyIP applications – Introduction

The comprehensive and extensible data models of the EnergyIP Grid Application Platform as well as its core processing features are the foundations to develop Smart Grid applications which provide additional business benefits. This unified platform (fig. 7.2-3) enables multiple applications and services to leverage the same reference data without additional redundant system integration. EnergyIP applications are provided by Siemens, partners and customers utilizing the well-documented development framework. The benefits of this capability grow as future Smart Grid applications are introduced to further leverage the platform. In the following, the major EnergyIP applications are briefly described.

Fig. 7.2-3: Overview EnergyIP applications

7.2.4 Meter Data Management

Smart Grid definitely is the future, not only limited to the electrical world, but also for the water and gas world. For utilities upgrading to Smart Grid, MDM is a prerequisite to sustain, support and yield good returns on the investment.

MDM is a key component of Smard Grid infrastructure, which is instrumental in collecting and managing data from devices like smart meters.

MDM systems continue to provide consistent and reliable data to the utilities to bill their customers efficiently and timely, thereby also enhancing end user/consumer experience. MDM systems have been helping the utilities in realizing the full benefits of the advanced metering systems and AMI in Smart Grid parlance.

Therefore, the primary function of EnergyIP is to collect meter data (both reads and events) from the external head-end systems, and to store this information for access by the utility for billing and analytical purposes. The diagram (fig. 7.2-4) shows a component view of EnergyIP with all major application components, databases, and general message processing information. Optional components and features are also illustrated. The components and features included are dependent on the deployment of EnergyIP; therefore, not all components will pertain to every setup.

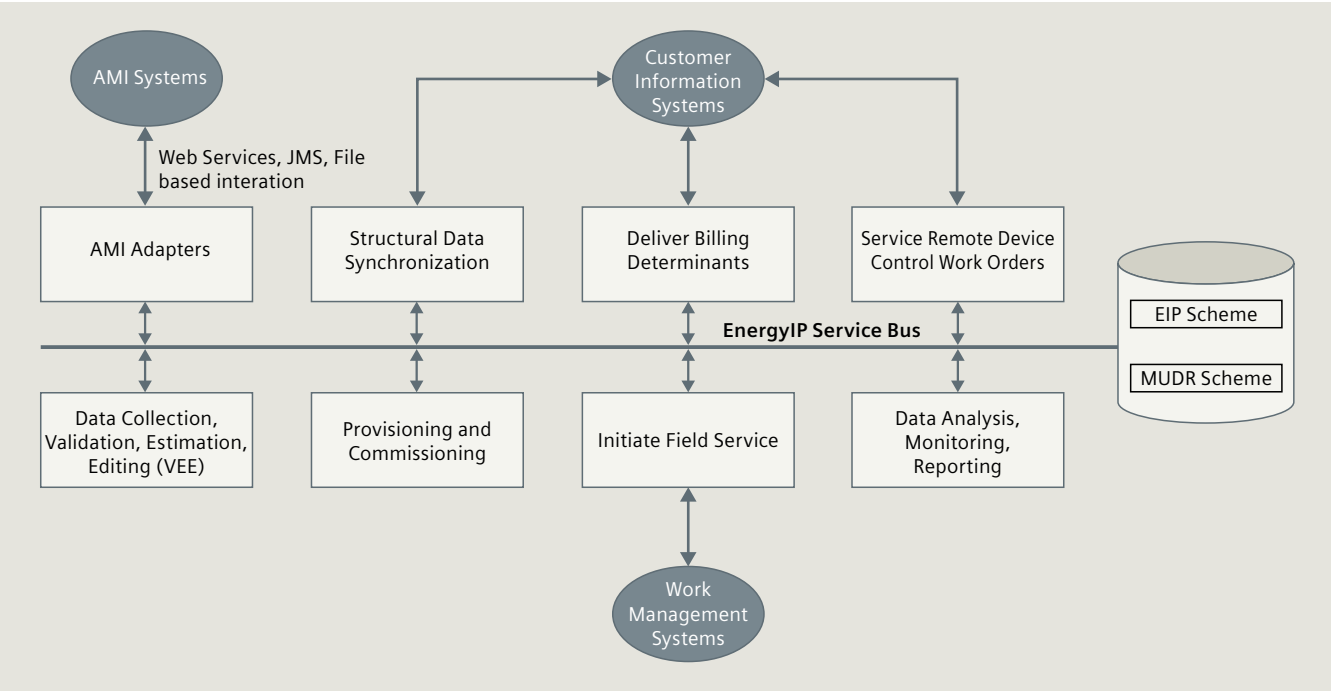

Fig. 7.2-4: EnergyIP component overview

7.2.5 Billing Service

The Data Delivery Service (DDS) in EnergyIP is comprised of DDS import adapters, DDS export adapters, and the DDS engine. The DDS is used to send out the billing determinants. DDS gathers all billing data sent to EnergyIP from the data collection sources, computes the billing determinants (such as total TOU consumption for the month), and provides the data to the utility to be used for billing clients.

Data Delivery Service includes processing of off-cycle and on-cycle billing requests, and also includes reprocessing of billing requests if there are updates to any of the underlying reads.

It exposes various services to create and process billing requests, define billing determinants, and so on. There are also services to create and schedule billing requests.

There are multiple ways to create a billing request. Billing requests can be created via any one the following DDS import adapters:

- DDS file import adapter
- DDS JMS import adapter
- DDS webservice import adapter.

The respective applications should be running to support the import.

Additionally, a billing request can be created from the EnergyIP UI; in that case, none of the request generating applications is required to be started. Apart from the DDS Import Adapters as shown in fig. 7.2-5, the DDS has a run once application, DDS Cycle Request Creator. It requires a schedule to be setup so that it runs daily to create on-cycle billing requests. It can be configured to filter out or include SDPs based on cycle Id and AMR ready flag.

DDS Engine is the core application that performs the entire billing processing. All other DDS applications act as request generating applications or timed dispatcher applications that send the requests to the DDS Engine. The DDS engine also interacts with several applications if Demand Reset is enabled.

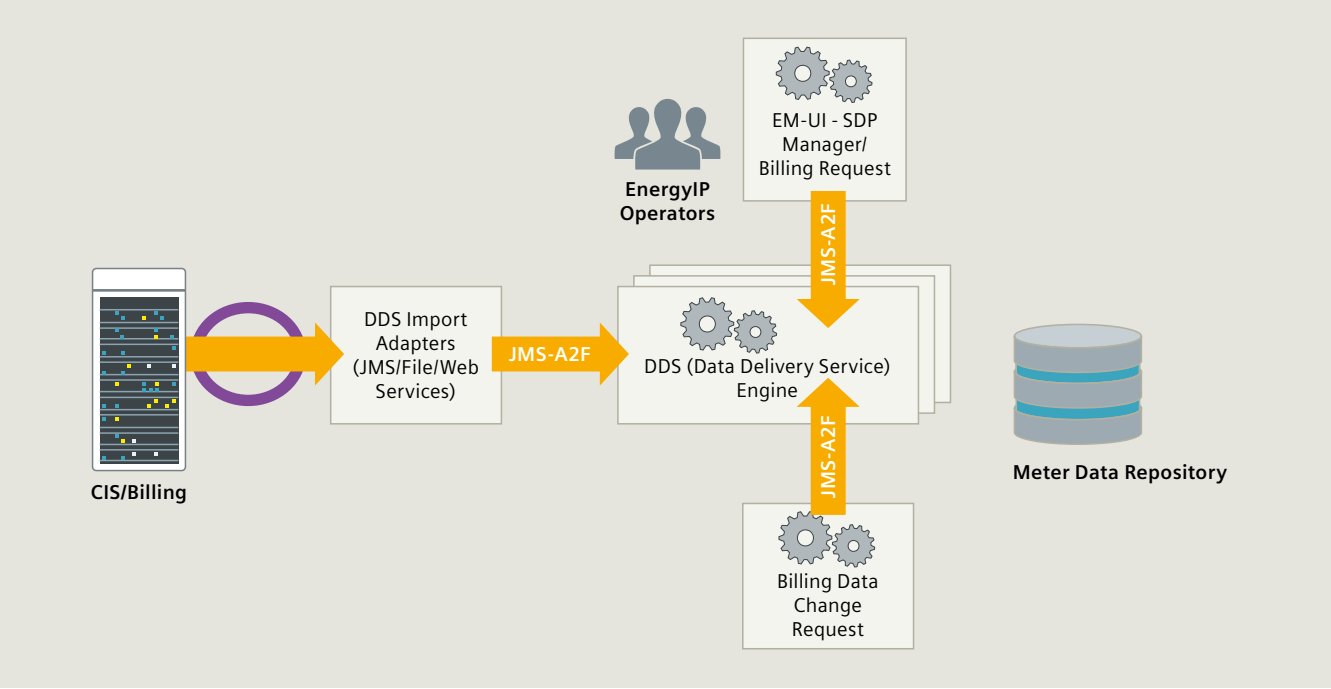

Fig. 7.2-5: Billing Service overview

7.2.6 Remote Device Control

AMI devices are capable of two-way communications with end devices. Such capability enables several high-value business application scenarios in a cost-efficient manner by eliminating the need for expensive manual field service (truck roll). Examples of such business scenarios include:

- Executing an on-demand read regarding move-in or move-out.
- Disconnecting the service for a customer whose billing account is past due, or on move-out
- Reconnecting service after move-in
- Performing remote power status verification to confirm power restoration.

Implementing these scenarios requires implementation of integrated business process flows across the CIS, WMS applications, and EnergyIP (fig. 7.2-6). Through its rich ecosystem of AMI adapters, EnergyIP represents the AMI capabilities to the enterprise applications, and insulates them from point-to-point integration with individual AMI technologies. The EnergyIP Activity Gateway component is responsible for receiving work requests from CIS for remote device control (such as Remote Disconnect on no pay). These incoming work orders are serviced by flexible work-flow processes that leverage AMI services to fulfill requests.

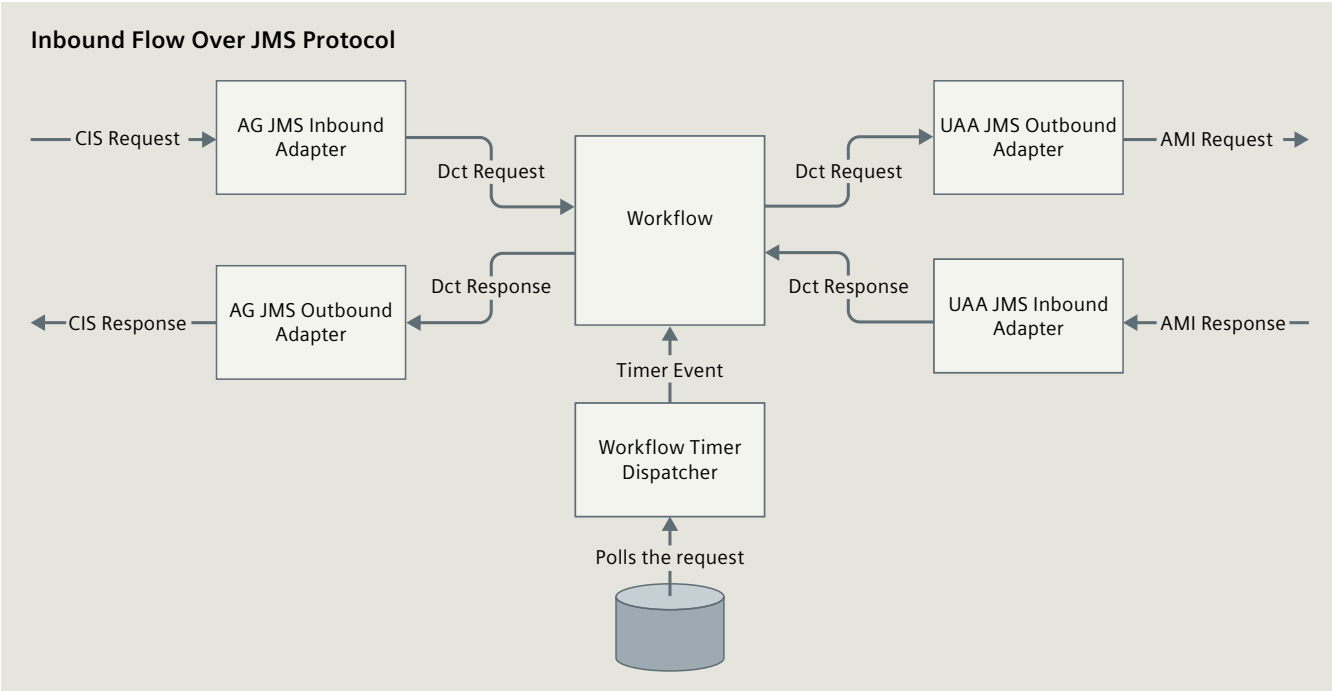

Fig. 7.2-6: Overview of Remote Device Control

7.2.7 Market Transaction Management – the blueprint for Data Hubs

The requirements on solutions that serve a whole market are demanding in terms of capacity and flexibility. Capacity is typically driven by the market-grade number of users, transactions, processes, and data volumes a data hub must handle on a daily bases. Processing time constrains driven by regulatory requirements or market demands create even more load. To ensure service quality and customer acceptance, a central hub solution must therefore be scalable and expandable to adapt to a changing market.

Flexibility is understood as the characteristic of a solution to easily adapt to process changes. Regulators revise changes processes and settlement rules in an energy market in order to adopt new legislation or optimize processes. A flexible solution eases the implementation of changes or new processes. It must support the most common market rules and processes, but must also be adaptable to market specific requirements.

Siemens' market leading EnergyIP Smart Grid integration platform is the foundation of MTM and many other Smart Grid applications. It is the platform upon which a broad set of applications can support large-scale, mass-market deployments. Hadoop's big data extension was natively added for storage of time-series data to the EnergyIP platform in order to address scalability concerns for very large markets.

The MTM application utilizes EnergyIP's unique combination of robust core functionality, coupled with its proven scalability as well as the flexibility to grow and adapt to changing business requirements (fig. 7.2-7). This ensures high-quality core processing features, continuous development of new features, and adaption of new technologies while reducing risks for system integrators and customers as MTM utilizes many of the foundational elements of the EnergyIP platform.

The highlights below characterize the platform benefits of the EnergyIP Market Transactions Manager.

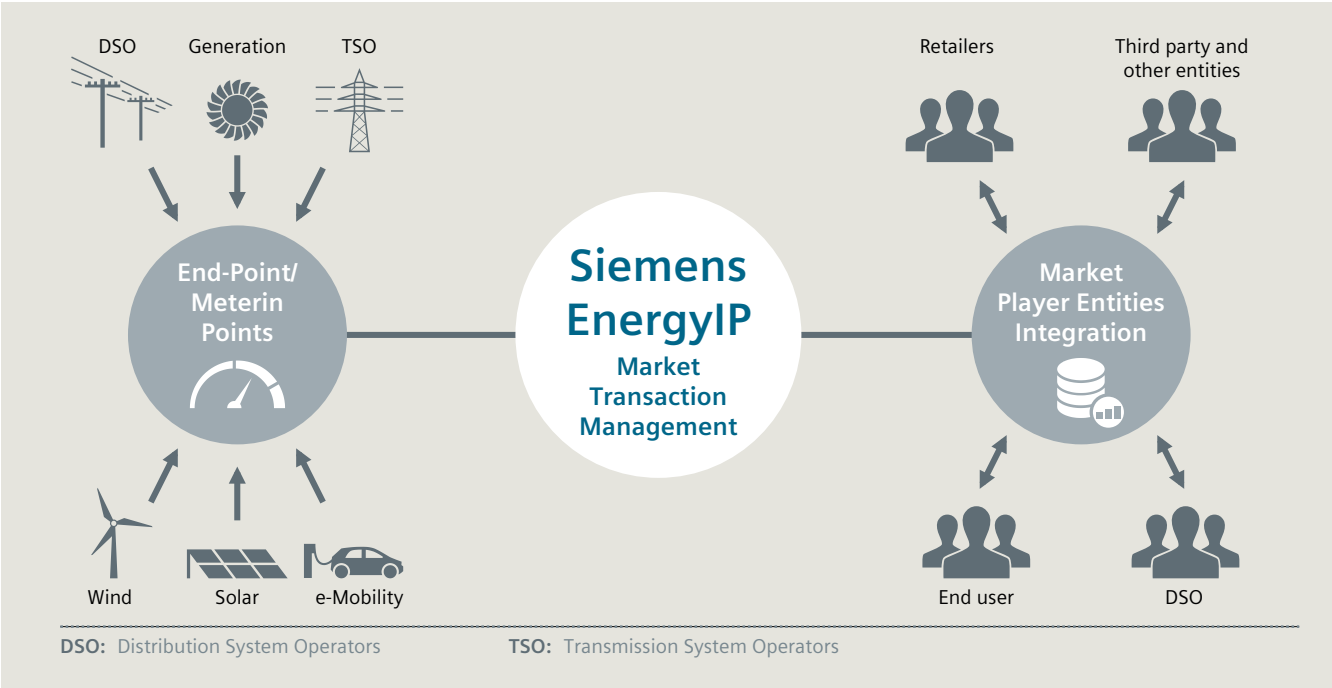

Fig. 7.2-7: Overview of Market Transaction Management

1
2
3
4
5
6
7
8
9
10
11
12
?

Industry leading processing capacity
Energy IP is uniquely architected to handle the complexity of multi-million metering point deployments, allowing for rapid adoption at any scale. So whether 50K or 50M meters have to be managed in the network, Energy IP is a proven solution that will scale to meet the system operator's needs.

Flexibility by modular design – enterprise agility
Energy IP delivers a flexible, modular architecture to support any Advanced Metering Infrastructure (AMI), and easily integrates with a wide range of market adapters and enterprise systems to accommodate regulatory and business process changes in a cost-efficient, non-disruptive way.

Integration
A common information model at the core of EnergyIP standardizes the definition of data elements to simplify integration, and leverage the data throughout the market entities. New, modular functionality can be incorporated without a complete upgrade or new integration of the solution. EnergyIP's application framework enables new service deployments without impacting current operations.

Automated, event-driven operations
Real-time processing data and operations data allows for the fastest possible decision-making and improved efficiencies in billing cash flow, IT reconciliation, customer responsiveness, and logistics.

Market integration
The EnergyIP Market Transaction Manager (MTM has purposely been developed to provide the storage and processing building blocks for a central data hub. Information exchange, business processes, and presentation of data are different from market to market. The data and settlement services as well as the open architecture enable partners to build a Data Hub solution as requested by the individual market. Regulators might want to look at the possibilities MTM provides to get input to design a harmonized market model enabling market neutrality through equal treatment of participants.

7.2.8 Advanced Device Management

Siemens's EnergyIP Advanced Device Management (ADM) application is a core component of the Smart Grid network offering (fig. 7.2-8). This application is designed to improve the performance of the smart metering network as well as to reduce operational and capital expenses related to the lifecycle. As a result, utilities can improve their total cost of ownership metrics realized via smart metering systems such as Advanced Metering Infrastructure. At the same time, they can complement quality of service metrics by alleviating certain tasks poorly performed by smart meter management solutions. With EnergyIP's ADM, application utilities can:

- Simplify the Smart Grid data collection architecture to quickly achieve stable and optimal meter reading performance with faster problem resolution. ADM extends this functionality to other connected devices as well.
- Strategically select meters and sensors to meet their cost and performance goals for management of capex expenditures.
- Add automation and control tools to support multi-million end device networks with fewer support personnel. Utilities can easily complement their existing tools with the ADM application.
- Add configuration management to their existing processes to support massive numbers of field devices. Utilities may have existing processes and tools to manage configuration. EnergyIP ADM will work with those processes and tools to implement the best possible solution for the utility.
- Manage firmware rollouts for continuous performance improvement and extending the life span of all communicating devices.
- Manage a complex environment of smart meters and other devices independently of the vendor and communication infrastructure. Hence, utilities can efficiently provision devices corresponding to the right network to get best-in-class operational performance overall.

Siemens EnergyIP with the ADM application can support direct connections to end devices in order to minimize data transformations and integration to traditional head-end systems.

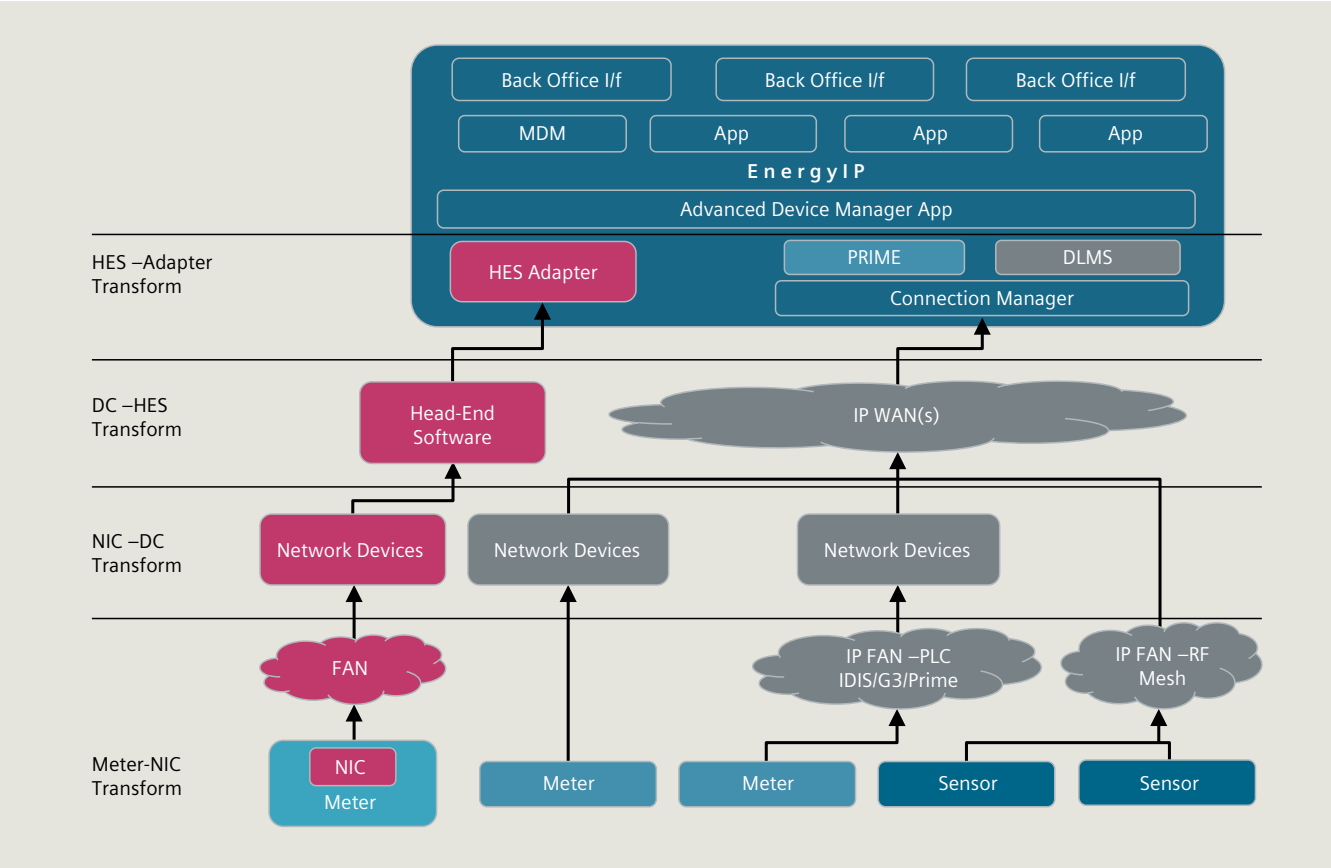

Fig. 7.2-8: Overview of Advanced Device Management

7.2.9 Analytics Foundation

EnergyIP Analytics solution is squarely meant to help utilities leverage this smart meter data, events and alarms, in order to derive demonstrable value to their business.

Siemens Analytics offering comprises three key aspects (fig. 7.2-9):

Built on EnergyIP platform
The EnergyIP platform is the foundational framework for Analytics. Analytics is one of many optional applications that leverages the high performance and scalability of the EnergyIP platform.

Analytics foundation
Analytics Foundation is the base offering for Analytics. It offers the features and functionality that perfectly suit a utility that is beginning to explore different use cases in Analytics or is interested in creating custom reports based on data available in predefined templates. In addition to the above, off-the-shelf reports and comprehensive tools for ETL (Extract, Transform and Load) are all part of the package.

Rich applications
Applications within the Analytics solution offering are focused on specific high-value use cases, and provide support for a streamlined workflow through an intuitive user interface. Applications available currently include: Load Forecasting, Equipment Load Management, Revenue Protection and Power Quality.

The Siemens Analytics solution is built on the EnergyIP platform. Unlike other MDM and CIS vendor's analytics implementations, Siemens Analytics has been built from the ground up to take advantage of the extensive IT and device integrations that are part of AMI deployments. This is borne from the fact that Analytics is built on the same EnergyIP platform that also serves as the foundation for the MDM. This represents a huge benefit for utilities that use EnergyIP-based MDM, as they can then leverage the existing integrations with the head-end systems, AMI adapters, GIS, CIS, and other applications.

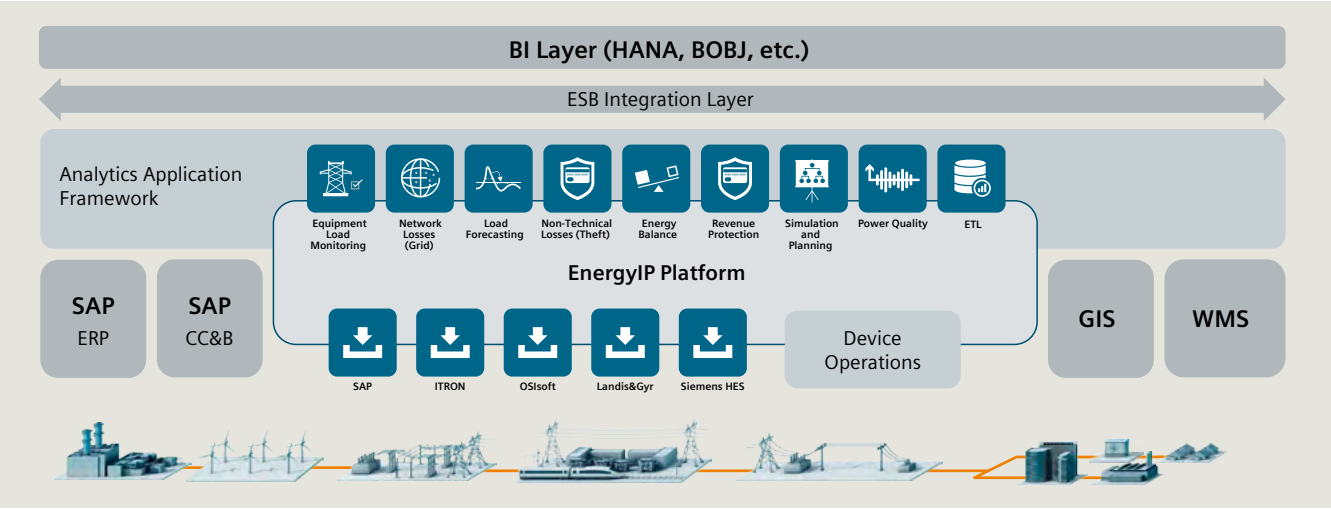

Fig. 7.2-9: Big Data Analytics: Unlocking value and enabling analytics ecosystem

7.2.10 EnergyIP NTL – combating non-technical loss

Energy losses are an unavoidable part of transmission and distribution grids all over the world. One part of these losses has technical explanations, such as those along the cables and connectors. While these technical losses can be mitigated by improved technologies and newer infrastructure, non-technical losses, also called as commercial losses are today's main concern for some utilities around the world. Energy theft is a major source of non-technical losses, and costs billions of dollars each year to the energy industry.

Fig. 7.2-10 describes the challenges of Distribution Service Operators (DSO) in this field and their requests regarding an NTL solution. Smart Grids and smart metering bring innovative technologies that not only automate the power distribution and its billing, but new concepts may reduce energy theft and other commercial losses on-field and also at back-office.

EnergyIP NTL is a Non-Technical-Loss combat solution, which receives, merges and processes metering data with a wide range of rules, algorithms and alarming thresholds, in order to enable electricity distribution operators to detect eventual irregularities on end consumers' consumption.

Target is detection and combat of non-technical loss at large consumers, mainly C&I (Commercial and Industrial), and/or residential consumers in areas with high NTL level, providing revenue recovery to end utilities. Additional operational benefits and savings are also obtained with adoption of Siemens NTL solution.

The EnergyIP NTL software is able to deliver in a single data structure all relevant information related to metering and respective parameters, rules and algorithms for detection of irregularities, potential frauds alarms, and also other data for billing and other purposes, such as grid load control and time-of-use rates.

Typical use case
Metering data from each consumer unit is transmitted to the metering center via an own private or a public telecommunication infrastructure.

EnergyIP NTL evaluates data coming from its database and through specific algorithms (so-called rules), and calculates and indicates the risk of fraud for a particular metering point.

For these analyses, the metering point data is read and compared with some defined parameters in the fraud rules. The system enables the specific configuration of the rules that will be used for analysis, the scheduling set up, the task management, as well as the validation and exhibition of results per risk probability.

Parameter rules
Each algorithm or analysis rule may have specific parameters configured for a particular meter only. There may be rules with no parameter. And there is a default parameter setting, which is valid for all meters in general.

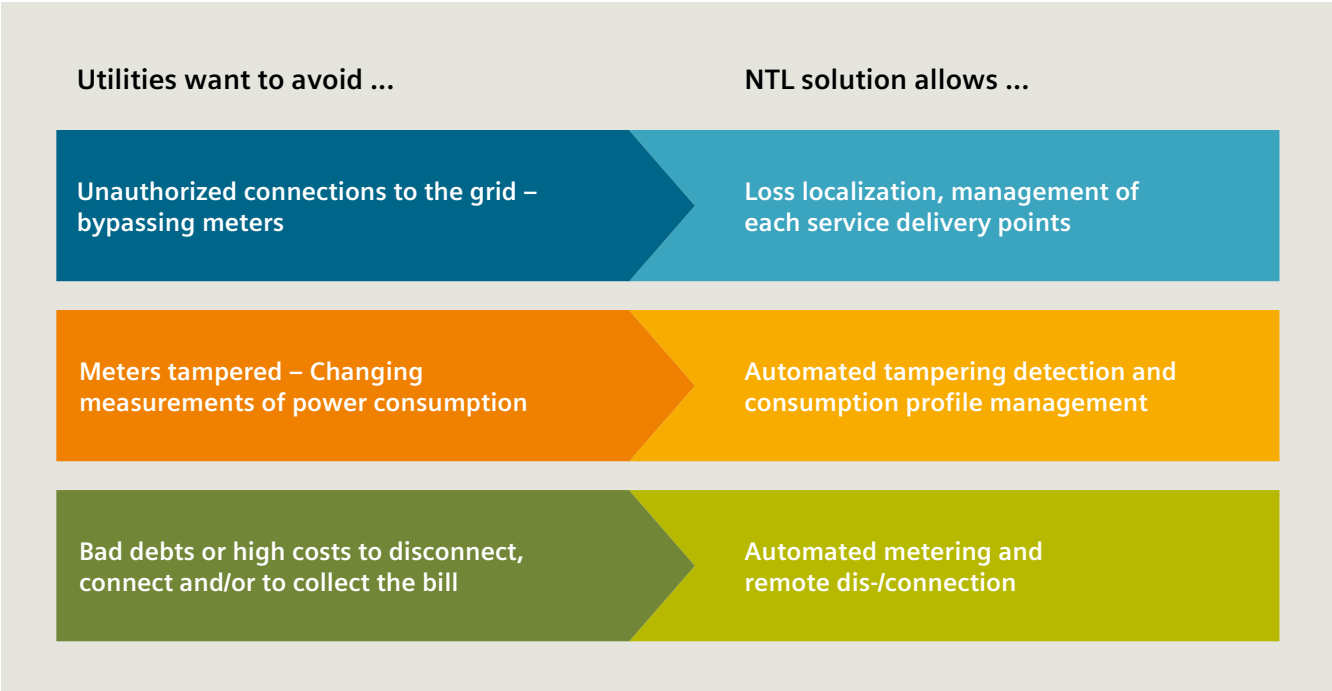

Fig. 7.2-10: Requirements regarding a NTL solution

Scheduling
Analysis is performed automatically by the system running all configured rules in all metering points on a monthly basis. Manual scheduling can also be arranged and configured per rule type and per meter individually or in group.

Exhibition of results (fig. 7.2-11)
After running an algorithm, its results can be filtered and verified in all its details, e.g., total performed rules, how many rules passed or not, discarded results and the calculated fraud risk – according to weighted rules passed or not.

The Advanced Metering Infrastructure AMI allows remote meter reads, dis-/connection of bad debits, meter tampering detection, outage notification, identification of excessive load, and unmetered or unbilled consumption.

EnergyIP NTL solution overview
EnergyIP NTL is connected to the Siemens UDIS head-end system, which reads IEC standard smart meters including the Siemens IM100 and IM300 series. It may be customized to interwork with other third-party HES suppliers.

EnergyIP NTL meter data repository may also be synchronized either with the EnergyIP MDM platform or other data sources, as well as with other corporate and operative systems such as GIS, CIS, etc.

Benefits
Investments by the utilities in EnergyIP NTL pay for itself – with fast payback – due to revenue recovery by the DSO and because of reduction of its operational costs. Utilities can recover overdue bills from delivered but uncharged energy. OPEX reduction comes from the reduction of on-field reads, manual disconnection/reconnection, local inspection, consequent field teams, and also from optimized billing process and possible integration of corporate and operative processes.

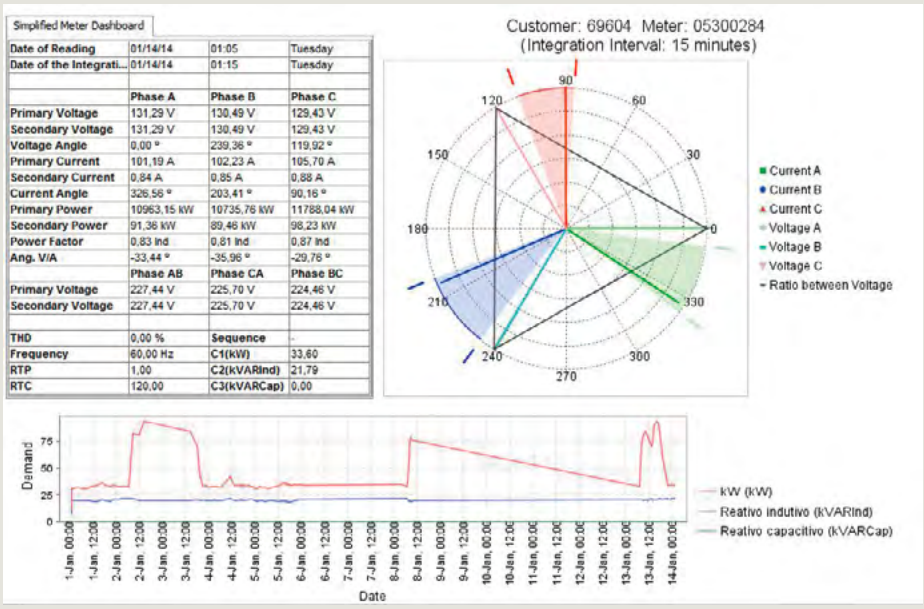

Date of Reading	01/14/14	01:05	Tuesday
Date of the Integrati...	01/14/14	01:15	Tuesday
	Phase A	Phase B	Phase C
Primary Voltage	131,29 V	130,49 V	129,43 V
Secondary Voltage	131,29 V	130,49 V	129,43 V
Voltage Angle	0,00 °	239,36 °	119,92 °
Primary Current	101,19 A	102,23 A	105,70 A
Secondary Current	0,84 A	0,85 A	0,88 A
Current Angle	326,56 °	203,41 °	90,16 °
Primary Power	10963,15 kW	10735,76 kW	11788,04 kW
Secondary Power	91,36 kW	89,46 kW	98,23 kW
Power Factor	0,83 ind	0,81 ind	0,87 ind
Ang. V/A	-33,44 °	-35,96 °	-29,76 °
	Phase AB	Phase CA	Phase BC
Primary Voltage	227,44 V	225,70 V	224,46 V
Secondary Voltage	227,44 V	225,70 V	224,46 V
THD	0,00 %	Sequence	-
Frequency	60,00 Hz	C1(kW)	33,60
RTP	1,00	C2(kVARInd)	21,79
RTC	120,00	C3(kVARCap)	0,00

Fig. 7.2-11: Detailed information obtained from meter reads allows EnergyIP NTL to verify and compare relevant information such as voltage, active power, reactive power, difference of phase angle between voltage and current, etc.

7.2.11 Virtual Power Plants for smart markets

In parallel with the further liberalization of the energy markets, the decentralized generation of electrical power, gas, heat and cold energy becomes more and more important and complex. The generation of these types of energy near to the consumers offers economical and ecological benefits. In this context, interest is directed to so-called virtual power plants. A virtual power plant is a collection of classical generation units such as thermal power plants and smaller decentralized generation units (e.g., wind, PV, biomass, hydro, etc.) or flexibilities offered from regional housing areas or industry that is monitored and controlled by a superordinated energy management system. These assets can be own or assets from partners, offering their flexibility via a web portal, combining their generation capabilities into a virtual power plant. The summarized production capabilities will be traded on various energy markets.

In general, these generation units produce heating and cooling energy as well as electricity (fig. 7.2-12).

At first glance it sounds paradoxical: Although the share of renewable energies continues to grow, the need for enough gas- and coal-fired power plants is still going forward. As wind and photovoltaic is not available all the time, use balancing markets are required for balancing out fluctuating inputs from the renewables. That is why versatile conventional power plants need to cut in to meet the major part of energy demand when the wind is not blowing or the sun is not shining. As energy is getting cheaper and cheaper, short-term markets are coming more into the traders focus. Most of the electricity is bought long time ago (< 1 year), and is being traded day a-head or even intra-day when market prices are getting interesting. As profit is shrinking per MW, fast reaction on market opportunities and amount of MW transactions is important. This is why utilities need to stay connected with all their assets on a real-time basis, and require a reliable short-term forecast of generation capabilities for the corresponding trading period. A virtual power plant can manage this, and show the operator an aggregated view of available capacities and potential markets a trader should vote for.

Frequency Restoration Reserve (FRR) in the European Union Internal Electricity Balancing Market means operating reserve used to restore frequency to the nominal value and power balance to the scheduled value after sudden system imbalance occurrence. Based on the activation time and communication type, various restoration reserves are distinguished.

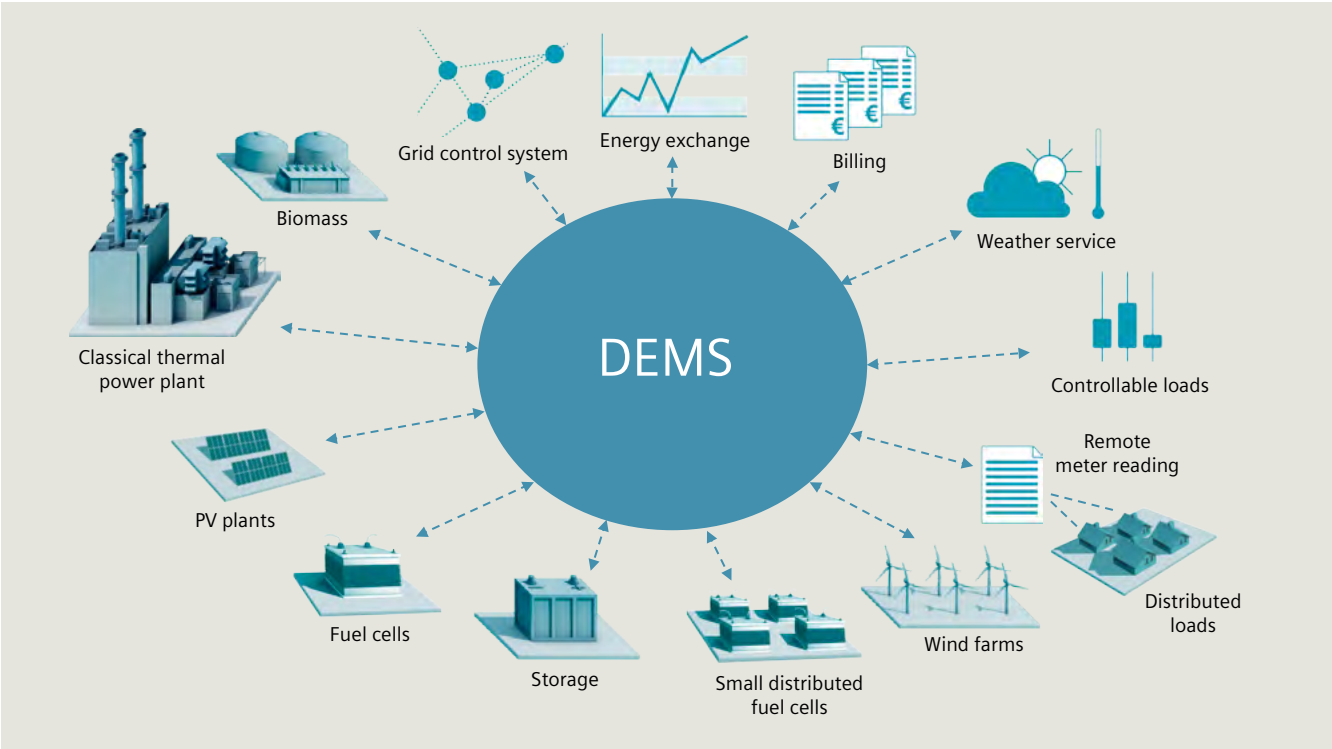

Fig. 7.2-12: EnergyIP DEMS for Virtual Power Plants

Their traditional naming Primary Reserve, Secondary and Tertiary Reserve is changing to FCR (Frequency Containment Reserve), frequency curtailment reserve, aFRR (automatic FRR, typically via ICCP or IEC 60870-5-101), and mFRR (manual FRR). Fig. 7.2-13 shows typical activation times.

The successful operation of a virtual power plant requires the following main components. Fig 7.2-14 describes the typical VPP use case.

1. A forecasting system for the loads and prices that is able to also calculate very short-term forecasts (1 hour) and short-term forecasts (up to 7 days).
2. A forecasting system for the generation of renewable energy units. This forecast must be able to use weather forecasts in order to predict the generation of wind power plants and photovoltaics. This can be supplemented by a portal collecting flexibilities from other generation assets, e.g., industry or other partners.
3. An energy management system that plans, optimizes and monitors the operation of the decentralized power units.
4. An energy data management system which collects and keeps the data that is required for the optimization and the forecasts, e.g., profiles of generation and loads as well as contractual data for customer supply.
5. Market interfaces to various markets, e.g., ancillary reserve (mFRR, aFRR), spot market incl. intra-day market.
6. A powerful front end for the communication of the energy management system with the decentralized power units (which sents out generation schedules and set points).
7. A billing system to allocate earnings.

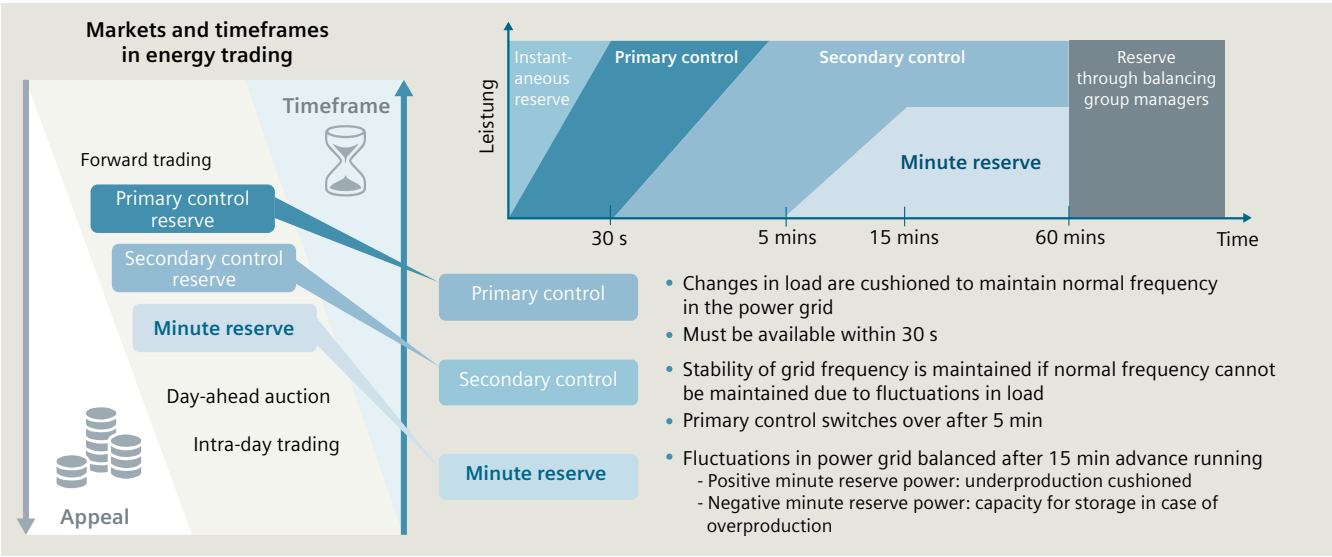

Fig. 7.2-13: Typical activation times of reserve power and appeal of markets

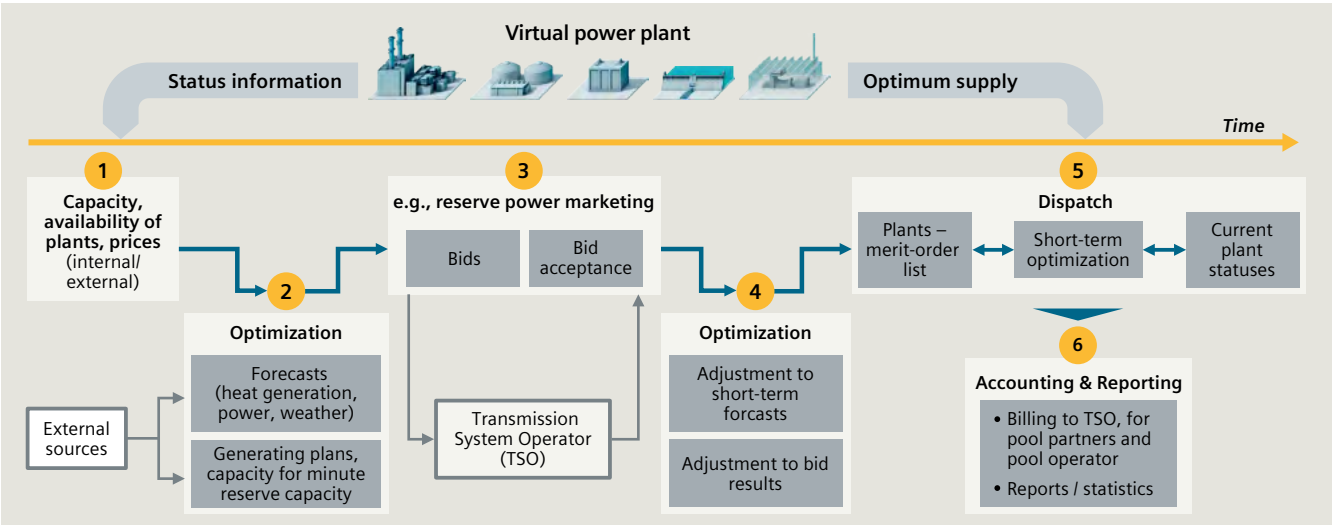

Fig. 7.2-14: Typical use case of a virtual power plant

7.2.12 EnergyIP DEMS – VPP solution overview

Based on the requirements defined in the preceding section, a software package for decentralized energy management called EnergyIP DEMS was developed. The DEMS system is not meant to be a substitute for all possible local automation equipment necessary for operating the components of a virtual power plant. There must be at least that much local automation equipment available to allow the basic operation of the decentralized power units, in order to ensure component and personal safety in the absence of the DEMS system.

The functions of DEMS can be subdivided into planning functions and control functions. The respective planning functions are based on an imported weather forecast, the load forecast, generation forecast, input from other generators / consumers via web portal, and the unit commitment.

Planning phase

Within a DEMS or Virtual Power Plant (VPP), two or more key players exist. The one who owns or operates the system, often called Pool owner / pool manager, and the participating pool partners. Pool partners can either be own or foreign assets. Pool partners nominate their free capacities or flexibility via Excel or, more commonly, via a web portal. The DEMS web portal offers the possibility for pool managers / pool partners to enter master data, plan capability information, and show aggregated generation figures.

For all assets where pool partners are not entering the data into the web portal , the DEMS operation planning and scheduling applications create forecasts with sufficient accuracy. For the characterization of the forecasts, several operating figures are used, such as the average forecast error per day, or the absolute error per day or per forecasting time period. Depending on the main purpose of the virtual power plant, the requirements for the forecast methods may change. If the primary purpose is to reduce the peak load or the balance energy, the forecast has to be very exact in the peak time or times with the high prices for balance energy. Furthermore, the forecast algorithms must be able to adapt rapidly to new situations. For example, a virtual power plant operated by an energy service company must be able to consider changes in the customer structure.

Based on the results of the forecast algorithms and the actual situation of the virtual power plant, the load to be covered/traded can be planned by using the decentralized power units and the existing energy contracts.

The planning functions consider a time period of one to seven days with a time resolution depending on the settlement periods for energy sales and purchases, e.g., 15, 30 or 60 minutes. The planning functions run cyclically (e.g., once a day or less frequently) on manual demand, and can be spontaneously triggered.

The DEMS generation forecast calculates the expected output of renewable energy sources dependent on the forecasted weather conditions. The forecast algorithm is a piecewise linear transformation of two weather variables to the expected power output according to a given transformation matrix (e.g., wind speed and direction for wind power units, light intensity, and ambient air temperature for photovoltaic systems). The transformation matrix can be parameterized according to the unit technical specifications, and/or is estimated on the basis of historical power and weather measurements by applying neural network algorithms.

Based on these calculation results, free capacity can be traded on the various markets. As markets do have various market gate closure dates and times, the user of such a DEMS system needs to have an overview about offered, open and remaining flexibilities for these markets.
Fig. 7.2-15 shows such an overview.

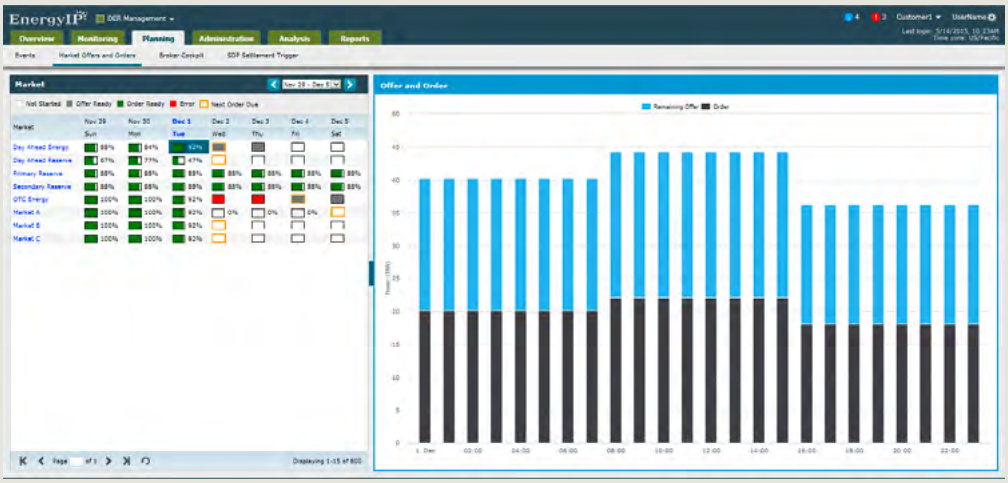

Fig. 7.2-15: Overview of remaining offers / orders per market

Using the awarded trading contracts, other obligations (long-term contracts, district heating supply for a city etc.), and replacement reserve requirements, a final dispatch plan for the next period of time (e.g., next day) will be created. This dispatch plan is used to generate the required generation schedules or ancillary service requests.

A generation schedule consist typically of 96 elements with 15 min each, indicating what amount of electricity has to be generated within each quarter of an hour. As connecting a generation asset to the grid or following a new generation schedule needs some time, the DEMS system also has to manage start, stop, as well as ramp up and down of such an asset. Ancillary service requests have to be added to such a generation schedule. For FCR and aFRR, this is mostly done via an electronic signal; for mFRR by telephone or xml-file instructions. As most of the TSO's charge penalties for deviations on a 15 min basis, the system considers the integral of the power delivered on a continuous base, and compares the figures with the plan.

Execution phase / control functions

The DEMS control applications provide control and supervision capability of all generation units, storage units and flexible demands, as well as control capability to maintain an agreed electrical interchange energy profile.

Therefore, a virtual power plant needs a bidirectional communication between the decentralized power units and the control center of the energy management system on the one hand, and in some cases to a TSO (if VPP offers ancillary services). Larger units are mostly already equipped with a fast fiber-optic communication infrastructure, but in future, with an increasing number of small decentralized power units, it is crucial that the right mix of communication technologies is deployed. This mix depends, e.g., on the availability of fiber-optic cable, the frequency spectrum for wireless technologies (WiMAX), the length of power cables for Broadband Power-line carrier or the coverage of private/public cellular networks (LTE). Siemens is contributing to the upcoming standard "IEC 61850-7-420 Ed.1: Communication networks and systems in substations – Part 7-420: Communications systems for distributed energy resources (DER) – Logical nodes."

The DEMS generation management function allows the control and supervision of all generation and storage units of the virtual power plant. Dependent on the control mode of the respective unit (independent, manual, schedule or control mode) and the unit parameters (minimum/maximum power, power gradients, energy content), the actual state (start-up, online, remote controllable, disturbed) and the actual power output of the unit, the start/stop commands and power setpoints for the units are calculated and transmitted via the command interface. Furthermore, the command response and the setpoint following status of the units are supervised and signaled.

The DEMS online optimization and coordination function dispatches the overall power correction value to all individual generation units, storage units, and flexible load classes that are running in control mode. The distribution algorithm works according to the following rules: First, the actual unit constraints (e.g., minimum and maximum power, storage contents, power ramp limitations) must be considered. Second, the overall power correction value should be reached as fast as possible. And third, the cheapest units should be used for control actions. "Cheapest" in this context means that the incremental power control costs of the units around their scheduled operating points are taken as a reference.

Based on the historic, actual and future generation plan for a single or the entire assets, the display (fig. 7.2-16) shows the DEMS operator an overview. The GUI displays called, sold and available energy, and highlights critical situations when the operator moves his cursor over the display.

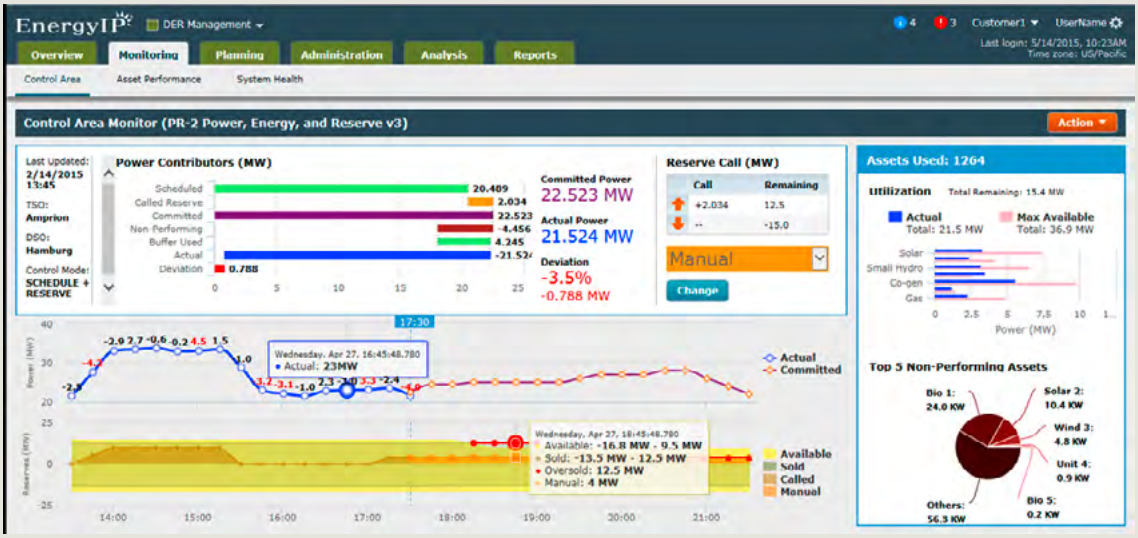

Fig. 7.2-16: DEMS Control Area Monitor

7.2.13 EnergyIP DRMS (Demand Response Management System)

Introduction
Demand response refers to all functions and processes applied to influence the behavior of energy consumption. This can range from simple signaling, e-mail, SMS, or a phone call to a person who switches a load on or off, to fully integrated load management, where many consumption devices are dynamically controlled according to availability or to the price of energy. Since the demand for electrical energy in many cases is closely connected to the demand for alternative forms of energy, heating and cooling energy, or mechanical energy, demand response solutions must reach far beyond the electrical grid itself. In particular, optimization must include all energy forms which are interconnected.

The imminent challenges in energy supply can no longer be met solely by actively managing generation. Load flexibility must also be actively included in planning and operation. The old principle that "generation will follow consumption" is changing as demand adapts to supply.

EnergyIP DRMS enables utilities, TSO's, Independent System Operators (ISO), Regional Transmission Operators (RTO), and retail providers to create an environment where they can proactively manage energy demand. This solution provides a framework and tools for various stakeholders to take action for their demand response programs without costly load shedding and service interruption during peak and unpredictable scenarios.

EnergyIP DRMS is the solution for automated load management. This system makes it possible to selectively influence power consumption by reliably forecasting and planning loads and their behavior. As a result, utilities can make optimum use of existing resources and implement new, innovative business models, for example, by participating in energy and regulated markets or by supporting grid operation.

Load management also offers the possibility of interacting with consumers, which allows optimal planning and implementation of load control measures. As a result, end consumers and industry can also benefit from active integration in business processes.

As Siemens sees that demand response is becoming also more important in Europe and Asia, Siemens has integrated the VPP DEMS and DRMS to an integrated solution offering, allowing the customer to use a common platform for both business processes and thus generate additional value to a utility.

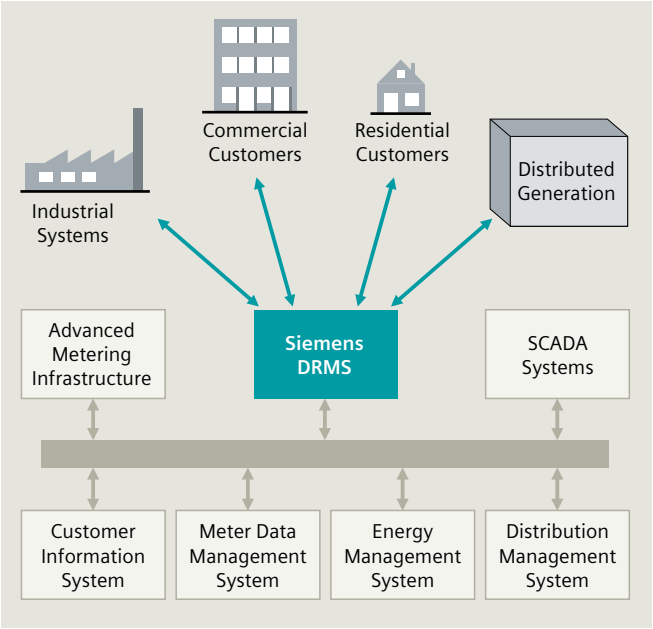

Fig. 7.2-17: EnergyIP DRMS integration

EnergyIP DRMS – solution overview
EnergyIP DRMS is a proven software application that allows utilities to manage all aspects of their demand response (DR) programs through a single, integrated system. EnergyIP DRMS has been designed flexibly enough to be deployed in various environments, from vertically integrated utilities to generation and transmission utilities, to retail electric providers, and to other types of aggregators.

Integration
EnergyIP DRMS has the ability to interface with other control room, back office, and customer-facing applications through bidirectional communications so that DR related assets and data are always accessible (fig. 7.2-17 EnergyIP DRMS integration). Billing and settlement is accurate and accelerated, because DRMS integrates to meter data management (MDM) and customer information systems. DRMS also has a SCADA interface to enable real-time demand monitoring and automated "surgical" control of substations.

Surgical demand response

EnergyIP DRMS uses a flexible load aggregation engine that allows aggregations to be defined by substation, feeder line, zip code, map interface, or several other associations. This "surgical" approach uses DR program resources more efficiently and allows utilities to "condition the load" so that grid conditions are more favorable to safe and reliable operations. For example, DRMS can be configured to automatically execute DR events on loads serviced by specific substations or feeder lines when they are under operating stress and threaten reliability. Surgical DR gives utilities the ability to limit or avoid outages, restoration costs, and contributes to longer, better performing assets (see fig. 7.3-18).

Scalability

The EnergyIP DRMS platform allows utilities to scale DR capacity in a cost-efficient way by automating processes across multiple programs and all customer classes. DRMS automates event notification and execution according to program definitions. After an event, DRMS automatically performs measurement and verification by retrieving billing grade meter data and then calculating baselines and billing determinants at the individual site and aggregation levels. DRMS has reporting capabilities to monitor the performance of DR programs and events. Collectively, these capabilities give utilities almost instant financial metrics to evaluate DR performance.

Workflow Management

EnergyIP DRMS provides the ability to configure workflow processes so that demand response customers, events, and settlements are managed according to utility business processes and program guidelines. This structure ensures that business objectives are achieved by executing events in a consistent manner with a defined workflow processes.

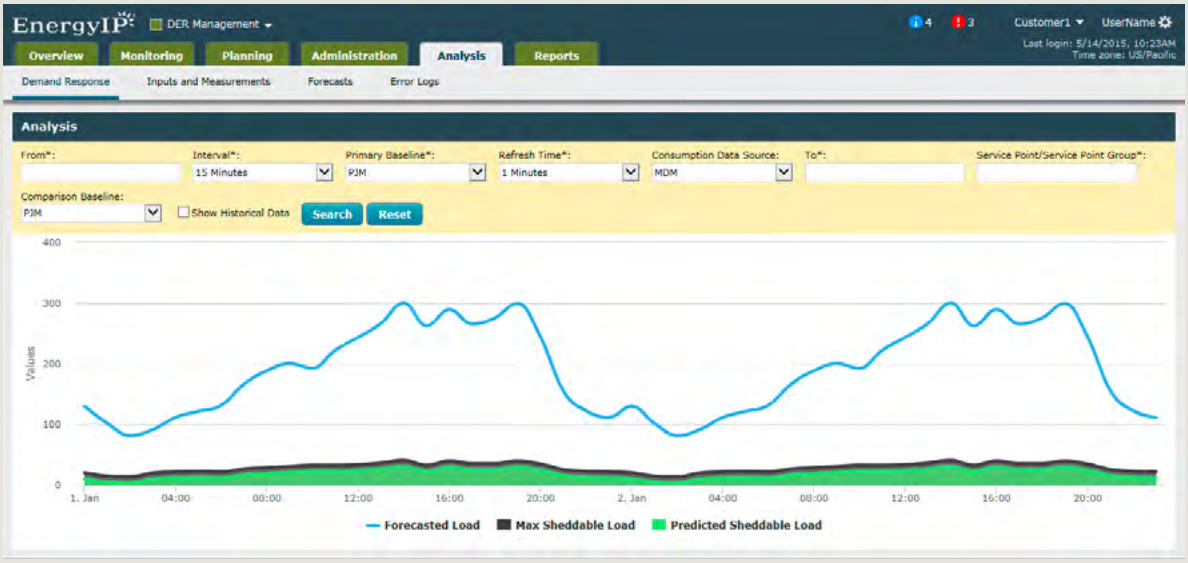

Fig. 7.2-18: EnergyIP user interface for Load Management

1
2
3
4
5
6
7
8
9
10
11
12
?

7.3 Managed Services

Siemens Managed Services offers the global provision of the Energy Management Digital Grid Business Unit portfolio of grid control and grid application solutions as a service. This wide portfolio from smart meters, communications and billing, all the way to data centers or turnkey grid control solutions with SCADA, DMS and ADMS, forms the core of Siemens' service offering.

Siemens delivers enhanced financial, technical and operational value to customers through enduring service partnerships that encompass consult, design, build, operate and maintain functions throughout a lasting successful relationship and service lifecycle.

As shown in fig. 7.3-1, the digital grid portfolio offered is a collection of services that can be taken separately or together (fig. 7.3-2).

At the heart of the service offering is the concept of Siemens providing more immediate results for utility customers than traditional projects can do. The service outcomes within Service Level Agreements (SLAs) can be 'consumed' more quickly than a traditional project can purchase, install, set up, configure complex integrations between third parties, and begin operation of an overall solution in-house.

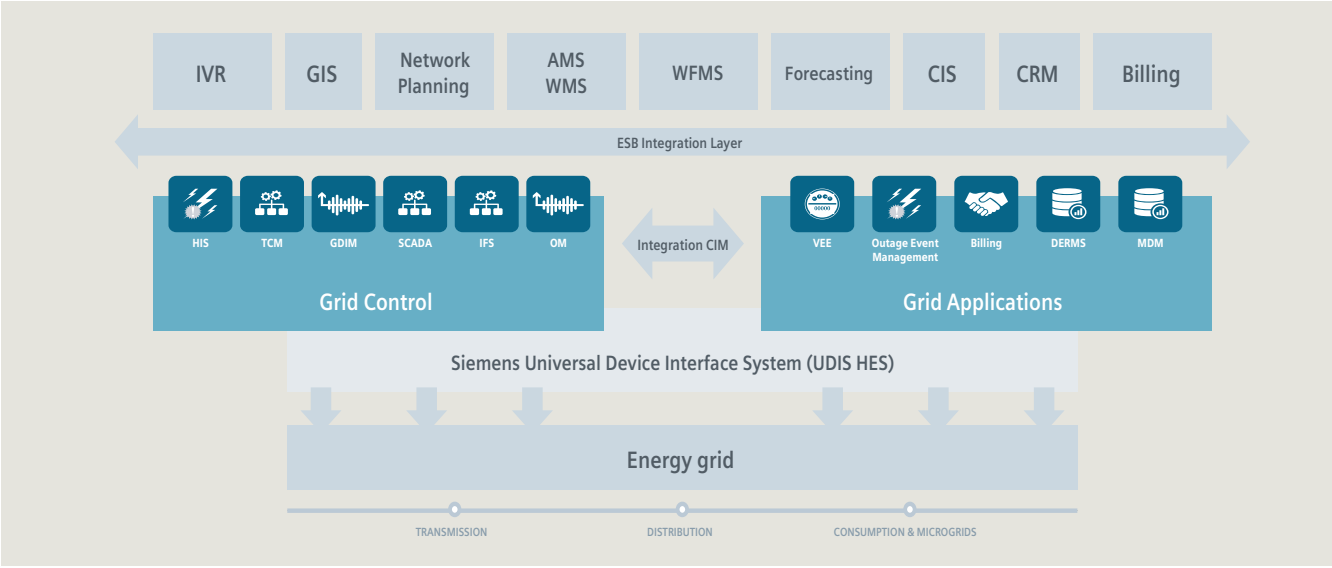

Fig. 7.3-1: Digital grid portfolio

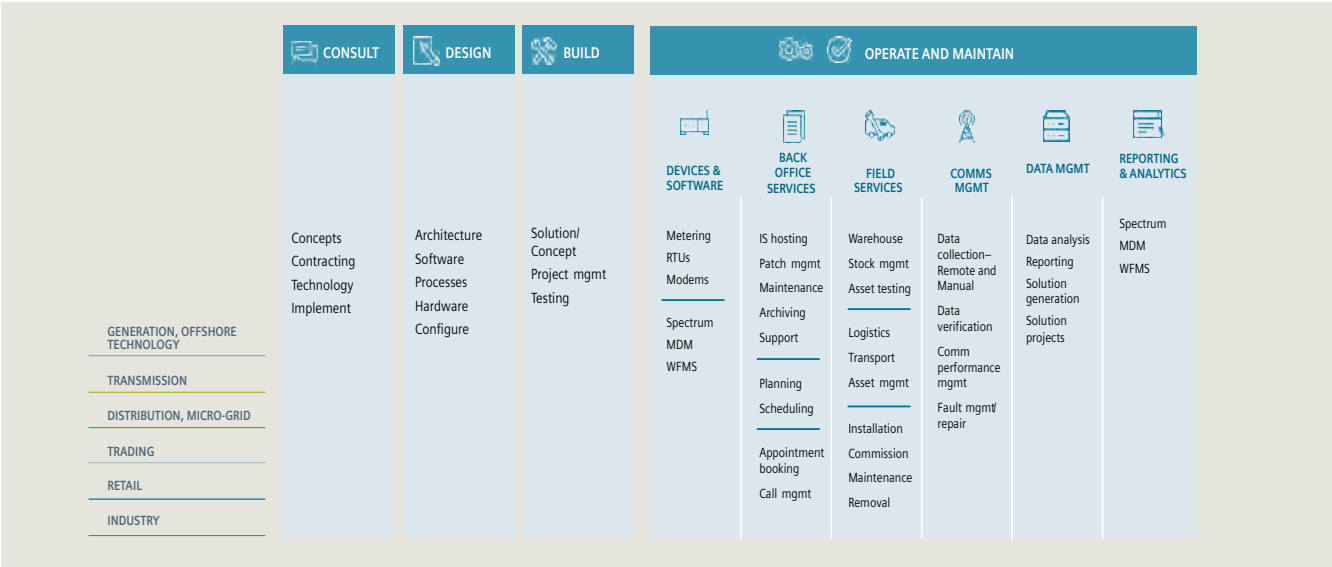

Fig. 7.3-2: Service offerings

For instance, Siemens offers a reliable, secure and cost-efficient alternative to a traditional MDM project which would require the procurement of licenses and prerequisites, the installation of dedicated hardware in a data center, the building up of a dedicated communications infrastructure and a fault-tolerant computing environment, and the installation, support and operation of an application stack to support the solution. This compared to 'consuming' an MDM service from Siemens which would supply data as a service under a strict set of SLAs. No worrying about any special hardware, special resources that are lengthy to hire and expensive, special technology interoperability requirements, etc. (fig. 7.3-3).

The two main service areas are Meter-to-Cash as a service and SCADA as a service.

The meter-to-cash service options include:
- Smart meter procurement and installation service
- Communications network setup service
- Smart meter data collection, validation and storage service
- Smart meter alarm and event management service
- Billing usage calculation and delivery service
- Smart meter consumer data web-portal service
- Prepayment service
- Automated residential electric connection / disconnection service
- Demand response management service
- Analytics, including: non-technical loss analysis and reporting service.

SCADA as a service option includes:
- Supervisory Control and Data Acquisition (SCADA)
- Distribution Management (DMS) and Advanced DMS
- Outage Management (OMS)
- Distribution Network Applications (DNA)
- Fault Location (FLOC)
- Fault Isolation and Service Restoration (FISR).

Siemens' services offer the advantages and benefits enjoyed by large utilities on a monthly subscription basis, including:

- Supervisory Control and Data Acquisition (SCADA)
- Stat-of-the-art software and hardware technology
- Industry-standard degree of availability with multiple levels of redundancy
- High levels of physical and cyber security
- Increased data security by double or mirrored data saving
- Dual telecom provider connection
- Data encryption
- 24x7 system monitoring and customer service.

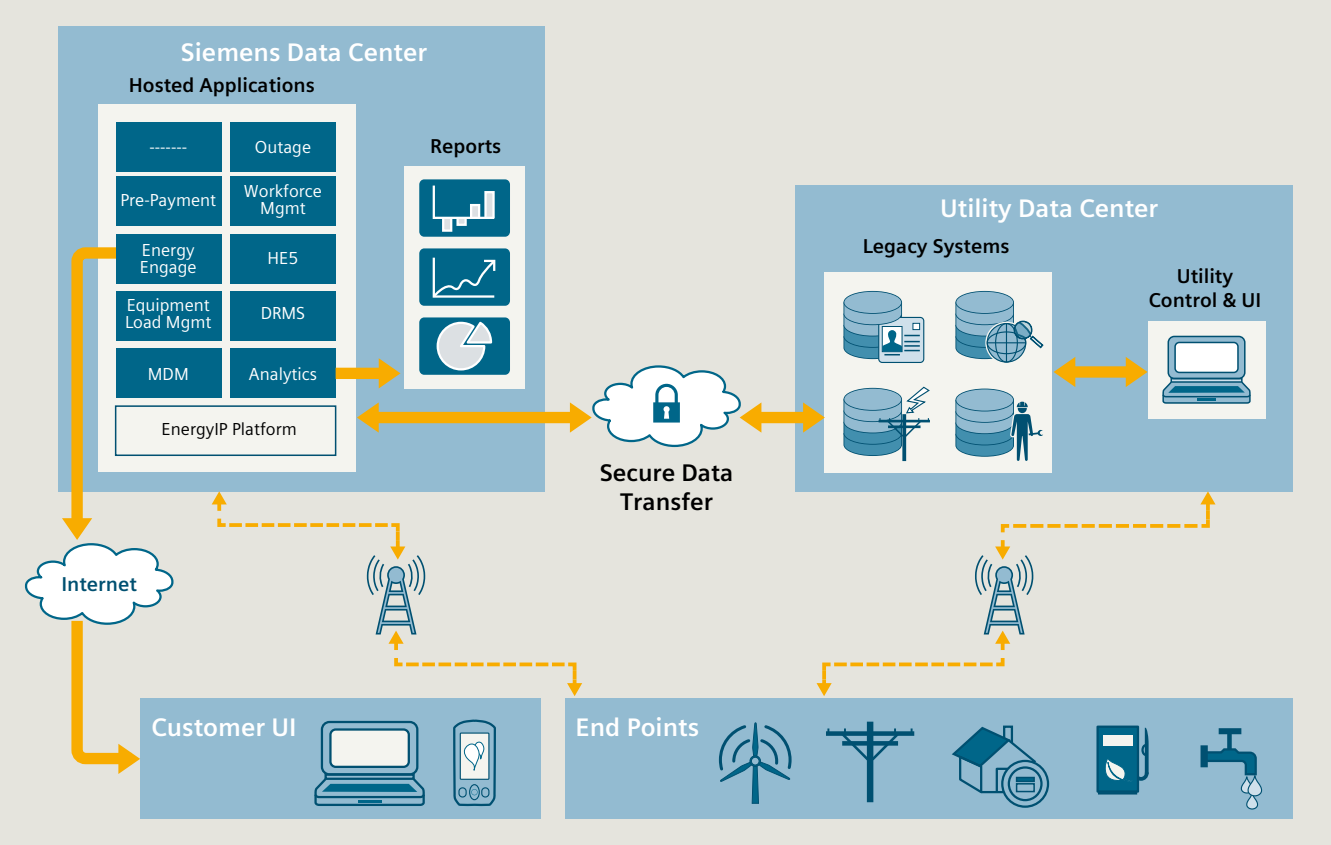

Fig. 7.3-3: Managed services – Overview

In the UK, for example, Siemens offers a wide variety of services mostly aimed at the provision of services into the distribution utilities, some innovative retail utilities, and services to industry in the form of sub-metering and energy efficiency programmes. In Spain, Siemens operates a control center based on the leading Spectrum Power platform that integrates renewable energy operations from multiple parties, and this is operated as a service. In South Africa, Siemens operates a security of revenue solution that provides a full meter-to-cash service for a service provider under an innovative business model arrangement. In South America, Siemens operates a non-technical loss prevention service that blends hardware and software in order to eliminate losses for utility customers. The underlying point is one of the provision of multiple leading technical solutions as services in flexible ways that derive success and great value for Siemens' customers.

Siemens Managed Services helps focus the customer's core business by allowing to choose a menu of services in a mix that is just right for the considered business. From staff augmentation to overcoming particular objectives for a couple of months, through a normal three-year service reaching far beyond what a particular project can achieve, and up to a complete outsourcing of multiple non-core processes.

8 Communication network solutions for transmission and distribution grids

8.1 Solutions for transmission grids (communication backbone) 502

8.1.1 Fiber-optic communications on the way to carrier and utility grade packet transport networks 502

8.1.2 PowerLink – power line carrier for high-voltage lines 504

8.1.3 SWT 3000 – teleprotection for high-voltage lines 506

8.1.4 Coupling unit AKE 100 508

8.1.5 Voice communication with PowerLink 508

8.1.6 Connection Master 510

8.2 Control center communication 512

8.3 Solutions for distribution grids (backhaul / access communication) 513

8.3.1 Introduction 513

8.3.2 Communication infrastructures for backhaul and access networks 514

8.3.3 Smart metering turnkey solution 518

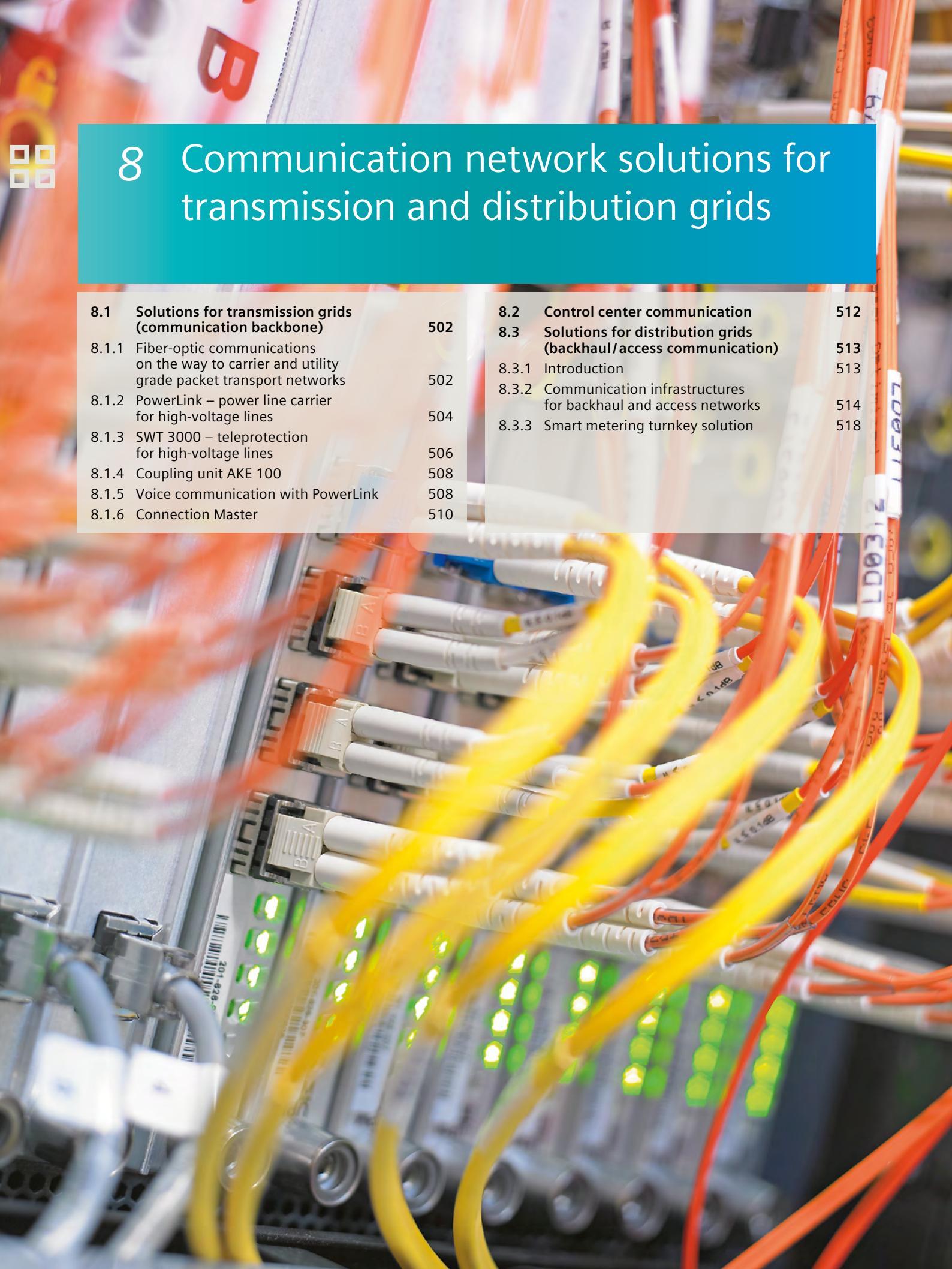

1
2
3
4
5
6
7
8
9
10
11
12
?

A secure, reliable and economic power supply is closely linked to a fast, efficient and dependable communication infrastructure. Planning and implementation of communication networks require the same attention as the installation of the power supply systems themselves (fig. 8.0-1).

Telecommunication for utilities has a long history in the transmission level of the power supply system and Siemens was one of the first suppliers of communication systems for power utilities. Since the early 1930s Siemens has delivered power line carrier equipment for high-voltage systems. In today's transmission systems, almost all substations are monitored and controlled online by Energy Management Systems (EMS). The main transmission lines are usually equipped with fiber-optic cables, mostly integrated in the earth (ground) wires (OPGW: Optical Ground Wire) and the substations are accessible via broadband communication systems. The two proven and optimal communication technologies for application-specific needs are Synchronous Digital Hierarchy (SDH) and Multi-Protocol Label Switching (MPLS) solutions. Fiber-optic cables are used whenever it is cost-efficient. In the remote ends of the power transmission system, however, where the installation of fiber-optic cables or wireless solutions is not economical, substations are connected via digital high-voltage power line carrier systems.

The situation in the distribution grid is quite different. Whereas subtransmission and primary substations are equipped with digital communication as well, the communication infrastructure at lower distribution levels is very weak. In most countries, less than 10 % of transformer substations and ring-main units (RMU) are monitored and controlled from remote.

The rapid increase in distributed energy resources today is impairing the power quality of the distribution network. That is why system operators need to be able to respond quickly in critical situations. A prerequisite for this is the integration of the key ring-main units as well as the volatile decentralized wind and solar generation into the energy management system, and thus into the communication network of the power utilities. Because the local environment differs widely, it is crucial that the right mix of the various communication technologies is deployed. This mix will need to be exactly tailored to the utilities' needs and the availability of the necessary infrastructure and resources (e.g., availability of fiber-optic cables, frequency spectrum for wireless technologies, or quality and length of the power cables for broadband power line carrier).

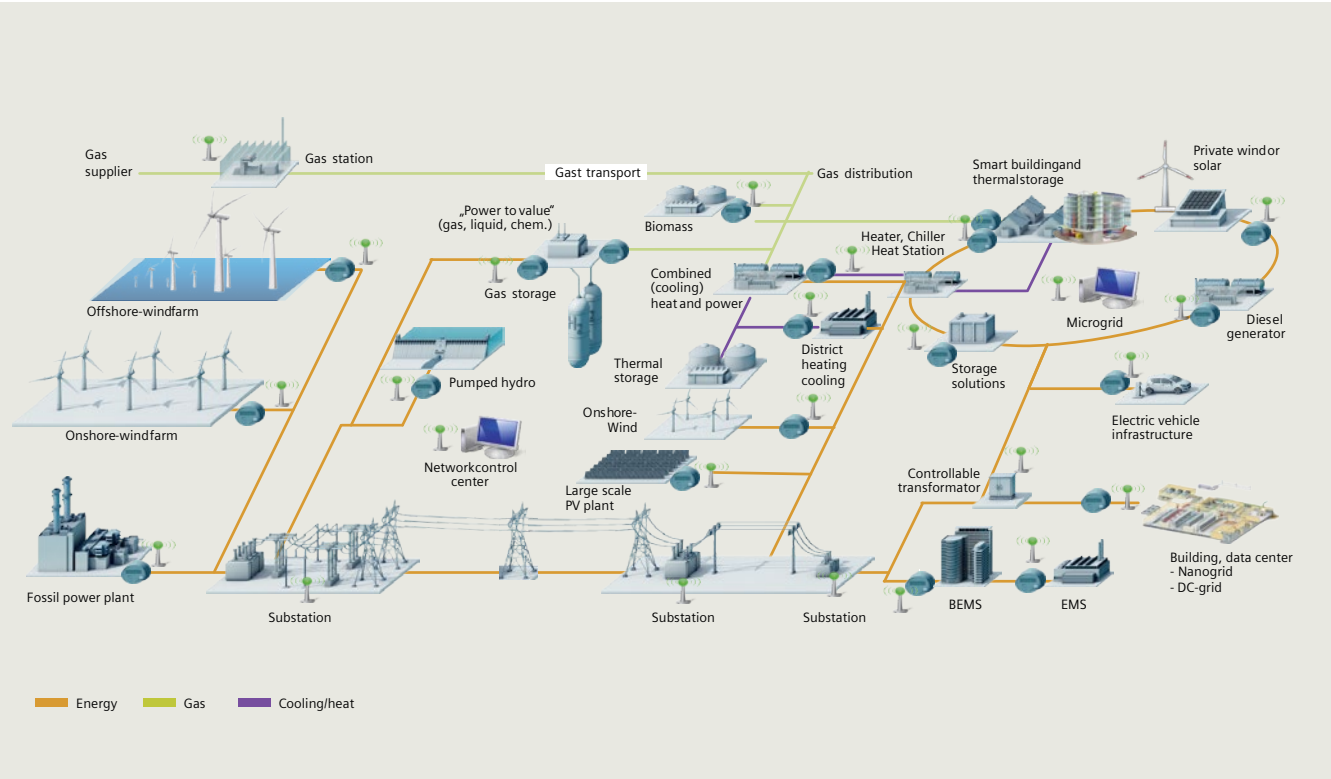

Fig. 8.0-1: Siemens offers complete communication network solutions to build a Smart Grid for power utilities

In the consumer access area, the communication needs are rising rapidly as well. The following Smart Grid applications request a bidirectional communication infrastructure down to consumer premises, or to the loads.

- Exchange of conventional meters with smart meters, which provide bidirectional communications connections between the consumer and energy applications (e.g., meter data management, marketplace, etc.).
- Management of consumers' energy consumption, using price signals as a response to the steadily changing energy supply of large distributed producers.
- If a large number of small energy resources are involved, the power quality of the low-voltage system must be monitored, because the flow of current can change directions when feed conditions are favorable.

The selection of a communication solution depends on the customer's requirements. If only meter data and price signals are to be transmitted, narrowband systems such as narrowband power line carriers or GPRS modems are sufficient. For smart homes in which power generation and controllable loads (e.g., appliances) or e-car charging stations are to be managed, broadband communication systems such as fiber-optic cables, power line carriers or wireless solutions (e.g., LTE) are necessary.

For these complex communication requirements, Siemens offers tailored ruggedized communication network solutions for fiber optic, power line or wireless infrastructures, based on the standards of the energy industry. Naturally, this also includes a full range of services, from communication analysis to the operation of the entire solution (fig. 8.0-2).

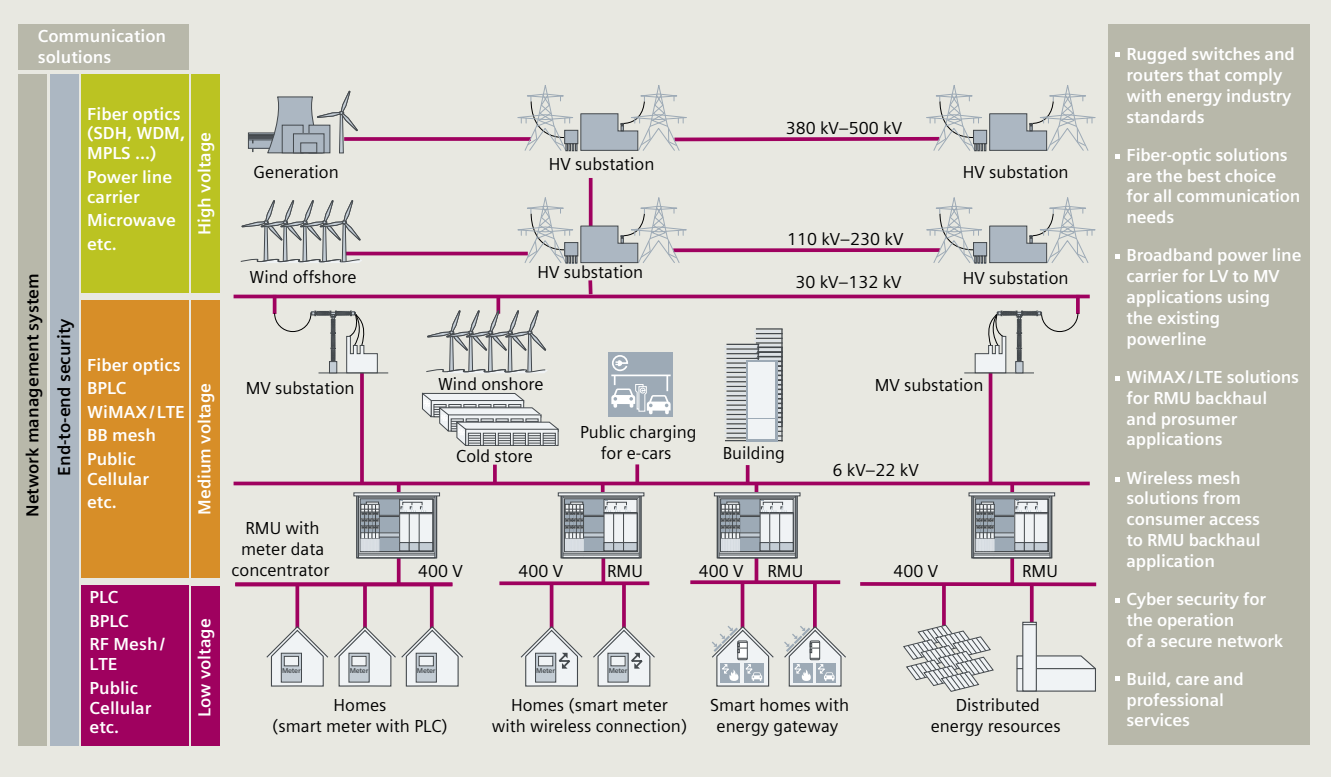

Fig. 8.0-2: Communication network solutions for Smart Grids

8.1 Solutions for transmission grids (communication backbone)

8.1.1 Fiber-optic communications on the way to carrier and utility grade packet transport networks

Today – Synchronous Digital Hierarchy (SDH) plus Plesiochronous Digital Hierarchy (PDH) access multiplexer solutions

Today, SDH solutions in combination with PDH access multiplexer are used mostly by utilities for the communication requirements in high-voltage networks. Siemens offers for these demands the latest generation of SDH equipment, commonly referred to as NG (Next Generation) SDH systems or Multi-Service Provisioning Platforms (MSPP).

NG SDH technology combines a number of benefits that makes it still well-suited to the needs of power utilities. Among those benefits are high availability, comprehensive manageability, and monitoring features. Ethernet-over-SDH provides the capacity to transport packet-based traffic over the SDH backbone with high reliability and low latencies. State-of-the-art NG SDH systems are highly integrated, providing the requested capabilities for utilities in a single device.

At the subscriber side there is still a need to operate a number of different systems with conventional communication interfaces in today's substations (e.g., FXS, FXO, E&M, V.24, X.21, etc.). For this purpose, so-called PDH access multiplexers are used, which provide the requested interfaces, bundle the communication signals, and pass them on to the NG-SDH systems.

Fig 8.1-1 shows a typical NG-SDH solution with connected PDH Access Multiplexer.

Migration to highly available (carrier and utility grade) Multi-Protocol Label Switching (MPLS) networks

The SDH technology, combined with PDH multiplexer, is a well-proven solution for the manifold communication requirements of the transmission utilities.

But meanwhile new requirements arise, which clearly identify the limits of the SDH / PDH technology. Especially the demand for further cost savings, above all the OPEX part, is the main challenge for the communication departments of the utilities. At the same time, the portion of packet-based data (Ethernet and IP) in the wide area networks, caused by new Ethernet- and IP-based systems (e.g., new IEC 104 RTUs, IEC61850 protection systems, sensors, IP telephony, IP CCTV, etc.) is increasing dramatically.

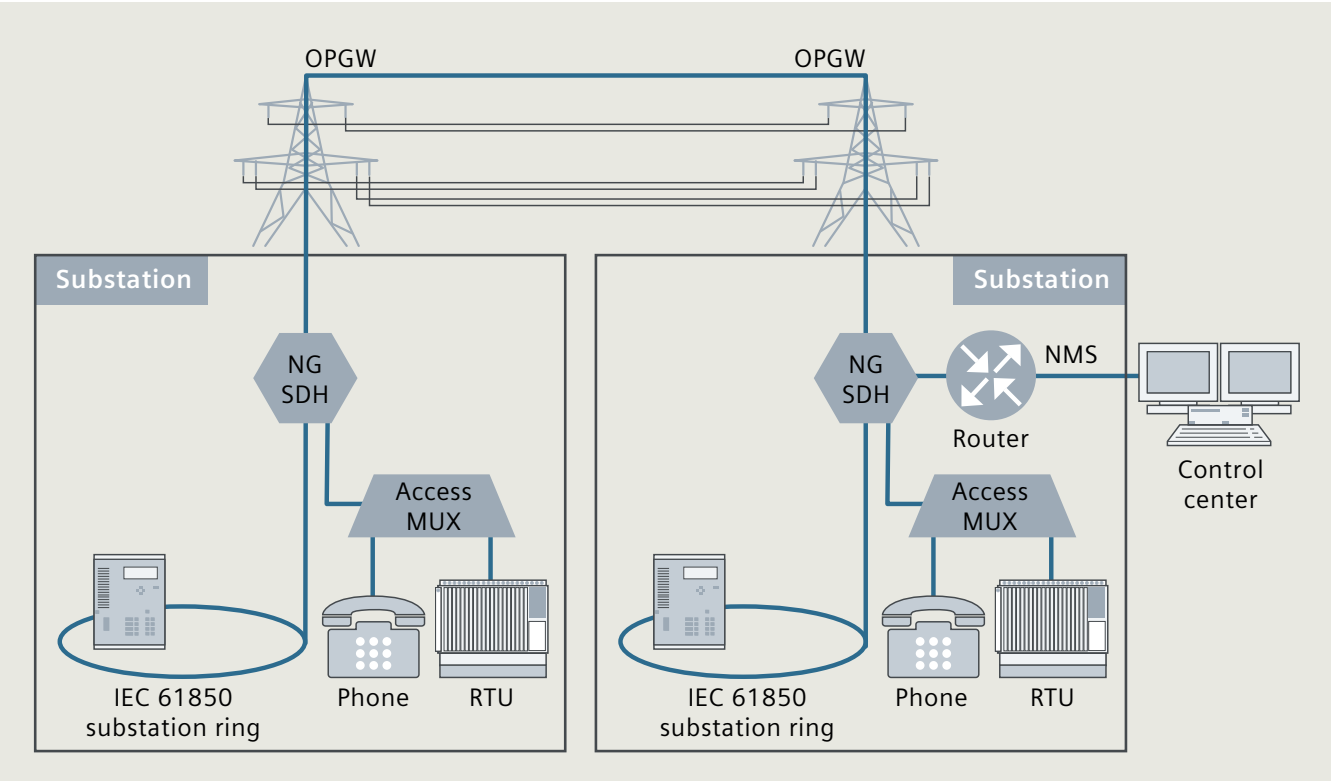

Fig. 8.1-1: Typical NG SDH solution for transmission grids

In order to follow the general trend of the telecom industry and the roadmaps of the network manufacturers, the existing traditional communication networks need to be migrated into highly available, packet-based hybrid systems with low latency.

However, these packet-based optical networks need to meet the specific communication requirements of the transmission network operators. The most important requests are:

- Cost-optimized installation and operation of the network
- Low latency, jitter- and connection-oriented services
- Use for critical Smart Grid applications (e.g., distance and differential protection)
- Easy network extension
- Support of conventional PDH communication interfaces.

In order to meet these requirements, it is advisable to stepwise migrate the installed SDH / PDH communication infrastructure to a packet-based, highly available (carrier and utility grade) and standardized MPLS transport network, which integrates, besides Ethernet, also conventional interfaces.

This means that MPLS systems offer the integration of voice, data and protection signals into one system. This allows the operation of older systems during a transition period.

Fig 8.1-2 shows a typical MPLS communication network.

In a final stage, Ethernet would be the single communication interface, which will be used in the backbone as well as in the access network.

Based on this easy network structure in combination with a powerful Network Management System (NMS) and intelligent network functions, daily network configuration tasks and other service work can be performed fast and straightforward. This is the basis for further OPEX reductions.

Benefits of a MPLS communication network

- Exceptionally cost-efficient operation of the network
- Supports all latency critical Smart Grid applications
- SDH-like look-and-feel (e.g., central NMS, fixed communication paths)
- Efficient use of the available transmission bandwidth
- Supports the conventional interfaces, and is therefore perfectly applicable for a stepwise migration from SDH to an Ethernet- and IP-based NG network.

Siemens offers a wide range of end-to-end solutions for utility grade telecommunication networks, and supports with its Smart Grid knowledge a smooth migration from today's TDM-based networks towards packet-based networks.

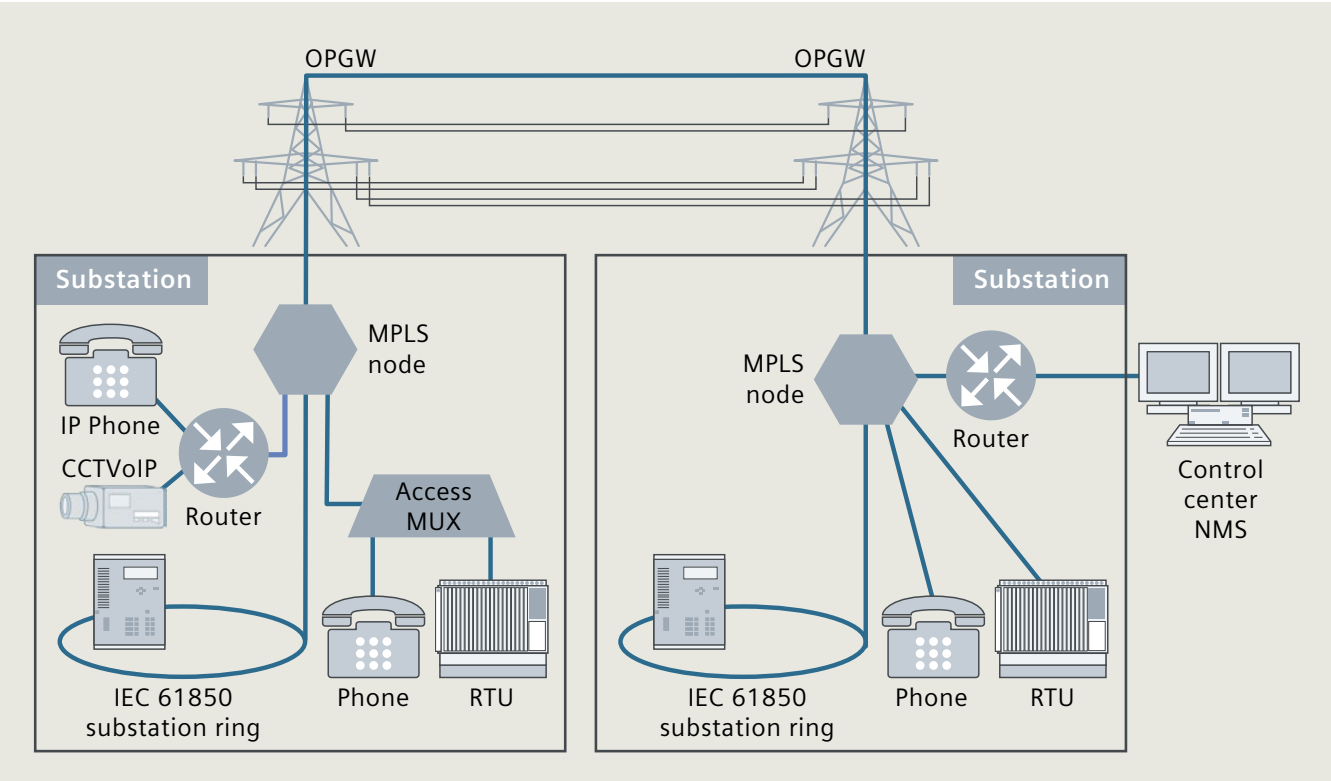

Fig. 8.1-2: MPLS communication solution for transmission grids

8.1.2 PowerLink – power line carrier for high-voltage lines

The digital power line carrier system PowerLink from Siemens (fig. 8.1-3) uses the high-voltage line between substations as a communication channel for data, protection signals and voice transmission. This technology, which has been applied over decades, adapted to the latest standards, and has two main application areas:

- As a communication link between substations where a fiber-optic connection does not exist or would not be economically viable
- As backup system for transmitting the protection signals, in parallel to a fiber-optic link.

Fig. 8.1-4 shows the typical connection of the PowerLink system to the high-voltage line via the coupling unit AKE 100, coupling capacitor.

Fig. 8.1-3: PowerLink system

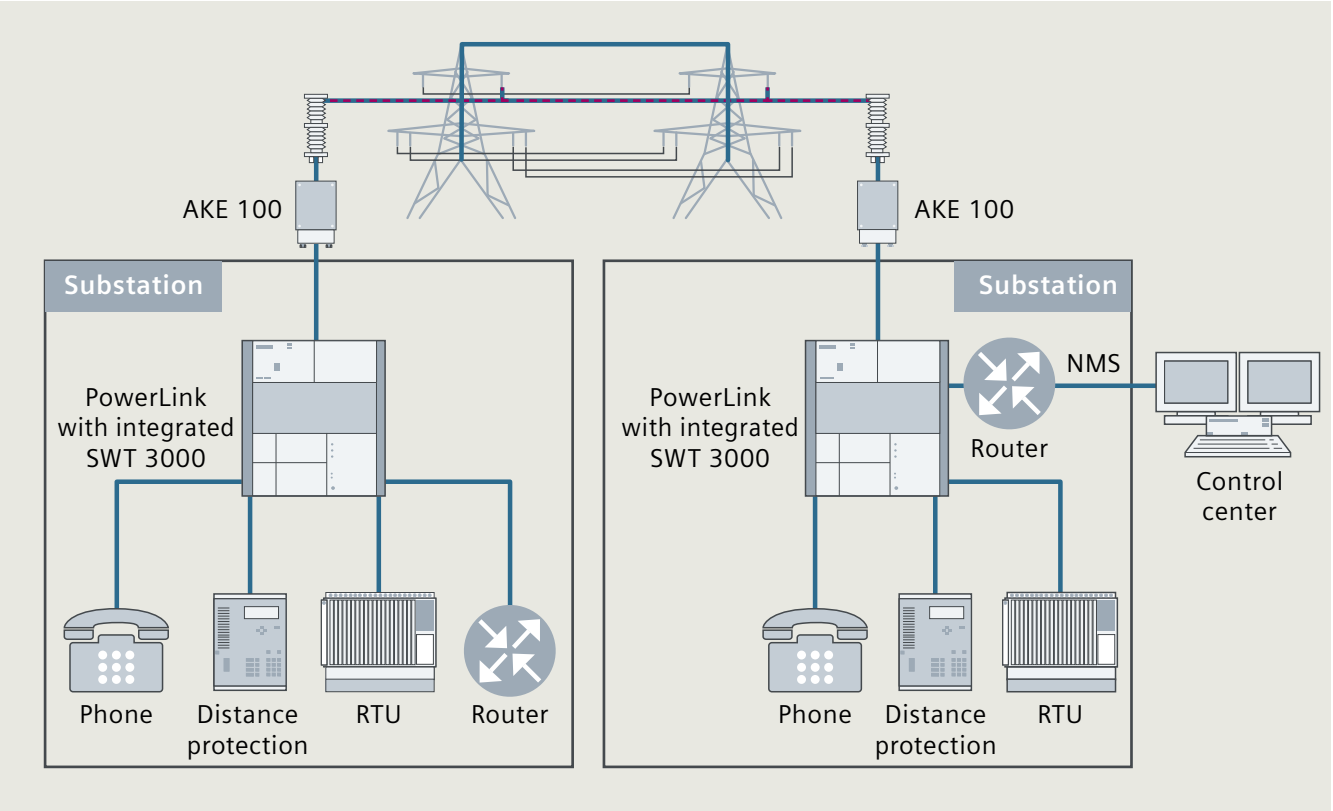

Fig. 8.1-4: PowerLink high-voltage line communication

Flexibility – the most important aspect of PowerLink

Versatility is one of the great strengths of the PowerLink system. PowerLink can be matched flexibly to the customer's infrastructure (table 8.1-1).

Multi-service device

PowerLink offers the necessary flexibility for transmitting every service the customer might want in the available band. All services can be combined in any way within the available bandwidth / bit rate framework.

Bridge to IP

IP functionality is best suited for the migration from TDM to packet-switched networks. PowerLink offers electrical and optical Ethernet interfaces, including an integrated L2 switch, extending the IP network to remote substations with a bit rate up to 320 kbps.

Optimal data throughput under changing environmental conditions

PowerLink adapts the data rate to changes in ambient conditions, thus guaranteeing maximum data throughput. Thanks to PowerLink's integral prioritization function, which can be configured for each channel, routing of the most important channels is assured even in poor weather conditions.

Variable transmission power

The transmission power can be configured via software in two ranges (20 – 50 W or 40 – 100 W), based on the requirements of the transmission path. This makes it easy to comply with national regulations and to enable optimized frequency planning.

Maximum efficiency – the integrated, versatile multiplexer (vMUX)

A large number of conventional communication interfaces today (e.g., a/b telephone, V.24, X.21, etc.) and in the foreseeable future must be operated in a switching station. For this purpose, PowerLink uses an integrated versatile multiplexer that bundles these communication forms together and transmits them by PLC. The vMUX is a statistical multiplexer with priority control. Asynchronous data channels can be transmitted in "guaranteed" or "best effort" modes, to guarantee optimum utilization of available transmission capacity. The priority control ensures reliable transmission of the most important asynchronous and synchronous data channels and voice channels even under poor transmission conditions. Naturally, the vMUX is integrated in the management system of PowerLink, and is perfectly equipped for the power line communication requirements of the future with extended options for transmitting digital voice and data signals.

Features	Digital PLC system	Analog PLC system
Universally applicable in analog, digital, or mixed operation	■	■
Frequency range 24 kHz – 1,000 kHz	■	■
Bandwidth selectable 2 kHz – 32 kHz	■	■
Data rate up to 320 Kbps @ 32 kHz	■	
Transmission power 20/50/100 W in PowerLink 100, or 20/50 W in PowerLink 50, fine adjustment through software	■	■
Operation with or without frequency band spacing with automatic cross talk canceller	■	■
Digital interface		
Synchronous X.21 (max. 2 channels)	■	
Asynchronous RS 232 (max. 8 channels)	■	
TCP/IP (1 x electrical, 1 x optical for user data; 1 x electrical for service)	■	
E1 (2 Mbps) for voice compression	■	
G703.1 (64 Kbps)	■	
Analog interface		
VF (VFM, VFO, VFS), max. 8 channels for voice, data and protection	■	■
Asynchronous RS232 (max. 4) via FSK		■
Miscellaneous		
Adaptive dynamic data rate adjustment	■	
TCP/IP layer 2 bridge	■	
Integrated versatile multiplexer for voice and data	■	
Max. 5 compressed voice channels via VF interface	■	
Max. 8 voice channels via E1 interface	■	
StationLink bus for the cross-connection of max. 4 PLC transmission routes (data and compressed voice; compressed voice routed without compression on repeater)	■	
Reverse FSK analog RTU / modem data via dPLC (2 x)	■	
Protection signal transmission system SWT 3000		
Integration of two systems in PowerLink 100; one in PowerLink 50	■	■
Remote operation via cable or fiber-optic cable identical to the integrated version	■	■
Single-purpose or multi-purpose / alternate multi-purpose mode	■	■
Element manager, based on a graphical user interface for the control and monitoring of PLC and teleprotection systems	■	■
Command interface binary and in accordance with IEC 61850	■	■
Remote access to PowerLink		
Via TCP/IP connection	■	■
Via in-band service channel	■	■
SNMP compatibility for integrating NMS	■	■
Event memory with time stamp	■	■
Simple feature upgrade through software	■	■

Table 8.1-1: Overview of features

Voice compression

Voice compression is indispensable for the efficient utilization of networks. Naturally, quality must not suffer, which is why PowerLink offers comprehensive options for adapting the data rate to individual requirements. PowerLink offers different compression stages between 5.3 and 8 kbit/s. To prevent any impairment of voice quality, the compressed voice band is routed transparently to PowerLink stations connected in line, without any further compression or decompression.

Protection signal transmission system SWT 3000

Two independent SWT 3000 systems can be integrated into PowerLink 100; one in PowerLink 50. Every integrated teleprotection system can transmit up to four protection commands. The command interface type for distance protection devices can be either standard binary or compliant with IEC 61850. Even a combination of both command interface types is supported. For highest availability, an alternate transmission path via a digital communication link can be connected in PowerLink. SWT 3000 systems are also fully integrated into the user interface of the PowerLink administration tool.

One administration system for all applications

PowerLink not only simplifies communications, but also makes communications cost-efficient. The PowerSys software administers all integrated applications of PowerLink under a standard user interface. This ensures higher operating security while cutting training times and costs to the minimum.

Integration of PowerLink in network management systems via SNMP

PowerLink systems can also be integrated in higher level management systems via the IP access by means of the SNMP protocol (Simple Network Management Protocol). System and network state data are transferred, for example, to an alarm, inventory or performance management system.

8.1.3 SWT 3000 – teleprotection for high-voltage lines

The SWT 3000 (fig. 8.1-5) is an highly secure and reliable system for transmitting time-critical distance protection commands via analog and digital transmission channels (fig. 8.1-6). This enables faults in the high-voltage grid to be isolated selectively as quickly as possible. The SWT 3000 system can be integrated in the PowerLink system or be operated as a stand-alone system.

Fig. 8.1-5: SWT 3000 teleprotection system

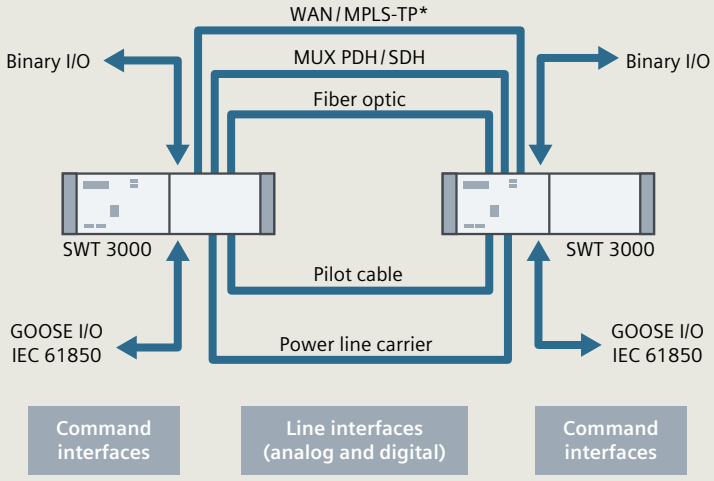

Application

Transmission of protection signals to quickly identify, isolate and resolve problems in the transmission network of a utility

Advantages

Keeps downtimes to an absolute minimum

Supports IEC 61850 interfaces as well as conventional binary interfaces

Flexible integration into various customer communication networks

Path protection via two different transmission routes for increased reliability

* not applicable in combination with IEC 61850

Fig. 8.1-6: SWT 3000 teleprotection system – wide range of Command and Line interface

Security, reliability and speed of protection signal transmission is one of the central factors in the operation of high-voltage grids. For maximum operating reliability, SWT 3000 can be configured with two separately fed power supplies. If possible, protection signals should be transmitted over two alternative communication paths to safeguard maximum transmission security. Fig. 8.1-7 shows the different analog and digital transmission paths between SWT 3000 systems.

The SWT 3000 also demonstrates its high degree of flexibility when existing substations are migrated to protection devices via the IEC 61850 communication standard. The SWT 3000 has all necessary command interfaces – both as binary interfaces and as GOOSE. This always keeps investment costs economically manageable, because the substations can be updated step by step for a new network age.

Transmission paths

1 Pilot cable connections
For operation via pilot cable, two SWT 3000 devices can be linked directly through the analog interfaces (CLE).

2 Power line carrier connections
The analog link (CLE) between two SWT 3000 devices can also be a PLC link. Depending on device configuration, SWT 3000 can be used with PowerLink in alternate multipurpose, simultaneous multipurpose, or single-purpose mode.

3 12 Fiber-optic connections between SWT 3000 and PowerLink
A short-distance connection between an SWT 3000 and Siemens' PowerLink PLC terminal can be realized via an integrated fiber-optic modem. In this case, an SWT 3000 stand-alone system provides the same advanced functionality as the version integrated into PowerLink. Each PowerLink can be connected to two SWT 3000 devices via fiber optics.

5 6 7 9 11 SWT 3000 digital connections
The digital interface (DLE) permits protection signals to be transmitted over a PDH or SDH network.

4 7 10 SWT 3000 Ethernet connections
The ETH line interface (EN 100) supports transmission via packet based networks.

6 5 7 8 10 11 12 14 Alternative transmission routes
SWT 3000 enables transmission of protection signals via two different routes. Both routes are constantly transmitting. In the event that one route fails, the second route still bears the signal.

6 8 Direct fiber-optic connection without repeater
SWT 3000 protection signaling incorporates an internal fiber-optic modem for long-distance transmission. The maximum distance between two SWT 3000 devices is 150 kilometers.

8 9 12 Fiber-optic connection between SWT 3000 and a multiplexer
A short-distance connection of up to two kilometers between SWT 3000 and a multiplexer can be realized via the integrated fiber-optic modem according to IEEE C37.94. Alternately, the multiplexer is connected via FOBox, converting the optical signal to an electrical signal in case the MUX does not support C37.94.

13 14 SWT 3000 integration into the PowerLink – PLC system
The SWT 3000 system can be integrated into the PowerLink equipment. Either the analog interface or a combination of the analog and the digital interfaces can be used.

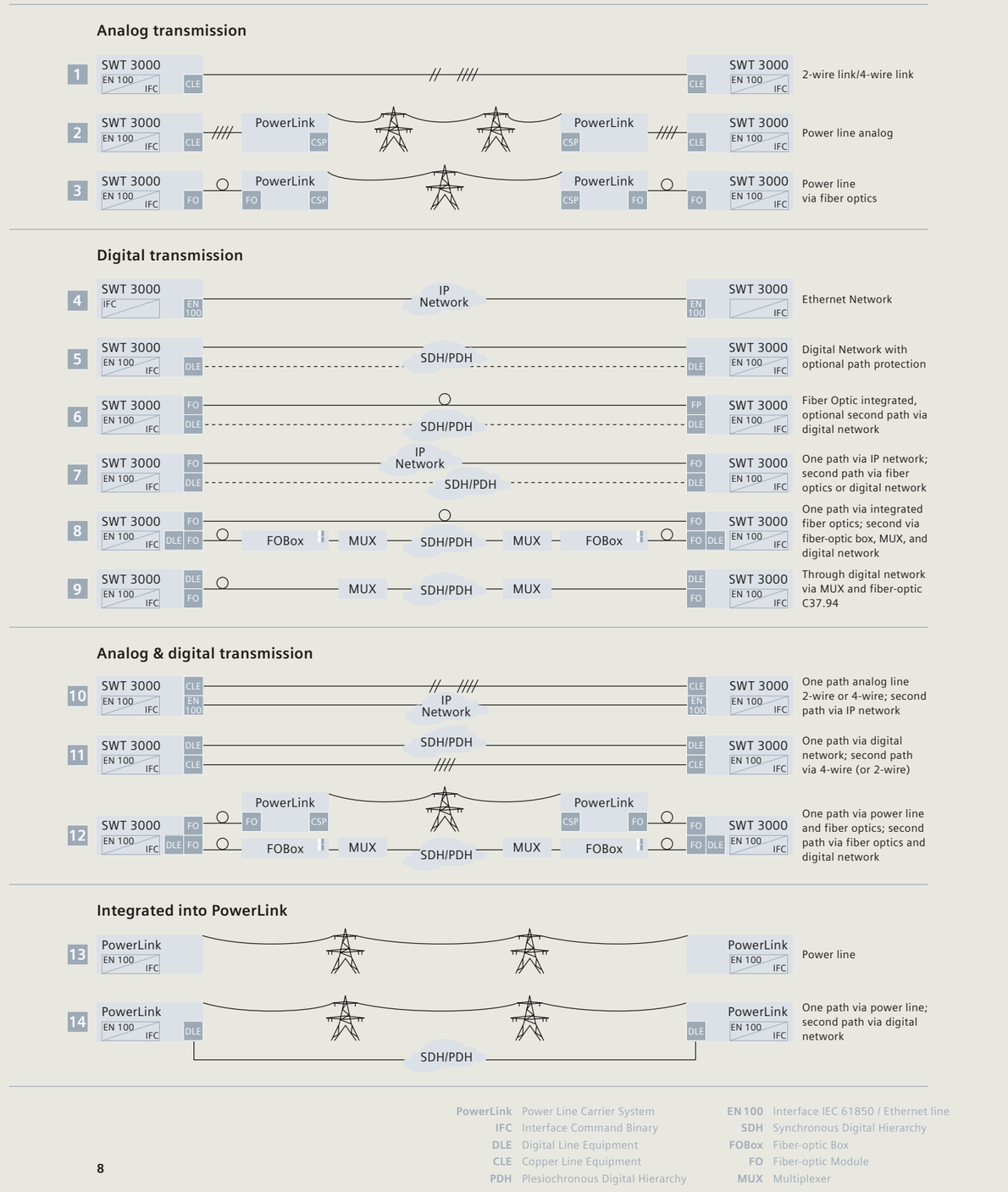

Fig. 8.1-7: SWT 3000 transmission paths

8.1.4 Coupling unit AKE 100

The PLC terminals are connected to the power line via coupling capacitors, or via capacitive voltage transformers and the coupling unit. In order to prevent the PLC currents from flowing to the power switchgear or in other undesired directions (e.g., tapped lines), traps (coils) are used, which are rated for the operating and short-circuit currents of the power installation and involve no significant loss for the power distribution system.

The AKE 100 coupling unit from Siemens described here, together with a high-voltage coupling capacitor, forms a high-pass filter for the required carrier frequencies, whose lower cut-off frequency is determined by the rating of the coupling capacitor and the chosen matching ratio.

The AKE 100 coupling unit is supplied in two versions and is used for:

- Phase-to-earth coupling to overhead power lines
- Phase-to-phase coupling to overhead power lines
- Phase-to-earth coupling to power cables
- Phase-to-phase coupling to power cables
- Intersystem coupling with two phase-to-earth coupling units.

The coupling units for phase-to-phase coupling are adaptable for use as phase to-earth coupling units. The versions for phase-to-earth coupling can be retrofitted for phase-to-phase coupling, or can as well be used for intersystem coupling.

8.1.5 Voice communication with PowerLink

The TCP/IP protocol is gaining increasing acceptance in the voice communication area. However, considerably higher bandwidth requirements must be taken into account in network planning with VoIP compared with analog voice links. Table 8.1-2 shows the bandwidth requirement for a voice link via TCP/IP as a function of the codec used for voice compression.

Codec	Net bit rate	Gross bit rate
G.711	64 kbit/s	87.2 kbit/s
G.726	32 kbit/s	55.2 kbit/s
G.728	16 kbit/s	31.5 kbit/s
G.729	8 kbit/s	31.2 kbit/s
G.723.1	5.3 kbit/s	20.8 kbit/s

Table 8.1-2: Bandwidth requirement for VoIP

In the office area today, the LAN infrastructure is usually sufficiently generously dimensioned to make VoIP communication possible without any restrictions. The situation is distinctly different if it is necessary to connect distant substations to the utility's voice network. If these locations are not integrated in the corporate backbone network, power line carrier connections must be installed. Fig. 8.1-8 shows the basic alternatives for voice communication via PowerLink.

Analog connection

The telephone system is connected to the PowerLink via the analog E&M interface. A telephone system or an individual analog telephone can also participate in a PowerLink system at a different location. The bandwidth requirement can be reduced to about 6 kbit/s (including overhead) per voice link by means of voice compression in the PowerLink.

Digital connection

With digital connection, the telephone system is connected to PowerLink via the digital E1 interface. Because of the restricted bandwidth, up to 8 of the 30 voice channels (Fractional E1) can be used. This alternative is only suitable for communication between telephone systems. Individual telephones must be connected locally to the particular telephone system. The bandwidth requirement is made up of the user data per voice channel (e.g., 5.3 kbit/s) and the D-channel overhead for the entire E1 link (approximately 2.4 kbits/s), (i.e., for a voice channel less than 10 kbit/s).

In the case of series connected locations with both analog and digital connection, multiple compression / decompression of the voice channel is prevented by the unique PowerLink function "StationLink".

TCP/IP connection

The telephone system, voice terminals and the PowerLink system are connected directly to the TCP/IP network. Voice communication is conducted directly between the terminals. Only control information is transmitted to the telephone system. Use of the TCP/IP protocol results in a broadband requirement per voice channel of at least 21 kbit/s (5.3 kbit/s voice plus TCP/IP overhead).

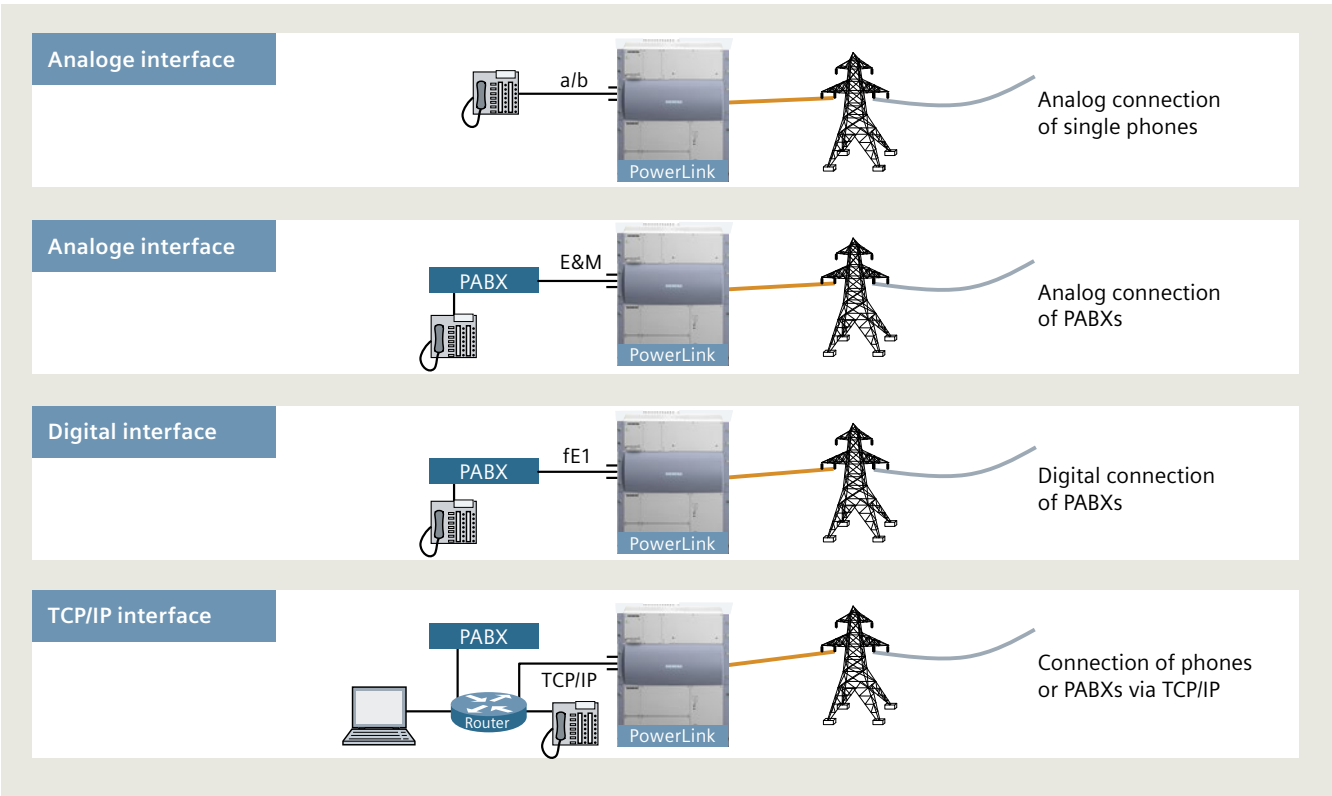

Fig. 8.1-8: Basic options of voice communication via PowerLink

8.1.6 Connection Master

Voice, data, protection – the communication platform for mission-critical applications in transmission networks of utilities
The pace of innovation in telecommunications is increasing at breathtaking speed. What is necessary to keep utilities at the leading edge in this area? How cansystem operators benefit from new, IP-based services – while protecting existing SDH and PDH interfaces in running systems?

One platform – three proven technologies
Connection Master is Siemens' multiservice access communication platform for utilities and industrial applications. Complying with SDH, PDH (TDM), and Ethernet (over SDH), it supports voice and data legacy interfaces transported via NG SDH (fig. 8.1-9).

With its performance capabilities, Connection Master can handle any type of application including Plain Old Telephone Service (POTS) and Supervisory Control and Data Acquisition (SCADA). Very low latency enables reliable support of time-critical applications such as teleprotection.

Easy migration of existing access equipment
To protect investments, Connection Master is designed to be backward compatible with the existing network of the utility – for example, with FMX2 product families. The platform is available along with Network Management Systems (NMS) that support legacy equipment, too. This allows for a flexible migration to the Connection Master.

System overview covering today's and tomorrow's needs

Trunk interfaces
- SDH STM-1/4/16.

Access interfaces
- Legacy interfaces e.g., FXS, FXO, E&M, X21, V35, ...
- Ethernet interface.

Characteristics
- 64 kbit/s cross-connection functionality for legacy TDM services (voice and data) including advanced path protection
- Power-over-Ethernet functionality
- High-capacity TDM and Ethernet-based tributary units
- High availability via redundant critical modules
- Very short delay times in protection signal transmission.

Network administration systems

Multiservice Manager
The Multiservice Manager is a Local Craft Terminal (LCT) Network Management System for individual nodes that works locally or remotely for small networks via a Windows-based GUI or a Command Line Interface (CLI). The Siemens Multiservice Manager allows the user to access all functions of Connection Master.

Network Management System (NMS)
The NMS is designed for bigger networks and offers all features to efficiently manage and maintain these networks. Fault management, configuration possibilities, inventory management, and other functionalities offer tools to ensure that the network and the services run as expected. End-to-end circuit provisioning of 64 kbps is a good example of how efficient NMS is designed to be.

Connection Master and SWT 3000
Using an SNMP connection between Connection Master nodes and teleprotection unit SWT 3000, both the telecom equipment and alarms from SWT 3000 are visible in the two management systems.

Fig. 8.1-9: Product family

Benefits at a glance:

- Utility-optimized communication equipment ensures high reliability of the energy network.
- Long-term availability of the communication system
- Investment protection for legacy voice and data interfaces
- Support of packet-based applications guarantees future safety of the system.

Application examples

Multiservice solution
CM offers a multiplexer, a cross-connect, and a transport device – all in one node.

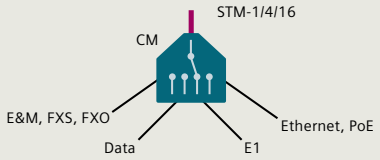

Easy expansion of legacy networks
When CM is placed in the middle of an existing legacy network, typically the capacity of the network increases and connections continue working e2e.

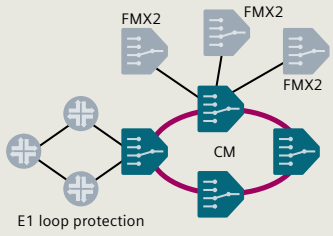

Flexible integration of teleprotection systems (e.g., SWT 3000)
Teleprotection signals can be transmitted via two different transmission routes, either via digital interfaces (G.703, X.21) or the optical interface C37.94.

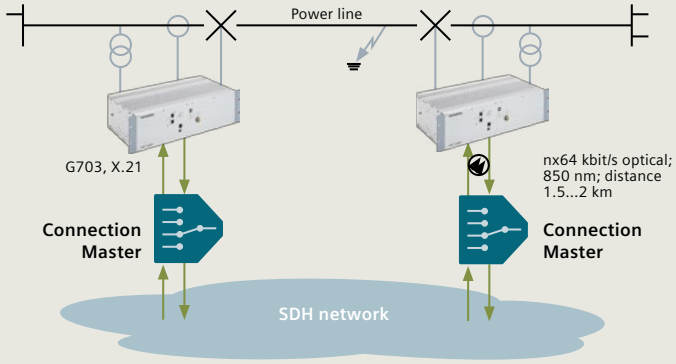

Smooth evolution
CM as a fully standardized NG SDH system enables interoperability with existing SDH equipment. This supports the smooth integration into packet-based networks.

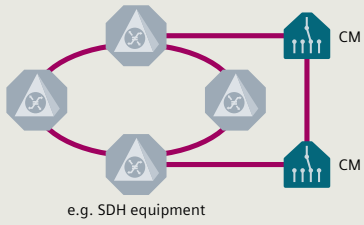

Point-to-multipoint functionality optimizes usage of network capacity
The P2MP reduces the amount of hardware at the central site, which saves HW investment.

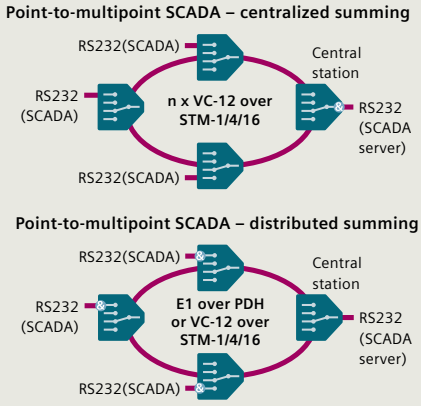

Fig. 8.1-10: Application examples

8.2 Control center communication

Redundant control center communication

A control center for power supply systems such as Spectrum Power (fig. 8.2-1) is typically configured with full redundancy to achieve high availability. This includes communications. Depending on the system operator's requirements, various mechanisms are supported to achieve this goal for communication. This includes:

- Automatic failover of communication servers
- Configurable load sharing between two or more communication servers
- Automatic failover of communication lines
- Supervision of standby communication line, including telegram buffering.

Process communication to substations and power plants
Process communication to the substations and to Remote Terminal Units (RTUs), e.g., in power plants or power supply systems, is implemented via serial interfaces or by means of TCP/IP-based network communication with a Communication Front End. The Communication Front End includes data-preprocessing functionality like:

- Routine for data reduction, e.g., old / new comparison, threshold check
- Data conversion
- Scaling and smoothing of measured values
- Integrity checks for incoming data
- Data completeness checks and cycle monitoring
- Statistical acquisition of the data traffic with the RTU.

All kinds of different protocols are used for historical reasons. However, as a result of international standardization there is also a market trend here towards standardized protocols like IEC 60870-5-104, DNP3i protocol or IEC-61850.

The more recent protocol standards all rely on TCP/IP-based communication. However, it must be possible today and in the near future to continue connecting conventional telecontrol devices (already installed RTUs) via serial interfaces.

Interface for industry automation / third-party applications

OPC (OLE for process control) and OPC UA provide a group of defined interfaces. OPC in general enables the overall data exchange between automation and control applications, field systems / field devices, as well as business and office applications.

OPC is based on OLE / COM and DCOM technology. OPC UA (Unified Architecture) is a continuation and further innovation of OPC. OPC UA is based on native TCP/IP and is available for multiple operating system platforms, including embedded devices.

Communication between control centers

The communication between control centers is provided via the communication protocols ICCP or ELCOM, and is based on TCP/IP.

The Inter-Control Center Communications Protocol (ICCP) is an open and standardized protocol based on IEC 60870-6 and Telecontrol Application Service Element Two (TASE.2).

The exchanged data is primarily real-time system information like analog values, digital values and accumulator values, along with supervisory control commands.

Remote workstations / office communication

Remote workstations can communicate with the control center via the office LAN or an Internet connection. System and data integrity has to be ensured by the system security configuration for

- Protection against external attacks
- Protection against unauthorized usage
- Protection against data loss.

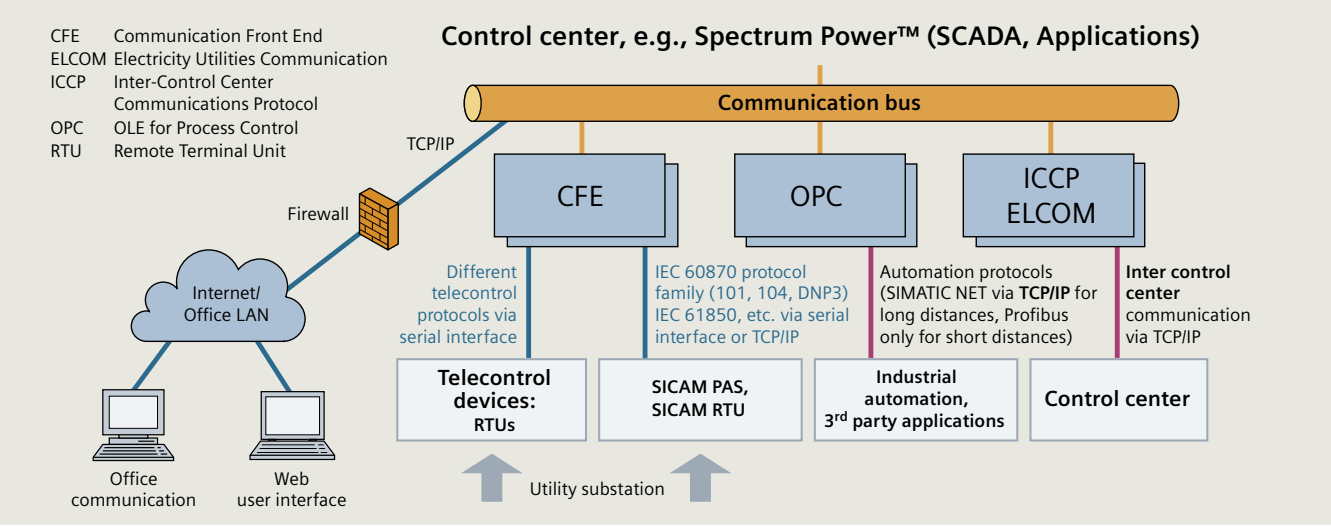

Fig. 8.2-1: Typical communication interfaces and communication partners of a control center using the example of Spectrum Power™

8.3 Solutions for distribution grids (backhaul / access communication)

8.3.1 Introduction

In the past, electricity was mainly produced by bulk generation at central locations, and distributed to consumers via the distribution systems. Energy demand peaks (e.g., at midday) were well known and balanced out by reserve capacity of central power plants. It was therefore usually not necessary to specially control the lower-level distribution networks, or even to integrate the consumers into the grid monitoring system.

Ever since renewable energy has been significantly expanded, electricity is being fed into both the medium-voltage and low-voltage systems, depending on changing external conditions (e.g., weather, time of day, etc.). These fluctuating energy resources can severely impair the stability of the distribution grids.

Buildings account for 40 % of the world's energy consumption and 20 % of total CO_2 emissions. Therefore, smart buildings also play a central role in the Smart Grid as they provide a huge potential for energy efficiency. Actively influencing their consumption and generation, smart buildings support the system stability and allow generators to consider other options before adding new generation facilities.

One of the key challenges of a Smart Grid therefore is quickly balancing out the energy supply and energy consumption in the distribution system (fig. 8.3-1).

A prerequisite for implementing a solution for this demand is monitoring and managing as many components of a power supply system as possible all the way to the consumer. The basis for this is a reliable communication infrastructure. For medium voltage, at least the following system components must be integrated into a Smart Grid and managed:

- The key ring-main units
- All large distributed producers (solar / wind farms, biogas / hydroelectric power plants, etc.)
- Large buildings, campuses, refrigerated warehouses, etc.

For low voltage, primarily households and small producers of renewable energy are involved.

With respect to their role in the power supply system, consumers can be divided into two groups:

- "Standard consumers", who have smart meters and optimize their electricity costs via ongoing price signals depending on supply and demand
- "Prosumers" (prosumer = producer + consumer), who can feed surplus energy into the power grid – such as solar power or energy generated by combined heat and power systems (CHP); many can also intermediately store energy using possibilities such as night storage heaters or e-cars.

While the communication requirements for standard consumers are concentrated on smart metering including price signals, time-critical control signals and power quality data must also be transmitted for prosumers. Therefore, in addition to smart meters, prosumers have energy gateways, which process and forward these control signals accordingly.

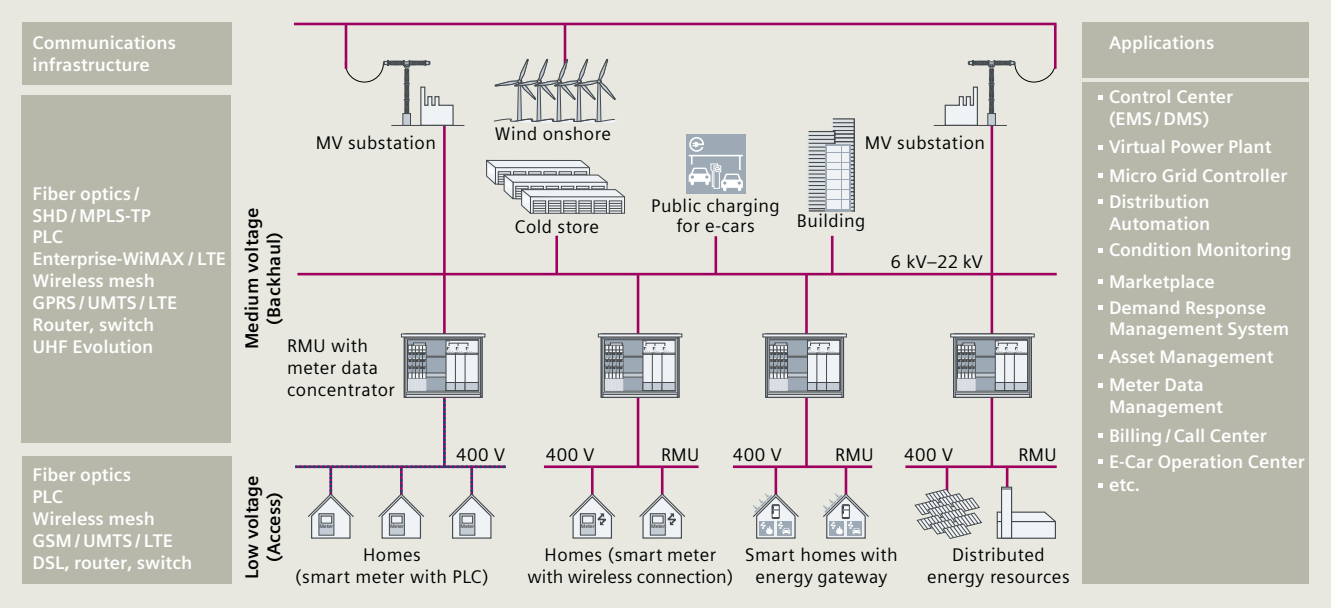

Fig. 8.3-1: Typical power distribution network integrating ring-main units, consumers, prosumers, distributed energy resources, etc.

The young history of Smart Grids has already shown that utilities do not implement it as a whole from the scratch. They usually start with smart metering projects with later extensions of Smart Grid applications.

Already with the first roll-out, the design of the communication infrastructure has to consider the growing requirements for these extensions. After a large deployment of metering infrastructure in the first step, it is not acceptable to replace the communication network a few years later because the requirements for the next subsets of Smart Grid applications cannot be met anymore.

Communications infrastructures for all conditions

The communication infrastructure in the medium-voltage and low-voltage distribution systems is usually heterogeneous, and the suitable technologies depend to a large extent on the local topology (large city, rural region, distances, etc.). It must therefore be specifically tailored for each customer.

In general, the following communication technologies are available:

- Fiber-optic or copper communication cables are the best option, if present
- Power line carrier systems for medium-voltage and low-voltage networks
- Setup of own private wireless networks (e.g., wireless mesh, private Enterprise-WiMAX / LTE, or UHF Evolution), when spectrum is available at reasonable prices or local regulations allow for it.
- Public wireless networks, depending on the installation for narrowband communication in the kbps range (e.g., GPRS), or in the Mbps range (e.g., LTE). Attractive machine-to-machine (M2M) data tariffs and robust communication in case of power outages are key ingredients to make this communication channel a viable option.

Depending on the applications being installed inside the RMU, an Ethernet switch / router might be needed in order to concentrate the flow of communications. These data concentrators can be implemented as customized solutions or integrated, for example, in the RTU (remote terminal unit). To meet these requirements, Siemens offers a full range of all above-mentioned communication technologies including rugged switches and routers that comply with energy industry standards.

8.3.2 Communication infrastructures for backhaul and access networks

Optical fibers

The best choice for all communication needs
Optical fibers is the best transmission medium for medium-voltage and low-voltage applications because it is robust and not susceptible to electromagnetic disturbances or capacity constraints. That is why system operators who choose this technology will be well prepared when their communication needs multiply in the future.

Fig. 8.3-2 shows the typical deployment of a fiber-optic infrastructure in distribution networks.

Fiber-optic cables are laid underground to connect individual substations. This work is associated with heavy civil works, and therefore with great expense. However, when new power cables are installed, the cost-benefit analysis paints a clear picture. Fiber-optic cables should generally be the first choice in this case.

Benefits in detail

- At the core of a variety of communication systems, from passive optical networks (PON) to Ethernet and SDH
- Durable, insusceptible to electromagnetic disturbances
- Practically unlimited transmission capacity.

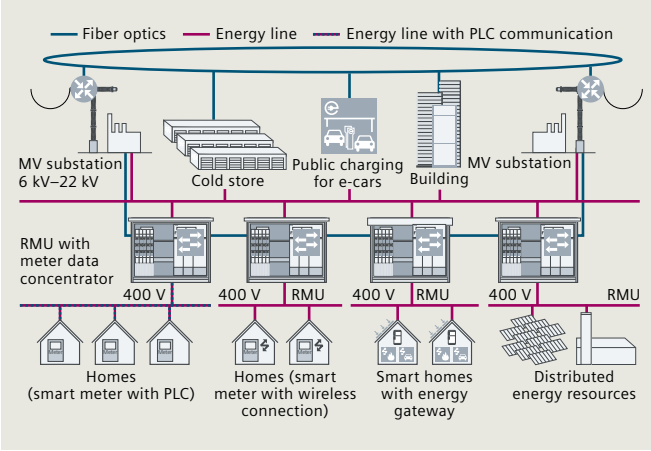

Fig. 8.3-2: Fiber-optic infrastructure for distribution network

Medium-voltage power line carrier solutions

Standards-based power line carrier solutions provide an attractive communication channel for all applications in medium-voltage and low-voltage Smart Grid scenarios. They use the utility-owned infrastructure in the distribution network, and provide a reliable and affordable communications channel. Therefore, PLC solutions are especially useful for connecting elements in grids, where no other reliable communication channel is available. They transform the DSOs assets into a highly capable Smart Grid communication infrastructure. With its throughput, low latency and high reliability, PLC solutions serve for distribution automation applications as well as for backhauling data from metering applications in the medium-voltage grid.

Fig. 8.3-3 shows the typical deployment of power line carrier solutions in distribution networks.

As with every communication technology, the transmission range and bandwidth provided by the PLC solution depends on the quality of the used transmission medium. In case of the transmission over power lines, type and age of the power cable as well as the number of joints have an impact on the achievable results. Consequently, a PLC network needs to be engineered and planned correctly to provide maximum performance.

Benefits of power line communication solutions:

- They transform the utility-owned infrastructure into a highly capable communication network.
- They are especially useful for connecting all elements in the grid where there are no other reliable communications media available.
- They provide a communication solution for all MV power grids.

Enterprise-WiMAX / LTE

The main application area for private WiMAX / LTE systems, specifically tailored to the needs of enterprises in vertical markets, is backhauling of RMUs, data concentrators or Distributed Energy Resources (DER). Single prosumers could technically be served, but this is economically reasonable only in selected cases.

Fig. 8.3-4 shows the typical deployment of Enterprise-WiMAX / LTE solutions in distribution networks.

WiMAX (Worldwide Interoperability for Microwave Access) is a standards-based telecommunications protocol (IEEE 802.16 series) that provides both fixed and mobile broadband connectivity. The advanced point-to-multipoint technology is field-proven and deployed globally. In the past, certain manufacturers have evolved the system for the requirements of specific vertical markets such as oil and gas or power utilities. Differing from telecommunication-carrier-oriented systems, these implementations support special features such as asymmetric prioritization of uplink traffic, layer-2-based traffic (multicast / IEC 61850 GOOSE), redundancy options, as well as economic system scaling fitting also for smaller, privately owned regional or local networks.

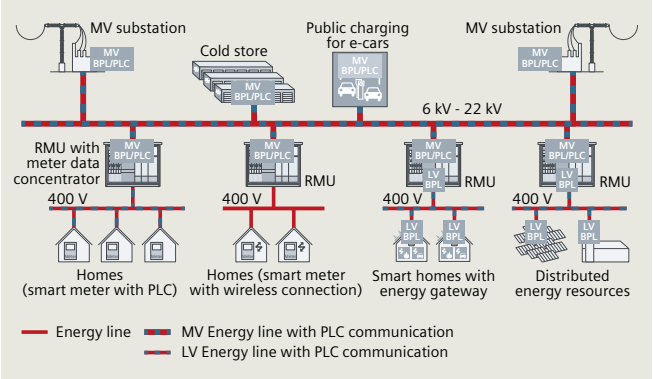

Fig. 8.3-3: Power line carrier communication solutions for distribution networks

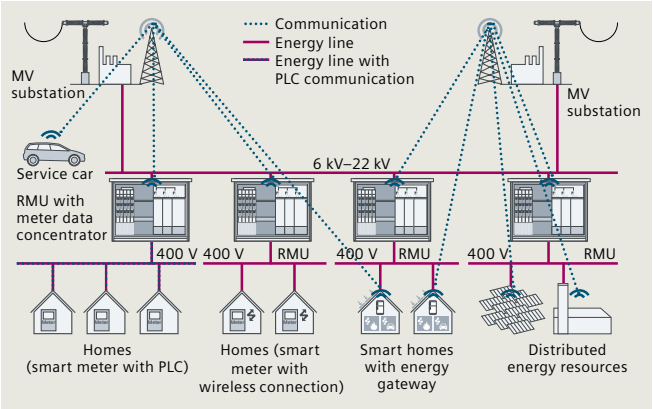

Fig. 8.3-4: Enterprise-WiMAX / LTE solution for distribution networks

Besides the application requirements, it is important to assess regional conditions like area topology and availability of radio spectrum. Professional radio network planning and network engineering are mandatory when setting up private broadband radio networks.

Basic technical data

- Data rates: up to 15 Mbps (uplink, 10 MHz channel, IEEE 802.16e system)
- Coverage:
  - up to 10 km in non-line-of-sight (e.g., urban) and
  - up to 30 km in line-of-sight conditions (with range extension)
- Implementations for radio spectrum in licensed or license-exempt frequency bands available.

Benefits

The WiMAX technology is field-proven, globally deployed, and continues to evolve. In parallel, manufacturers are also preparing enterprise-grade shapings of LTE-based networks leveraging economy-of-scale benefits from the widely spread deployment of this technology in the public cellular domain. Enterprise-WiMAX / LTE networks can be scaled from small to large, which allows for privately owned networks even on regional and local levels.

Wireless mesh

In general, wireless mesh networks are composed of cooperating radio nodes that are organized in a mesh topology (fig. 8.3-5). The link communication technology from one hop to another can be standardized (e.g., IEEE 802.11 series [WiFi] or IEEE 802.15.4 [LoWPAN, Low-rate Wireless Personal Area Network]) or proprietary (e.g., FHSS, OFDM technologies). The mesh protocols and corresponding forwarding algorithms are on the other hand still predominantly proprietary. Standardization efforts in this area (e.g., 6LoWPAN protocol suite / Zigbee-NAN) are currently still ongoing. Thanks to their mesh properties along with self-setup and self-healing mechanisms, mesh networks inherently offer ease of operation and redundancy for fixed applications. The system performance can be characterized by the hops' throughput capacity, the average reach of a hop-to-hop link, and the max. number of hops on a single path.

Detailed requirements as well as specific regional conditions must be carefully assessed in order to select the best-suited technology.

There are two major categories of wireless mesh networks:

Broadband wireless mesh for RMU / DER backhaul

Broadband wireless mesh systems have sufficient transport capacity to backhaul a high amount of data, that is to say aggregated data of various RMUs / DER plants, with multiple RTU devices or data concentrators / access gateways.

Basic technical data

- Maximum throughput (gateway capacity): ~ 20 Mbps (shared among the nodes connected to the gateway)
- Coverage: hop-to-hop reach 300 m ~ 10 km depending on system, frequency band and applicable power limit; meshing among up to 10 – 20 hops per path depending on the deployed system
- Radio spectrum primarily in license-exempt frequency bands, e.g., 5.8 GHz.

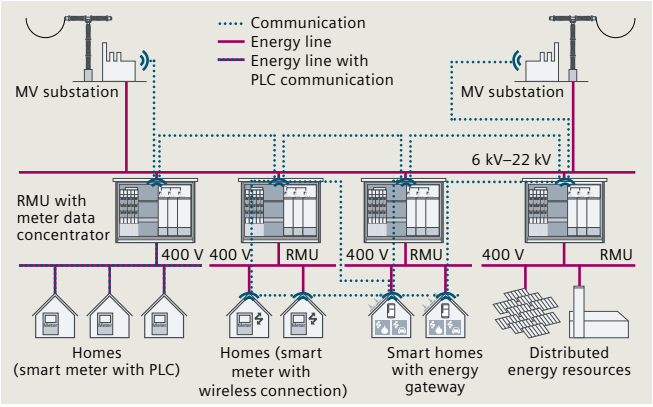

Fig. 8.3-5: Wireless mesh network

Narrowband radio frequency (RF) mesh for access / metering

The term "RF mesh system" is used to denominate narrowband wireless mesh technologies. Their capacity suffices to connect individual devices with moderate data transmission requirements, such as meters, grid sensors, measuring transformers, etc. The single RF mesh nodes communicate via each other towards an access gateway, which serves as take-out point into other WAN / backhaul communication networks.

Basic technical data

- Average throughput per node: 50 ~ 100 kbps
- Coverage: hop-to-hop reach 100m ~ 1 km depending on system, frequency band and applicable power limit; meshing among up to ~ 10 hops per path depending on the deployed system
- Radio spectrum primarily in license-exempt frequency bands, e.g., 900 MHz / 2.4 GHz.

Benefits

Thanks to their mesh properties along with self-setup and self-healing mechanisms, mesh networks inherently offer ease of operation and redundancy for fixed applications.

UHF evolution

The private wireless communication technologies covered in the previous sections (Enterprise-WiMAX / LTE and broadband wireless mesh) represent the preferred solutions for easily extensible multi-purpose wireless communication networks. However, for singular applications with just modest data rate requirements and end points spread over a large geographical area, an extensive private broadband wireless infrastructure can not always be implemented with a positive benefit-cost ratio. In these cases, the recently enhanced UHF radio systems (for the sake of distinction from classical UHF, here denominated as UHF evolution) constitute a better match for these kinds of requirements.

Fig. 8.3-6 shows the typical deployment of UHF evolution solutions in distribution networks.

Basic technical data

- Data rates: purpose-fit bandwidth ~ 100 kbps
- Coverage: up to dozens of kilometres
- Implementations in licensed radio spectrum, with narrow-band spectrum usually readily available to utilities.

Benefits

UHF evolution is ideally suited for applications with moderate bandwidth requirements (e.g., monitoring or automation via IEC 60870-5-104), even in case of just selective rollouts and including rurally distributed grid assets. The systems provide the merits of modern radio communication including automatic scalability between throughput and range. Due to the deployment of licensed spectrum and the flexibility of private network design, they are also appropriate for mission-critical applications.

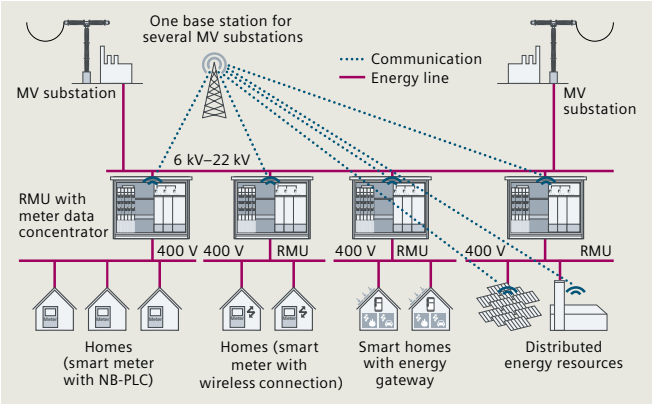

Fig. 8.3-6: UHF evolution solution

Public cellular networks

Extension of private communication networks

The main application areas for public mobile radio networks in the Smart Grid context are meter reading and energy grid monitoring functions (fig. 8.3-7).

In contrast to constructing dedicated private networks for Smart Grid communication, there is also the option of using existing cellular radio networks owned by communication service providers. These networks are standards-based, deployed worldwide, and continuously upgraded and expanded. Activities like acquiring spectrum licenses, building, operating and maintaining the network as well as assuring sufficient coverage and bandwidth on a nationwide scale are naturally managed by the communication service providers. Data rates normally available range from 50 kbps (GPRS), over 5 Mbps (HSPA), to over 20 Mbps (LTE). Attractive data tariffs and the availability and reliability of the network are key to use public cellular networks for Smart Grid applications.

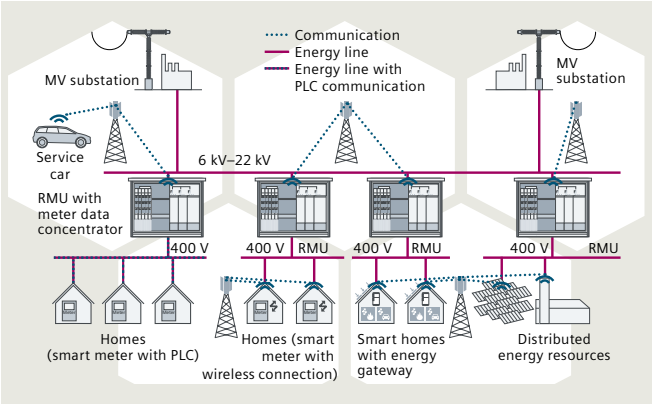

Fig. 8.3-7: Public cellular network

8.3.3 Smart metering turnkey solution

Fig 8.3-8 below gives an overview of components that may be found in smart metering turnkey solutions.

Smart metering turnkey solutions are built from the components shown below. The meters, the Advanced Metering Infrastructure (AMI) based on chosen communication technologies from the Access (NAN), Backhaul (FAN) and Backbone (WAN) areas, the Head-End System (HES), and the Meter Data Management (MDM) applications together with the utility's back office systems are used to provide the smart metering roles shown below:

- Meter-to-cash: Using the smart metering functions and data for billing purposes. This often also includes functions such as on-demand read, and remote connect / disconnect.
- Energy information feedback: Using the smart metering infrastructure to provide feedback to consumers on their usage – either via an in home display, a web portal or some other means.
- Distribution planning and operations integration: Using smart metering functions and data to enhance distribution planning and operations (e.g., load profile data or event data such as outages).
- Time-based rates: Using the smart metering data to support new rates based on time-of-use.
- Smart prepayment: Using the smart metering infrastructure to facilitate the introduction (or broaden the existing deployment) of prepayment.
- Demand Response (DR): Using the smart metering data to facilitate demand response communication and also determine customer behavior when DR events are called.
- Integration of Distributed Energy Resources (DER): Using smart metering infrastructure and data to facilitate the integration of DER control with DR.

In practice, at least two of the communications solutions for the Access (NAN), Backhaul (FAN) and Backbone (WAN) will be used based on customer preferences, the required smart metering functionality, the local geographic conditions, the bandwidth, and the performance and availability requirements. The NMS functions for the communications methods and the AMI interfaces of the HES also have to be calculated to meet the performance and management requirements of the AMI infrastructure.

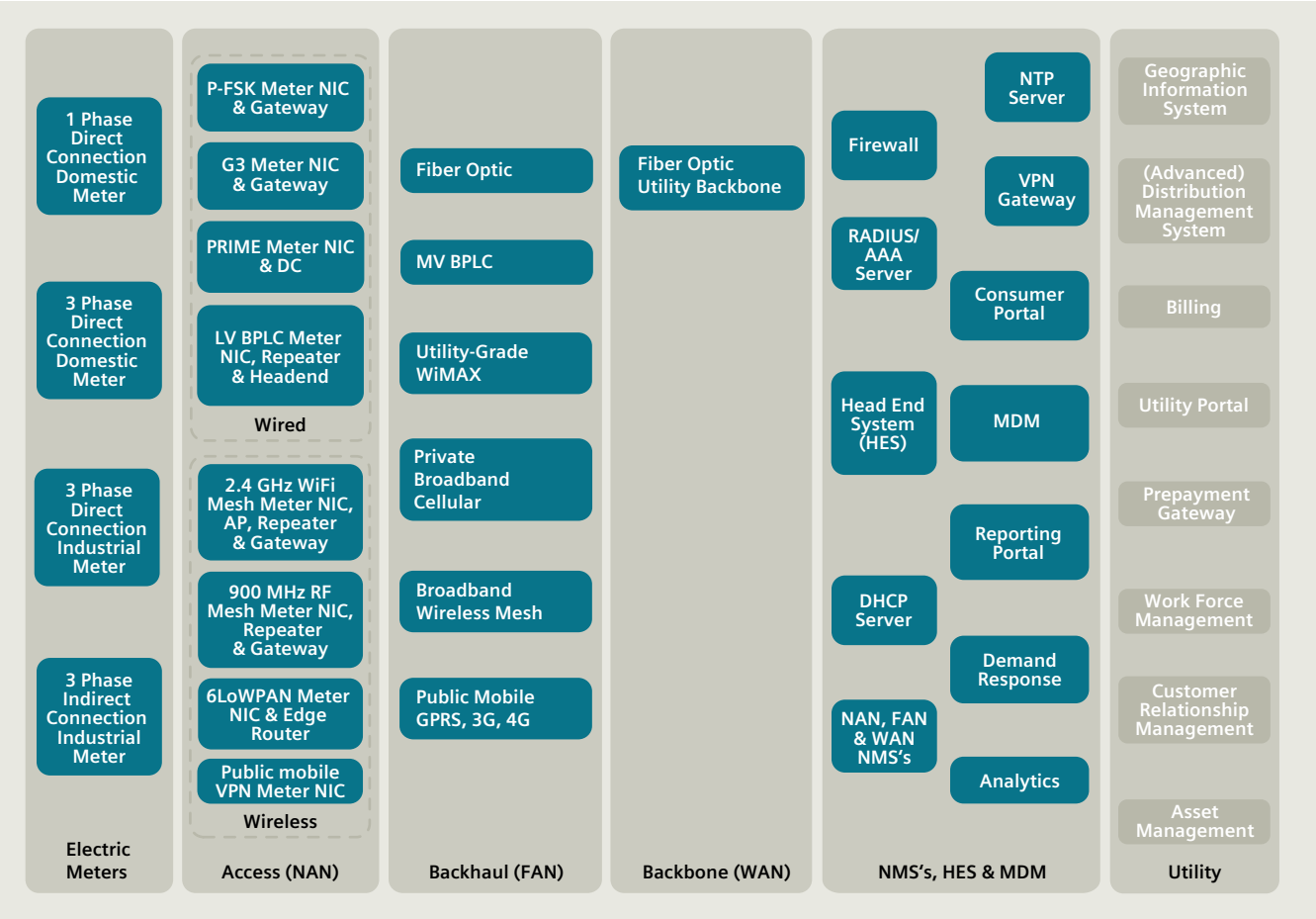

Fig. 8.3-8: Overview of smart metering turnkey solution components

9 Consulting and planning for power grids

9.1	**Introduction**	**520**
9.2	**Energy business advisory**	**522**
9.2.1	General	522
9.2.2	Methods and tools	523
9.2.3	Portfolio	524
9.3	**Power system consulting**	**527**
9.3.1	General	527
9.3.2	Portfolio	528
9.3.3	Typical use cases	529
9.4	**Software solutions**	**531**
9.4.1	PSS® product suite	531
9.4.2	SIGUARD® solutions	536

9.1 Introduction

Every society today is highly dependent on electricity. This dependency will continue to grow as business and private life become more and more "digital". At the same time, building, expanding, maintaining and operating our complex and widespread power supply systems has become increasingly demanding. For every power system worldwide, an individual mix of challenges manifests the various and often contradicting requirements:

- Sustainability and renewable energy
  One major trend worldwide is the strong move towards more sustainable power supply systems. This pushes the transformation of the power generation system towards renewable energy sources. Due to the intermittent characteristic of most renewable energy sources, this adds a second power generation system based on renewable energy resources to the conventional one.
- Distributed energy systems
  In recent years, there has been a strong push for power generation from renewable energy sources, which is reflected in the installation of small-scale generators like roof-top PV installations or individual wind turbine generators. As a result, and being a trend on its own, the relevance of both the distribution level in general and of distributed energy systems within the distribution level (including microgrids) is strongly increasing. A higher share of generation is connected to the distribution level, and more and more functions and services are taken over by (parts of) the distribution level, such as load / generation balancing in distributed energy systems. Consequently, the characteristics of distribution and its role within the whole power supply system are changing and the transmission system must also react and adapt to such changes accordingly.
- Regulation
  The topics of sustainability and distribution are explicitly addressed and, in most cases, strongly supported by regulation. The whole bandwidth of regulatory regimes is applied in different regions worldwide, and sometimes even within one country. New models come up frequently, and may be implemented quickly. With the increasing dynamics and profoundness of regulatory changes, this challenge has become key to business models in the power sector and for technical implementations.
- Electrification
  Electrification is highly relevant in two different ways. First, it should be kept in mind that, in many places worldwide, the most urgent challenge in the development of power systems is simply bringing more power to more people. This does not necessarily mean that such power systems will develop similarly to those in today's highly industrialized countries. All of the above challenges are well-known and well-understood worldwide, and may call for very different solutions to this long-standing need for basic electrification.
  Second, there are many power systems with high capacities for power generation from renewable energy sources. These systems may be faced with an abundance of energy being generated, being left in a situation where more energy is being produced than needed to meet the typical demand. Aside from the immediate impacts this may have on the energy market schemes, where electricity prices may at times even become negative, there is a need for storage and for new ways to use electricity. Power-to-heat, power-to-gas, power-to-chemicals, etc. ("power-to-x") are just some catchwords addressing these trends. Eventually, this development itself will have major impacts on power markets and power systems.
- Security
  Given our dependency on electricity, the topic of security in its many different facets is drawing increased attention. Security of the power system traditionally focused on adequate power generation capacity and reserves, as well as on appropriately designed and stable transmission networks. However, the sophisticated in the power system calls for focusing our security related efforts on areas such as cyber security or critical infrastructure, resiliency frameworks, evaluation of risks from natural phenomena and third-party threats. Additionally there are concerns about ageing assets and about how the transformation of the existing power supply systems in general can keep up new and changing technical and regulatory requirements and challenges.

What does this all mean for the planning, operation and development of power systems? Starting from the very top level, all relevant market players, such as "traditional" utilities, new players like investors, IPPs, owners and operators of distributed energy systems, must understand how their business models will be impacted by these trends and challenges. In several examples, traditional business models have been completely eliminated. It is also important to understand the link between the existing / new / changed business models and the real world, the individual assets, and their interaction in the system context. In general, power systems are pushed closer to operational limits in both the financial and the technical domains, which increases the risk for stranded investments, losses, disturbances and blackouts.

Rising complexity obviously calls for more dedicated and more sophisticated planning. It has become very important to be well prepared for upcoming changes. In power system planning, it is increasingly important to consider a holistic perspective. This includes a detailed description of relevant scenarios for system development, the definition of concrete objectives on strategic, business and technical levels, making use of new technologies and concepts, and a strict implementation of the derived programs and measures. All of this needs to be done with an appropriate level of detail in the short-term planning phase, guided by an overall long-term vision for the complete system.

Siemens PTI has built significant expertise in electric power systems over decades, and in literally thousands of successfully completed studies and projects. Actively engaging in the power community and leveraging the full potential of Siemens' technologies, products and methodologies, the scope of services offered by Siemens PTI is constantly expanding and always state of the art. This is demonstrated by the recent addition of Siemens PTI's strategic consulting competence to the overall consulting portfolio.

The worldwide distribution of projects and local expert teams in more than 15 countries ensure familiarity with both local and international standards and requirements. This forms a sound basis to independently and objectively address any issue in the strategic and technical development of power systems. Siemens PTI is ready to support the transformation into the "Utility of the Future", built on a "Grid of the Future".

9.2 Energy business advisory

9.2.1 General

Development of the 'Digital Grid' and diverse new market entrants are forcing the utility industry to innovate at a high speed. Drivers for this innovation are new technologies, volatility in energy markets never seen before and changes in regulation all over the world. The classic picture of consumers consuming energy generated in centralized generation plants, transmitted and distributed by specialized equipment, is under pressure due to the rise of renewable energy sources transforming consumers into so-called 'prosumers'. This implies that a significant amount of the traditional rules and properties of the electrical system need to be rethought.

Electric utilities find themselves in a situation where they need to significantly enhance the sophistication of their capabilities, or even create new capabilities to seize these trends as an opportunity instead of a threat (fig. 9.2-1).

To help our clients, Siemens has developed a knowledge model, in order to maximize the potential value creation of new technologies by putting these innovations into the context of business capabilities and the resulting impact on business models. This ultimately enables the connection between new technologies and business value to be measured at the top and bottom line (fig. 9.2-2).

The knowledge model supports clients in tailoring their vision, building their individual roadmap, transforming into their form of a 'Utility of the Future', and creating the business case for that transformation.

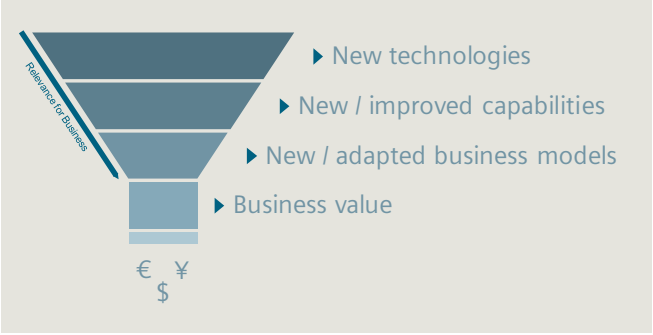

Fig. 9.2-2: Siemens knowledge model structure

Fig. 9.2-1: A fast changing environment is an opportunity

9.2.2 Methods and tools

Siemens Smart Grid Compass®

Systems and solutions at local electric distribution utilities are often commissioned with well-defined expectations, and are installed in order to address particular problems. However, when it comes to transition towards a Smart Grid, utilities face a profound paradigm shift. No single product or solution turns a legacy grid into a 'Smart Grid', or an organization into a 'Utility of the Future'. In the Smart Grid space, with its high complexity and massive interdependencies, focusing on a single product for a single problem does not often work well. Business cases focused on one problem or objective often become negative, and are not able to justify the required investments.

In today's paradigm, the process of finding and leveraging synergies between different technology investments has become a key success factor for Smart Grid implementation programs. Although a plethora of technologies and products are available in the market, their complex features, described in dense jargon, make it unclear how synergies can be realized in real-world application or in a sequential implementation program.

To address these challenges, Siemens has developed the Smart Grid Compass® approach.

The approach is comprised of four modular phases: orientation, destination, routing and navigation, with a view on six functional domains of a distribution utility's business as follows:

- Smart network operations
- Smart customer service
- Smart asset and workforce management
- Smart energy
- Smart organization
- Smart product portfolio management.

The first key goal of the Siemens Smart Grid Compass® is to support the internal alignment of the utility through alignment of objectives throughout the company, in order to create or strengthen a shared vision across departments and mobilize the entire organization around this unified vision.

The second key goal is to provide a structured set of programs and projects that will transform the utility into an organization capable of driving increased prosperity in its community. This community prosperity goal is what ties the actions of the transformation program to community energy planning initiatives, described next.

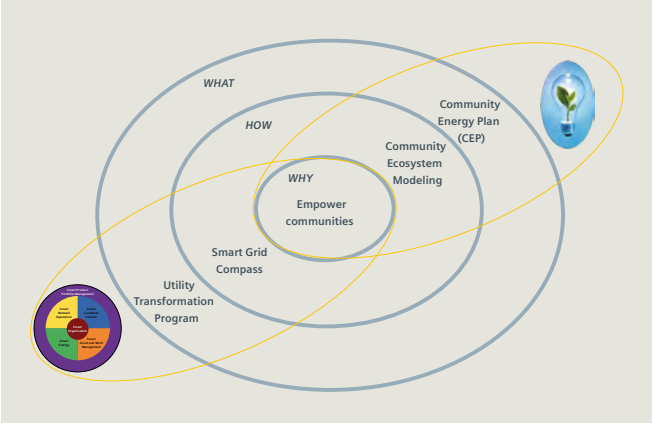

Fig. 9.2-3: Integrating utility transformation and community energy planning

Community energy planning

Community energy planning takes varying forms in various geographies, jurisdictions, and regulatory regimes. The goals of community energy plans are primarily to improve energy efficiency, reduce greenhouse gases, and drive local sustainable energy initiatives within the community. The intent is to quantify energy consumption in the community, and use this data to prioritize initiatives and efforts to achieve the stated energy goals and lead the community towards a defined energy vision. In the end, a sustainable set of business models for all involved parties needs to be defined.

Approaching these goals from a community point of view is intended to drive action in the form of energy generation and consumption related initiatives, but that potentially leaves many opportunities for enhancing community competitiveness unaddressed and untapped. Ensuring the local utility is at the table and that they are in the process of pursuing their own vision of a 'Utility of the Future' to support the community enables the utility to be at the forefront of community economic, social and environmental development.

The outcome of such a planning process is an integrated utility transformation program and a community energy plan that serves both the utility and the community to overcome the diffused benefits problem in a new and unique way, and ensures that the plans are actionable and fundable. The diffused benefits problem appears in situations when a potential action / investment is socially desired because the sum of benefits for all players outweighs required costs, but the investment is omitted because, for every single player, private benefits do not outweigh private costs. This challenge of widely distributed benefits among numerous players can be mastered through the use of cooperative business models, which can be identified using the Siemens approach.

1
2
3
4
5
6
7
8
9
10
11
12

9.2.3 Portfolio

The energy business advisory portfolio of five pillars that support clients on their transformation to a 'Utility of the Future'.

Infrastructure strategy and development

Technology advancements enable modern infrastructure driving economic, social and environmental value for a sustainable future. In this context, the following studies can be performed:

- Infrastructure strategy and feasibility assessments
  Siemens supports the development of utility strategies and performs comprehensive feasibility analyses of infrastructure and asset opportunities. The strategy assessments typically include establishment of technical and economic criteria, evaluation of candidate technologies, sizing and performance calculations, and preparation of capital and O&M cost estimates and project schedules. Siemens follows this with an economic project analysis that factors in regulatory, financial, and energy market conditions.
- Community energy plans
  Siemens approaches the community's energy plans from a community point of view, in order to drive action in the form of initiatives related to energy generation and consumption, addressing opportunities for enhancing the community's competitiveness in parallel. This ensures that the local utility is at the table, and that it supported in the process of pursuing their own vision of a 'Utility of the Future' to be at the forefront of economic, social and environmental development.
- Integrated infrastructure resource plans
  Traditional utility integrated resource plans (IRP) are market and generation driven, which is sufficient for a primarily centralized generation model. With the ongoing trend to decentralized energy resources, utility IRPs need to consider the transmission and distribution systems as well. Strong integration with our power grid consulting capabilities is key for long-term stability in the IRPs.
- Internet-of-Things (IoT) strategies
  Infrastructure will be highly influenced by the upcoming IoT technologies, especially in the context of smart communities. A solid understanding and a strategic view on the resulting opportunities provide significant revenue potential for utilities. Therefore, a thorough IoT strategy is essential for a ‘Utility of the Future’.

Business Transformation

New technologies enable optimized capabilities that lead to higher value business models. A solid understanding of the opportunities, combined with a realistic transformation program, will create the industry leaders of tomorrow.

- Utility of the future strategies
  What capabilities are important in the future and which are not? What are customers going to buy and who is developing the best value? The right answers to questions like these will guide utilities to become a 'Utility of the Future'.
- Business model transformation
  The strategy, comprehensive industry knowledge, and thorough analysis will guide the evolution of existing and the invention of new business models, both maximizing customer value and sustainability of the utility.
- Managed transition programs
  Establishing business models according to the strategy requires a solid program to build necessary capabilities at the right level of sophistication, and a managed transition to the target end state as a 'Utility of the Future'.
- Grid asset management concepts
  If aging assets meet a decline in load growth, they create a strong trigger to begin the transformation, starting with new and more sophisticated capabilities in asset management – built on advanced grid asset management concepts.

Market advisory and planning

Unbiased advice, coupled with seasoned expertise, is vitally important to business leaders responsible for guiding companies through today’s complex and often unpredictable economic environment. Adequate models, plans and strategies are necessary to enable customers to not only survive, but thrive in challenging markets.

- Integrated resource plans
  Siemens' integrated resource planning approach uses comprehensive stochastic or scenario-based assessments of uncertainty to help utilities fully address dynamic market conditions and risk. This approach helps utilities determine the portfolio that best balances the multiple objectives of least cost, most stable, most reliable, diverse, and environmentally desirable energy portfolio outcomes. Siemens evaluates asset disposition or retirement strategy, emission controls retrofitting, and new asset investment needs. Rapid adoption of technological breakthroughs in future scenarios and stress test on proposed resource plans across a wide range of outcomes will be considered.

- Market entry strategy
  Siemens guides businesses into energy and financial markets in a manner that allows them to ambitiously capitalize on emerging opportunities. The Siemens expertise in purchasing, joint ventures, and self-build alternatives helps customers design business plans they can rely on in order to grow their businesses. Siemens explores strategic relationships, and advises on project development and partnerships. Capabilities cover research and analysis to execution of market entry strategies, incorporating detailed market assessments.
- Market forecasting and analytics
  In any planning exercise, managing risks and analyzing opportunities involves assessing an array of different potential market outcomes. Through the Siemens MarketLinkSM process, it is possible to provide customers with a meaningful range of economic projections, based on different scenarios with regard to the economy, energy supply and demand, fuel prices, electricity consumption, and renewable generation mix. Drawing upon a broad range of knowledge and expertise in macroeconomics, fuel markets, power markets, environmental markets, and policy and engineering, Siemens provides a set of fundamental market driver scenarios that can establish effective frameworks for decision-making. This process allows customers to examine performance under a range of outcomes rather than a single-point projection. The methods include:
  - State-of-the-art analytical framework with MarketLinkSM
  - Quantified ranges of outcomes for various 'states of the world'
  - Targeted analysis around key drivers for customers, such as fuel prices, energy demand growth, power market outcomes, and policy structures
  - Customized scenario development to meet the needs of specific customer issues and opportunities.
- Risk management
  Siemens' customers experience growing market complexities and internal challenges, which require the adoption of a risk-cognizant business culture focused on maximizing risk-adjusted return on capital across a number of potential investment alternatives. Customers are assisted in understanding, measuring and mitigating potential enterprise risks to corporate profitability under a structured enterprise risk management (ERM) program. The Siemens ERM program is backed by a best-in-class enterprise risk management process and metrics system.
- Regulatory strategies
  Siemens' comprehensive understanding of the needs of infrastructure developers, energy suppliers and transporters, along with consumers of their service offerings, creates a unique perspective to comply with regulatory requirements in obtaining certificates to construct facilities. Siemens supports customers to comply with ongoing operational regulatory filings, and helps them to advocate positions in rates cases and other regulatory proceedings, as well as to demonstrate whether markets are sufficiently competitive to allow market-based rates.
- Expert witness services
  Siemens offers efficient and comprehensive solutions to support legal proceedings and regulatory disputes, providing a holistic approach to litigation support and simplification of complex legal issues for board presentations.

Transaction advisory

The key to high quality transaction support is credible analysis supported by experienced market experts, combined with the rigor to identify and highlight the upside potential of power and midstream assets to the benefit of both sellers and potential buyers. Power transaction support typically includes projections of asset dispatch, revenues from energy, capacity, ancillary services, and renewable energy certificates (RECs) when applicable, as well as fuel costs, non-fuel variable O&M costs, and environmental compliance costs to arrive at project and portfolio gross margins (contribution to fixed costs). Midstream transaction support and due diligence calls upon Pace Global's in-depth commercial and fundamental expertise across the full range of the midstream value chain, deeply grounded in our fuels experts' global perspective.

- Asset valuation and due diligence support
  The Siemens services support asset transactions on both the buy-side and sell-side of a deal, understanding the unique requirements of customers from pension funds to private equity to sovereign funds to major investment banks. Responsive to these needs, Siemens provides customized support for midstream and power investors. Responsive support means high-level indicative bids to keep customers in the race, and rigorous analyses for winning binding bids and bilateral negotiations. Siemens' commercial awareness and sensitivity allows potential investors to assess the full upside, identify the risks, and weigh the ultimate strategic fit of the investment opportunity in a timely and efficient manner.
- Contract structuring and negotiations
  Siemens understands where value and risk lie within key commercial agreements, and what terms are typically acceptable to all parties involved. Siemens is active in energy markets daily, structuring commercial energy transactions on behalf of its customers. This level of activity provides intimate knowledge of the energy markets, project development and financing requirements, and key players that allow to efficiently and successfully structure and negotiate infrastructure- and market-related agreements on behalf of the Siemens customers. The comprehensive contract structuring and negotiations support includes:
  - Commercial terms and pricing for agreements related to fuel and power off-take
  - Contract assistance in partnerships and joint ventures, major equipment procurement, EPC contracts, and O&M agreements
  - Services to originate, structure, and negotiate REC and SREC agreements
  - Detailed, expert analysis and data to support negotiating positions.

1
2
3
4
5
6
7
8
9
10
11
12
?

- Financing concepts
  Experienced power and midstream analysis in support of financing is a key component of the Siemens transaction advisory support. Whether for Term Loan B financing of merchant power exposure or bank debt for midstream assets, the Siemens market experts provide timely, efficient support for cash flow analyses to structure debt or support equity raise. Financing support includes standard reports for syndication, expert participation in conference calls with rating agencies and other stakeholders, as well as fundamental analysis insights.
- Valuation services
  Working in close collaboration with the market experts in power and midstream natural gas, the Siemens finance team uses market studies and simulation outputs – as well as operational and financial data on specific assets – as inputs into proprietary financial models to produce discounted cash flow (DCF) analyses. These DCF analyses, combined with data on comparable sales, are used to produce industry standard valuations for investors, bankers, and other key stakeholders.

Solution engineering

Key to effective, efficient and secure infrastructure is the right combination of technologies, processes and people that is based on a solid understanding of the intended outcome. Siemens provides integrated solution blueprints on a conceptual level to use as the foundation for solving individual challenges fast and effectively.

- Technology reference architectures
  Joining IT and OT technologies into a combined functional frame of reference to optimize complexity and cost.
- Data and event reference models
  Smart Grid and distribution automation concepts rely heavily on measurements and their interpretation generating events to react to changing market conditions.
- IT/OT architecture management
  The continuous need to integrate IT and OT technologies requires answers to a lot of questions, e.g., who owns and manages a particular technology, or how do IT and OT integrate.
- Cyber security consulting
  Across the globe threats, standards and regulations are evolving fast like NERC-CIP and ISO27000. This requires constant attention to cyber security and security management systems.

9.3 Power system consulting

9.3.1 General

The reliability of electric power systems cannot be taken for granted – particularly, availability requirements of 99.9 % or higher, which is a value rarely met by other systems of comparable technical complexity. The challenge to provide any amount of electricity required, at any time, at any customer's premises, and with the appropriate quality, is achieved by a large and complex system of power plants and extensive transmission and distribution networks. An electric power system is more than just a combination of switchgear, transformers, overhead lines, cables, and secondary equipment for protection, control and communication. It is the integration of all these components into an overall solution meeting all relevant expectations: Namely to support the overall business targets and strategy, deliver a sound financial performance and an adequate technical performance – both in the view of the utilities and also of the end customers. Consequently, different requirements need to be taken into account during the planning process in order to turn today's power systems into the "Grids of the Future":

- Strategy
  Ensuring that system development and operation support the overall business strategy of the utility.
- Economical performance
  Meeting defined budgets and other economic performance criteria in individual projects and for the entire system.
- Safety
  Protecting people and equipment against harm and damage caused by electricity, especially by electrical failures.
- Security
  Safeguarding the stability of the system, especially after disturbances like load shifts or electrical failures.
- Technical adequacy and power quality
  Connecting and supplying all end customers according to defined technical criteria, including power quality demands, e.g., on reliability and voltage level, both in normal and disturbed operation.
- Ecological performance
  Preventing pollution and minimizing the impact of electrical equipment (e.g., of transmission lines) on the environment.

In addition to the large set of different and sometimes even contradictory requirements, planning activities in power systems have to address very different time horizons: from operational planning for the immediate future, through project planning addressing several months or years, to the development of long-term guidelines and visions for decades into the future. In order to ensure that the development of a power system follows one clear strategy and roadmap, it is important to first have available a commonly agreed upon-long-term system concept. In this way, all activities and measures in the short-term and medium-term can be oriented and aligned accordingly.

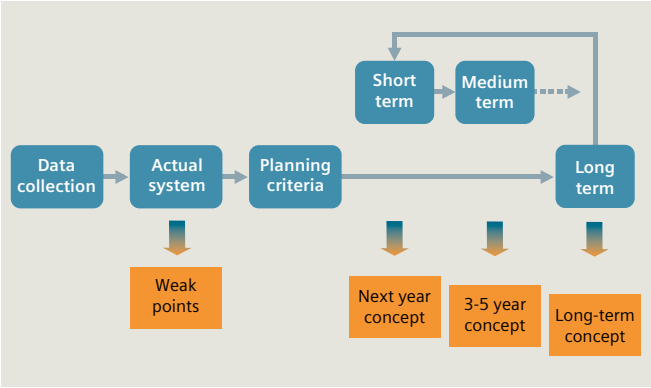

Fig. 9.3-1: Strategic power system planning process

Fig. 9.3-2: Planning tasks related to a typical project lifecycle

Electric power systems are under constant development to keep pace with operational needs and adjustments in day-to-day business, and to meet the changing demands of customers and regulation. This is why planning activities are relevant and beneficial over the complete lifetime of equipment, plants and systems, rather than just in the explicit concept and planning phases at the beginning of their lifecycle. Examples for relevant planning tasks along the complete lifecycle are given in fig 9.3-2.

Every power system consulting project is unique, since it has to consider the specific challenges, current situation, overall framework, and the history of the system, utility and customers. Nevertheless, from a technical perspective, an individual project consists of a defined set of common system analysis tasks. This is the basis of the following portfolio description. At the end of this section, typical use cases are presented to highlight selected types of projects.

9.3.2 Portfolio

Steady-state system studies

Steady-state system studies define the structure and configuration of electric power networks. These are the basis for a solid system performance. With today's challenges, such as system integration of renewable generation, security requirements, and overall tighter operational margins, this is a demanding task. Steady-state system studies include:

- Network analysis
  Technical calculations for a given structure and configuration of a power system.
- Network structure development
  Development and performance validation for alternative power system structures and configurations, ranging from short-term operational planning to long-term master planning.
- Neutral earthing studies
  Development and performance validation of appropriate neutral earthing concepts and configurations.
- Earthing system measurement and design
  Measurement of specific soil resistivity, as well as the development and performance validation of earthing concepts and configurations.

Dynamic system studies

Various activities and events in an electric power system trigger dynamic phenomena in the interconnected system equipment and generators. Modeling, analyzing and optimizing the dynamic performance are key requirements to ensure the stability and security of a power system. This holds true for normal and especially disturbed operation, as well as for the design and optimization of equipment. Dynamic system studies include:

- Dynamic system analysis
  Modeling and analysis of the dynamic performance of equipment, such as generators, motors and systems, including mechanical equipment (e.g., shafts of rotating equipment) as well as steam supply systems.
- Power electronics modeling and analysis
  Detailed modeling and performance analysis of AC/DC power converters, high-voltage direct current (HVDC), and flexible AC transmission systems (FACTS) equipment.
- Controller and machine measurement, modeling and analysis
  Detailed modeling and performance analysis for controllers, as well as measurement of controller response and performance of electrical machines.

Transient system studies

Overvoltages from lightning strikes, electrical failures, switching actions, and other transient phenomena may significantly impact system performance and equipment condition. Modeling, analysis and insulation coordination studies lay the foundations for the resilience of equipment and the entire system. Transient system studies include:

- Transient studies
  Modeling and analysis of overvoltages and other transient phenomena, as well as switching actions and their impact on system performance.
- Insulation coordination studies
  Evaluation of voltage stresses, determination of appropriate insulation levels and selection of suitable protective devices for equipment and systems.

Protection and control system studies

Protection and control aspects are essential for the operational performance of electric power systems. Therefore, they are integral parts of system planning studies. A sound analysis of the individual requirements and relevant operating scenarios, the development of appropriate schemes, and a detailed coordination of individual relays and equipment ensure that operational performance targets are achieved. Protection and control system studies include:

- Protection system design and coordination
  Development of suitable schemes for power system protection and coordination of appropriate settings for protection relays.
- Instrument transformer analysis
  Dimensioning of instrument transformers in substations and switchgear, especially current transformers in gas-insulated switchgear (GIS).
- System control and automation concepts
  Concepts, configurations, and equipment for communication, automation and control in power supply systems.

Power quality system studies

Power quality issues – mainly harmonics, but also flicker or voltage fluctuations – are of increasing concern in today's power systems. This is driven, for instance, by the increasing use of power electronics. These issues may significantly impair system performance and customer processes, and can even cause equipment damages and process shutdowns. Appropiate studies of power quality, including modeling and mitigation of power quality issues, help to ensure operational performance. Power quality system studies include:

- Power quality measurements, analysis, and filter design
  Measurement, evaluation and analysis of power quality-related phenomena, especially harmonics, fault diagnostics, development and performance validation of appropriate filters.
- Interference and electromagnetic field analysis
  Analysis of interferences of electric power systems with other networks and systems, as well as modeling and calculation of electromagnetic fields.

9.3.3 Typical use cases

System security

The growing complexity of power systems and the operating of these systems closer to their safety margins increases the risk of blackouts. To correctly assess a power system's stability, the operator needs to understand the stability margin and may require assistance during the decision making process when it comes to finding the most efficient solution.

- Dynamic Security Assessment (DSA)
  Power system stability plays an increasingly important role in system operation and planning today. The stability limits of these systems are often reached far earlier than their thermal or rated limits. This means that network operation cannot rely on data acquisition and static n-1 analyses only. Using DSA methodologies and tools is the most reliable way to avoid blackouts and at the same time safely operate the power system closer to its limits. Such tasks are enabled by the product SIGUARD® DSA (see section 9.4.2) which can also be applied in offline studies.
- Protection Security Assessment (PSA)
  Protection systems are crucial for system security because they limit the impact faults have on power systems. Continuously evolving power systems and rapidly changing operating conditions make it difficult to calculate, verify and validate protection settings. To review the adequacy of protection settings rigorous protection security assessment is required, which must take into account all relevant system, operating and fault conditions. These assessments should be carried out at regular intervals, thus only automated solutions can manage them efficiently.
- Phasor Measurement Unit (PMU) placement studies
  Optimum PMU placement studies help to decide on the number and location of PMU devices in power systems. The selection of the optimum locations depends on the topology of the power system and on the physical phenomena affecting the system, such as power swings, angle separations, and voltage stability problems. Optimum PMU placement avoids one-time costs for devices and installation, as well as continuous costs for communication, data storage, maintenance and support.

Grid code compliance

As electric power system loads continue to increase and older power plants are decommissioned, a significant number of new power generation units, including conventional fossil-fired and renewable energy units, are connected to the transmission system. These new power plants create new challenges for the existing grid. Interconnection criteria or grid codes help to ensure that the interconnection of a proposed generation project will not negatively impact the reliability performance of the power system.

- Screening study
  High-level review of the transmission capacity in the immediate surroundings of one or more proposed plant sites to determine if the plant's output can be exported to the grid with no or limited restrictions.
- Feasibility study
  Steady-state power flow and short-circuit analyses of the transmission system with the proposed interconnected plant. This will provide the power plant developer or owner with preliminary information on whether major investments will be required to reinforce the transmission system for the interconnection project.
- System impact study
  Thorough steady-state and short-circuit analyses that consider a range of relevant system operating scenarios, complemented by dynamic simulations to evaluate the transient and dynamic performance of the network and ensure compliance with the transmission network criteria or grid code.
- Facility study
  Definition of equipment requirements for the interconnection project and, if required, for upgrading the power system to maintain reliability. This step typically involves the interconnecting transmission network owners who will provide input on their equipment preferences and practices.

Integration of distributed and renewable energy sources

Due to environmental, but also customer-specific, economic or supply security requirements, increasing shares of power generation come from distributed energy resources and / or renewable energy sources. These sources include controllable loads, and possibly co-generation or storage units. Beneficial integration of dispersed and renewable generation into a distribution grid, or of large-scale renewable generation into transmission systems, poses a considerable challenge to existing power system planning and operation methods and software tools.

- Integration of dispersed generation
  Successful integration of dispersed and renewable generation into distribution networks relies heavily on effective planning and operation strategies. Integration studies address all relevant issues in system architecture and configuration. These studies particularly focus on identifying the optimal connection point, power quality, protection concepts, and decoupling concepts.
- Wind farm design
  Successful wind farm design and system integration should consider both the design requirements for the internal network of wind power plants (WPPs) and a reliable performance and control of the plant amid full compliance with the grid code. A generation interconnection study ensures an optimum integration of the WPPs into the grid with regards to reliability as well as cost-efficiency.
- Grid code compliance investigation
  A thorough analysis enables the project developer and / or system operator to identify the right connection strategy before the actual installation of distributed energy resources and / or renewable generation. Such an analysis considers several aspects, including optimum connection point to the grid, dimensioning of the switchgear considering technical and economical aspects, losses, power quality, and reliability of supply.

- System interconnection studies
  System interconnection studies support the interconnection of distributed / renewable generation plants while maintaining the overall system's technical performance. The results identify impacts on power grids and solutions in order to address relevant issues and provide technical advice to either the project developer or the system operator.
- Wind turbine modeling
  Comprehensive modeling of wind turbines with specialized simulation software is the basis for detailed wind farm investigations, which are an essential part of any design or interconnection study. The validation of model performance to measurements is required for certification in some markets, and is a valuable sales asset for the turbine manufacturers.

Smart Grid concepts and new technologies

The increasing share of renewable energy sources and the growing number of available technologies have brought about different trends and requirements in the Smart Grid market. Power system operators are challenged with minimizing the impact of new generation on the system performance. They need to maintain or even improve security of supply and power quality, while investments for network extensions are under increasing economic pressure.

- Design of Smart Grid concepts
  An optimum overall concept for innovative system architecture and configuration is developed, considering the latest innovative technologies such as primary components, communication technologies, and smart grid applications and functionality. Performance analyses ensure adequate system performance, sustainability, and efficient operation.
- Microgrid and off-grid solutions
  Island grid or off-grid electric operators, as well as developers of special customer projects, often struggle with high costs for electricity and low supply reliability. Intelligent solutions for system design, system protection, automation, and the integration of renewable energy sources are key to a technically and economically feasible, and even more ecological, microgrid power system concept.
- Electromobility
  The emerging trend to substitute combustion engine-driven cars with electric vehicles will have a large impact on existing power systems, especially on LV and MV distribution. Based on an analysis of the current power system and future scenarios, the enhancement of the system's performance and the integration of Smart Grid technologies can be prepared to allow an integration of electromobility at reasonable costs.
- AC/DC hybrid systems
  Today there is a higher demand to transport large amounts of power over long distances. Examples include the increasing installation of offshore wind farms far away from the shores, and the growing wide-area power transfers in large interconnected systems. In many projects, DC solutions are preferred over AC solutions for technical and / or economical reasons. Due to reliability issues, in the future the existing point-to-point HVDC connections can be interconnected to form a DC network which integrates, for instance, several wind farms and connects several AC networks into one system. A thorough understanding of the individual components is required to design complex DC network concepts and hybrid AC/DC systems to ensure appropriate and stable system behavior.

Disturbance investigation

From the system perspective, equipment faults and failures occur frequently. Many fault and failure events do not affect system operation. However, some events do cause undesired and sometimes incomprehensible impacts. Especially for multiple faults, the actual root causes, or even the observed events in system operation, are not easy to trace. For these fault cases the knowledge of different specialists has to be coordinated. This may include the areas of protection, insulation coordination, system dynamics, network operation, and equipment of different vendors. In addition, it is necessary to consider post-failure conditions, events and operational procedures, and to cross-check official statements.

- Site investigation and measurements
  Data verification may include site visits, interviews, analysis of reference events, and measurements on-site or in a laboratory. The analysis is backed and supported by state-of-the-art, calibrated measuring devices.
- Modeling and simulation
  Based on the theoretical analyses, a draft hypothesis on the disturbance event is developed. By modeling the steady-state, dynamic and transient behavior of equipment and systems in sufficient detail, it is possible to verify the root cause and to propose validated mitigation measures.

9.4 Software solutions

Various calculations of technical and economic characteristics of the actual system or of planning variants are part of the grid planning process. The availability of suitable software tools is highly important. Besides the obvious requirement that calculation results should be as accurate and reliable as possible – particularly with regard to the quality of both calculation tools and input data – several other aspects are also relevant for the successful and efficient use of power system planning tools:

- Power system model
  The quality of calculation is dependent, above all, on the quality of the input data. The structure and complexity of the data model must support the various calculations, including those for very large models. In large systems, the question of how the network and the data are structured and presented to the user is of crucial importance for the effective use of the software tools.
- User interface
  Calculation algorithms implemented in the software tools have reached a very high level of complexity and are controlled by a multitude of different parameters. The handling and management of large network models is a complex task on its own. Therefore, an intuitive but comprehensive user interface is a key requirement for modern software tools.
- Management of calculation results
  After the actual calculations have been performed, the results need to be analyzed and presented. In many cases, this means more than printing tables or network diagrams with certain result values attached to the respective components. The compilation of comprehensive graphical representations, tables and reports – both according to predefined and user-defined structures – provides significant support in the execution of network planning projects, and should be supported by the software tools.

9.4.1 PSS® product suite

Siemens has used its great experience and know-how in power system planning to develop powerful system simulation and analysis tools to assist engineers in their highly responsible work. The software tools of the Power System Simulator (PSS®) Product Suite are leading products with respect to technical performance and user-friendliness. Comprehensive interfaces enable the interaction of all PSS® Product Suite tools, and also support a vendor-neutral integration with other applications and IT systems.

The PSS® Product Suite includes:

- PSS®E platform, comprising
  - PSS®E, power flow, dynamics, short circuit, and optimal power flow for transmission system planning
  - PSS®MUST, transmission transfer capability, sensitivity, and impact analysis
- PSS®SINCAL platform, comprising
  - PSS®SINCAL, planning of power generation, transmission, distribution and industrial grids
  - PSS®NETOMAC, dynamic system analysis

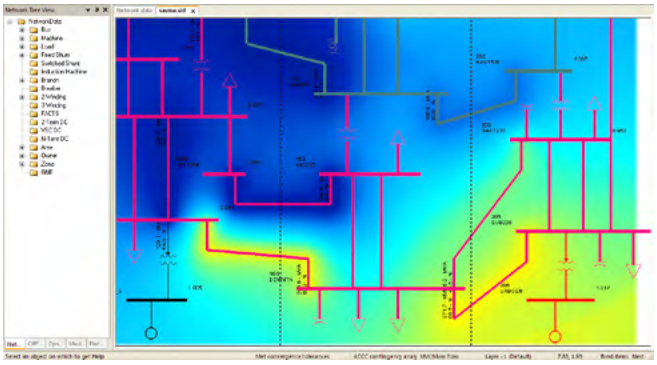

Fig. 9.4-1: Visualizing PSS®E results using single-line diagram contouring

- PSS®PDMS, protection device management system
- PSS®ODMS, CIM-based model management and analysis for operations and planning
- PSS®MOD, project modeling and data management for PSS®E
- CTDim, current and voltage transformer dimensioning.

PSS®E Platform

PSS®E

PSS®E high-performance transmission planning software has supported the power community with meticulous and comprehensive modeling capabilities for more than 50 years. The probabilistic contingency analyses and advanced dynamics modeling capabilities included in PSS®E provide transmission planning and operations engineers a broad range of methodologies for use in the design and operation of reliable networks.

PSS®E is the Siemens offering for power system transmission analysis that continues to be the technology of choice in an ever growing market that exceeds 115 countries. PSS®E is an integrated, interactive program for simulating, analyzing and optimizing power system performance. It provides the user with the most advanced and proven methods in many technical areas. PSS®E base power flow package can be enhanced to include one or all of the following modules:

- Advanced Power Flow
- Dynamic Simulation
- Short-Circuit Calculations
- Optimal Power Flow (OPF)
- Geomagnetic Induced Currents (GIC)
- Data Visualization and Reporting Module (DVRM)
- Advanced Results Visualization (RAV)
- Graphical Model Builder (GMB)
- Eigenvalue and Modal Analysis (NEVA)
- CIM Importer
- Model Management Module
- PSS®E-PSCAD Network Data Conversion
- PSS®E-PSCAD Co-Simulation
- Small Signal Stability Analysis Module
- Measurement Interface Module
- Advanced Contingency and Remedial Action Scheme Tools
- PSS®E Parallel Dynamics Module.

1
2
3
4
5
6
7
8
9
10
11
12
?

PSS®MUST
PSS®MUST is a powerful tool for quickly and easily calculating transfer capabilities, finding the impacts of transfers on transmission networks, and performing advanced sensitivity analysis.

PSS®MUST complements PSS®E data handling and analysis functions with the most advanced and efficient linear power flow and user interface available. PSS®MUST's speed, ease-of-use, and versatile Microsoft® Excel interface simplifies and reduces data setup time, and improves the display and versatility of the results.

PSS®SINCAL platform

PSS®SINCAL
PSS®SINCAL is a comprehensive analysis software for all power transmission, distribution and industry system planning and simulation needs. It provides full balanced and unbalanced modeling for high-, medium- and low-voltage grids, and supports the design, modeling and analysis of both electrical as well as pipe networks, such as water, gas, and district heating / cooling systems.

Thanks to its modular and fully integrated design, PSS®SINCAL enables a high level of customization according to individual needs. The extensive range of specialized modules is based on sophisticated algorithms which are optimized for both accuracy and high performance.

The following modules are available for electrical grid planning:

- Power Flow (balanced / unbalanced)
- Load and Generation Profile Calculation
- Load Development,
- Load Assignment / Transformer Tap Detection
- Optimal Network Structures
- Load Flow Optimization
- Optimal Branching / Tie Open Points
- Reactive Power Optimization and Capacitor Placement
- Volt / Var Optimization
- Load Balancing
- Contingency Analysis / Restoration of Supply
- Probabilistic Reliability
- Cost Calculation
- Short Circuit (1-, 2- and 3-phase)
- Multiple Faults
- Low-Voltage Fuse Coordination
- Distance Protection
- Time-Overcurrent Protection
- Protection Simulation
- Arc Flash Hazard
- Harmonic Calculation
- Ripple Control
- Motor Start
- Stability (RMS)
- Electromagnetic Transients (EMT)
- Dynamic Network Reduction
- Eigenvalues / Modal Analysis
- Line and Cable Constant Calculation

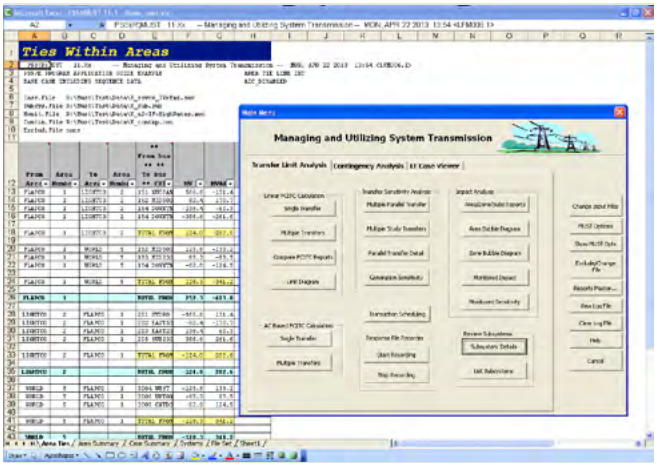

Fig. 9.4-2: Performing transfer limit analysis using PSS®MUST

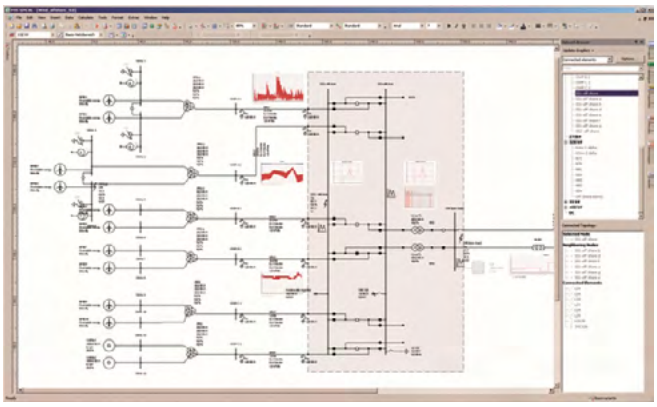

Fig. 9.4-3: PSS®SINCAL Platform: offshore wind farm with results from dynamic, harmonic and long-term load profile simulation

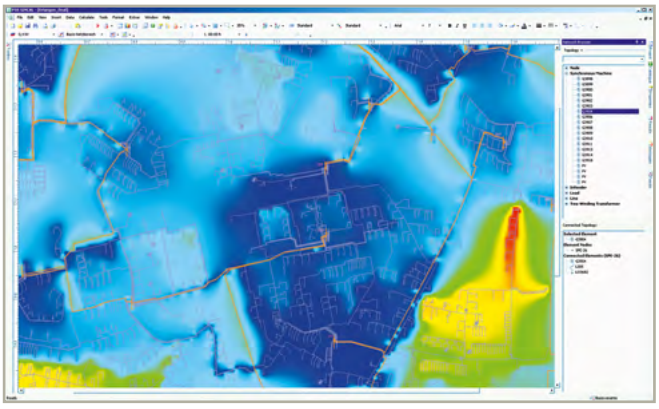

Fig. 9.4-4: Low-voltage geographic power grid with iso-area for voltages

- Earthing Systems
- Distributed Generator Grid Connection according to EEG and NER Australia
- Graphical Model Builder (GMB)
- Manufacturer Models (e.g., Simulink)
- Generic Wind Models and FACTS Models.

1
2
3
4
5
6
7
8
9
10
11
12
?

The following modules are available for gas, water and heating / cooling network planning:

- Steady-State
- Contingency Analysis
- Profile Simulation (quasi-dynamic)
- Water Tower Filling.

With PSS®SINCAL's object-oriented data model, user-defined applications can easily be developed. Sophisticated case and data management facilitate the handling of complex projects and enable multi-user project management. PSS®SINCAL is fully CIM compatible (CIM10-CIM16, including ENTSO-E CGMES) and can be easily integrated into systems such as Geographical Information Systems (GIS), SCADA and Meter Data Management Systems (MDMS). Strong automation capabilities (i.e., with Visual Basic) complete the possibilities for efficient processing.

PSS®NETOMAC

PSS®NETOMAC provides and manages any kind of information on the dynamic performance of a power system. It offers a wide range of options for simulating electromagnetic and electromechanical phenomena in electrical power supply systems, covering the most important methods for the analysis of dynamics in the time and frequency domains. System operators can choose between a variety of program configurations – from "Basic" to "Professional". The program modules can be selected to meet the individual requirements of each user. Dynamic user models can easily be built and debugged with the graphical model builder (GMB).

The following modules are available:

- Identification and Optimization
- Frequency Domain and Resonances
- Flicker Evaluation
- Torsion
- Eigenvalue Screening
- Voltage Profile Homogeneous Conductors
- Real-Time Testing of Protection Equipment
- Graphical Model Builder (GMB)
- Eigenvalue / Modal Analysis (NEVA).

PSS®PDMS

Numerous settings are needed to parameterize different functions of a modern protection device (time-overcurrent protection, overload protection, impedance protection, intermittent earth-fault protection, monitoring measurements, etc.). At any point in time, starting from the setting calculation, parameterization and testing, the settings as well as the accompanying documents must be traceable, and the workflow state clearly indicated. Considering the involvement of different staff members during the workflow, as well as the changing network configurations with corresponding parameter sets and handling of different firmware, the management of protection data is a complex process.

PSS®PDMS (Protection Device Management System) is a universal program to centrally manage protection devices and their settings. All data is stored in a central relational database, and is available for data exchange with other programs such as relay parameterization software. Settings can be exchanged between the power system analysis software PSS®SINCAL and PSS®PDMS.

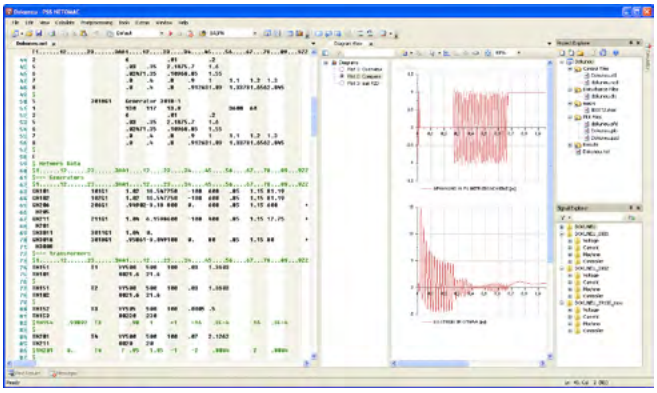

Fig. 9.4-5: Graphical user interface (GUI) of PSS®NETOMAC

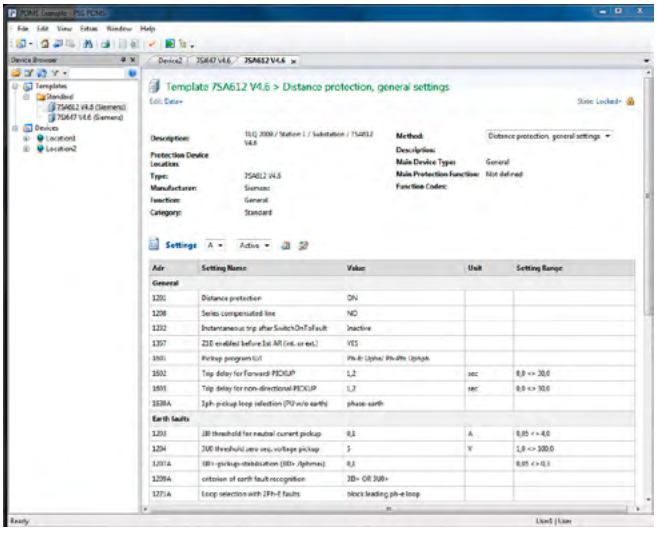

Fig. 9.4-6: PSS®PDMS user interface

1
2
3
4
5
6
7
8
9
10
11
12
?

PSS®ODMS

PSS®ODMS is a multi-purpose software product for electrical power transmission system planners and operators. The software is currently used by power companies around the globe to manage grid / network models, train system operators, augment existing SCADA / EMS network analysis functions, and facilitate compliance with interoperability regulations based on the IEC CIM 61970 standard.

PSS®ODMS allows transmission planning and operations engineers to create, maintain, analyze and exchange network-related data quickly and easily. It tears down interoperability barriers by providing a fully CIM-compliant (IEC 61970) network modeling platform, including the ability to convert between various proprietary data formats. Entso-E attested conformity according to CGMES enables PSS®ODMS customers around the globe to enjoy the benefits of:

- Greater efficiency in their model exchange workflows / business processes
- Higher degree of accuracy in power system studies and simulation
- Increased power system reliability / security
- Reduced regulatory violations / fines.

PSS®MOD

PSS®MOD is a software product that makes it easier and more efficient for existing PSS®E users to manage a large number of change cases across multiple concurrent users. The product brings efficiency, order and accuracy to the process of creating, maintaining and exchanging PSS®E-based network models in complex, multi-user settings.

PSS®MOD revolutionizes traditional approaches to managing network models used in transmission planning studies by providing a web-based application with an extensive set of features supported by a centralized data repository. PSS®MOD is currently used by large and small planning departments to coordinate production and publication of large, aggregated base cases, as well as support for interconnection and reliability cases. PSS®MOD coordinates time-bound network model data inputs from multiple users, and is able to assemble a complete study case for any point in time. PSS®MOD provides consistency and transparency for network models.

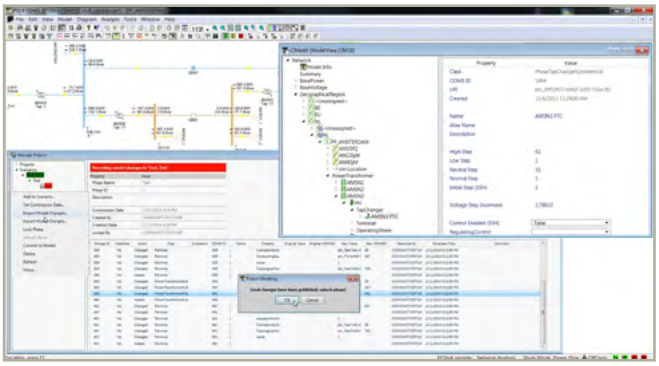

Fig. 9.4-7: PSS®ODMS CIM-based hierarchical network modeling interface

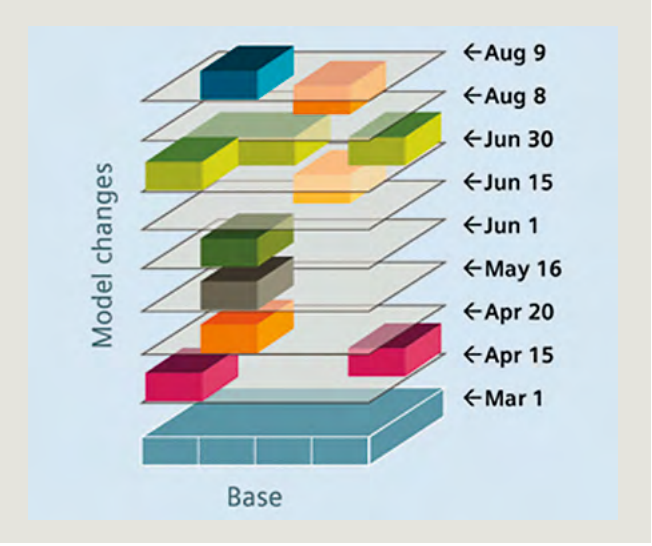

Fig. 9.4-8: PSS®MOD projects

1
2
3
4
5
6
7
8
9
10
11
12
?

CTDim

The optimization of instrument transformers with respect to their technical requirements and their economic impact builds an important milestone within every power system project. CTDim is a software tool for current transformer (CT) and voltage transformer (VT) dimensioning.

Main features include the following:

- Straightforward check whether CTs and VTs fulfill requirements of connected devices.
- Supports distance protection, generator protection, transformer protection, line differential protection, busbar protection, as well as overcurrent protection. Both low impedance and high impedance protection schemes are covered.
- Powerful documentation: Short and long reports are prepared automatically.
- Includes both protection as well as metering CT cores. Covers dimensioning for VT protection and metering windings. Supports international standards IEC and ANSI.
- Transient simulation of CT behavior for all above-mentioned protection CT classes and protection devices. COMTRADE export function allows hardware testing.
- Large relay and metering instrument database: Siemens' numerical relays are fully supported, as well as a large number of non-Siemens devices.

CTDim makes instrument transformer dimensioning more efficient. It saves engineering and production costs by optimizing the current and voltage transformer data.

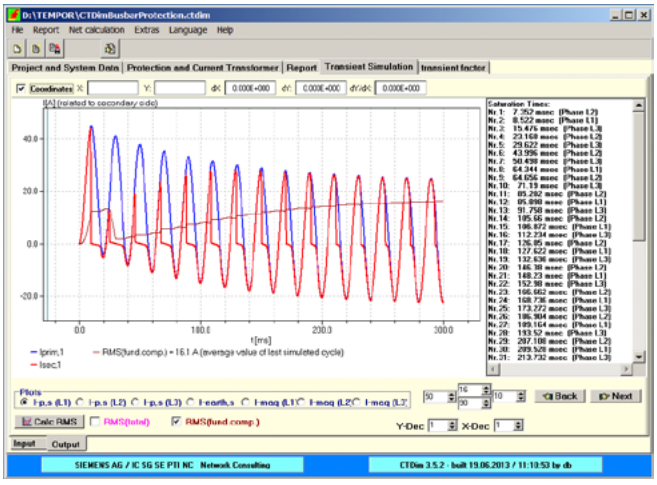

Fig. 9.4-9: CTDim: results of a transient simulation

1
2
3
4
5
6
7
8
9
10
11
12
?

9.4.2 SIGUARD® solutions

SIGUARD® solutions offer a combination of software, training and consulting to prepare operators for the new challenges and the upcoming security requirements in power system operations. Applying SIGUARD® solutions provides the following benefits:

- Blackout prevention
- Reducing security margins / OPEX
- Increase of power system utilization
- Improvement of situational awareness.

SIGUARD® solutions support the decision making process of the power system operator. The basic idea is to use measurement based and model based analytics in order to increase the observability and the controllability of the system, and to perform an automatic, intelligent security assessment.

The SIGUARD family includes:

- SIGUARD® DSA, dynamic security assessment
- SIGUARD® PSA, protection security assessment
- SIGUARD® PDP, wide-area monitoring.

SIGUARD® DSA

SIGUARD® DSA, the dynamic security assessment tool, analyzes possible contingencies and assesses the system stability. It provides the operator with an overview of the current and near-future state of system stability. In addition, the system simulates possible preventive or reactive actions to mitigate stability problems.

The highly sophisticated algorithms of the PSS® Product Suite perform dynamic contingency simulations. The computation power required for this is scalable from a single laptop all the way to computation clusters. All dynamic stability problems, such as transient stability, voltage stability, and oscillatory stability, are taken into account. The high-speed simulation engine makes it possible to analyze the entire range of stability issues ahead of real time – with a single tool that uses a single system model.

Cascading outages caused by system dynamics can be observed and analyzed with the embedded protection simulation in order to prevent blackouts of the power system. The solution includes customization and integration of SIGUARD® DSA into any IT environment. The adaptation and long-term maintenance of the power system model as well as consulting services are offered.

SIGUARD® PSA

SIGUARD® PSA, the protection security assessment tool, analyzes the selectivity, sensitivity and speed of the entire protection system. It enables a rigorous protection system performance audit.
SIGUARD®PSA offers a comprehensive protection security solution that comprises:

- Network and protection data management (including data collection and update)
- Network and protection simulation

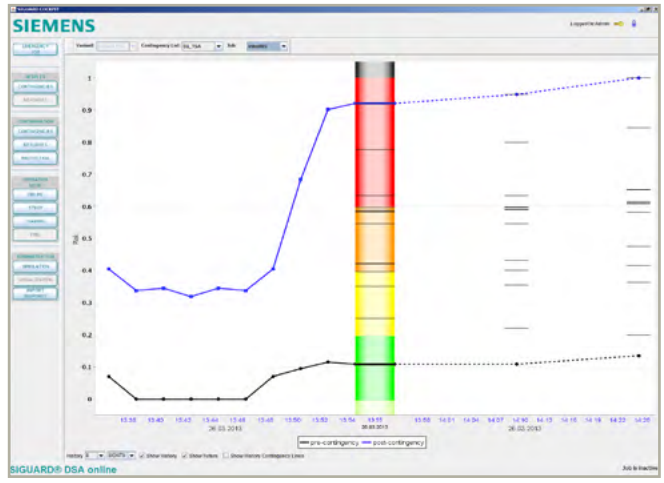

Fig. 9.4-10: SIGUARD® DSA cockpit showing risk of instability for the past (left), present (middle), and future (right) power system states

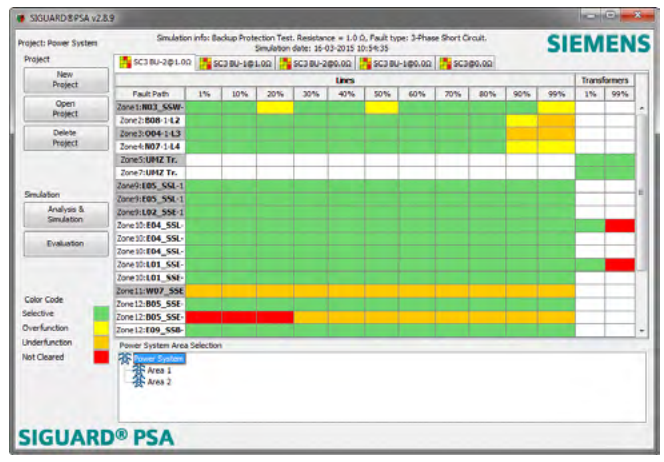

Fig. 9.4-11: Selectivity evaluation with SIGUARD® PSA

- Protection security assessment, such as the detection of non- selectivity, and of hidden as well as critical faults
- Online result visualization and documentation
- Protection setting improvement.

SIGUARD® PSA enables protection engineers and operators to perform fast protection security assessments for reliable protection setting determination, secure system operation, and of cascading trippings prevention.

SIGUARD® PDP

SIGUARD® PDP, the phasor data processor tool, uses PMUs (Phasor Measurement Units) – a cutting-edge phasor measurement technology – to observe the actual state of the power system. It monitors system variables and informs about critical system states. For more information on this product, please see chapter 6.4.7.

Intelligent PMU placement is crucial for cost saving, and for optimum observability of dynamic system behavior. Optimum PMU placement studies are offered as consulting services from Siemens PTI.

10 Services and support

10.1 Customer services 538

10.2 Transmission solution services for HVDC systems, FACTS, PTL, cables, substations and grid access 539

10.2.1 Service for HVDC systems and FACTS 539

10.2.2 Service for PTL and cables 540

10.2.3 Service for substations 541

10.2.4 Grid access service solutions 541

10.3 Switchgear services for high-voltage products and medium-voltage products and systems 542

10.4 Transformer services (TLM™ – Transformer Lifecycle Management) 545

10.5 Monitoring, diagnostics and digital services 546

10.6 Service programs 548

10.7 Customer support for power and energy 549

10.8 Siemens Power Academy TD 550

10.1 Customer services

The Siemens Customer Services department provides expert solutions and services for power supply systems in the areas of power transmission, power distribution, and industrial energy supply that keep the network infrastructure on the cutting edge in terms of lifecycle, reliability, and environmental friendliness.

More than 2000 service employees around the world accompany customers throughout the lifetime of their assets; from operation and maintenance to repair and retrofit up to the final disposal (fig. 10.1-1).

The customer services portfolio is structured according to the customers' major requirements for transparency, availability, performance, and operations management (fig. 10.1-2).

Customer services are offered for the following assets:

- High-voltage direct current (HVDC) systems and flexible AC transmission systems (FACTS)
- Power transmission lines (PTL) and cables
- Grid access
- Substations
- Switchgear (high- and medium-voltage, air- and gas-insulated)
- Transformers

Fig. 10.1-2: Customer services portfolio overview, according to customer needs

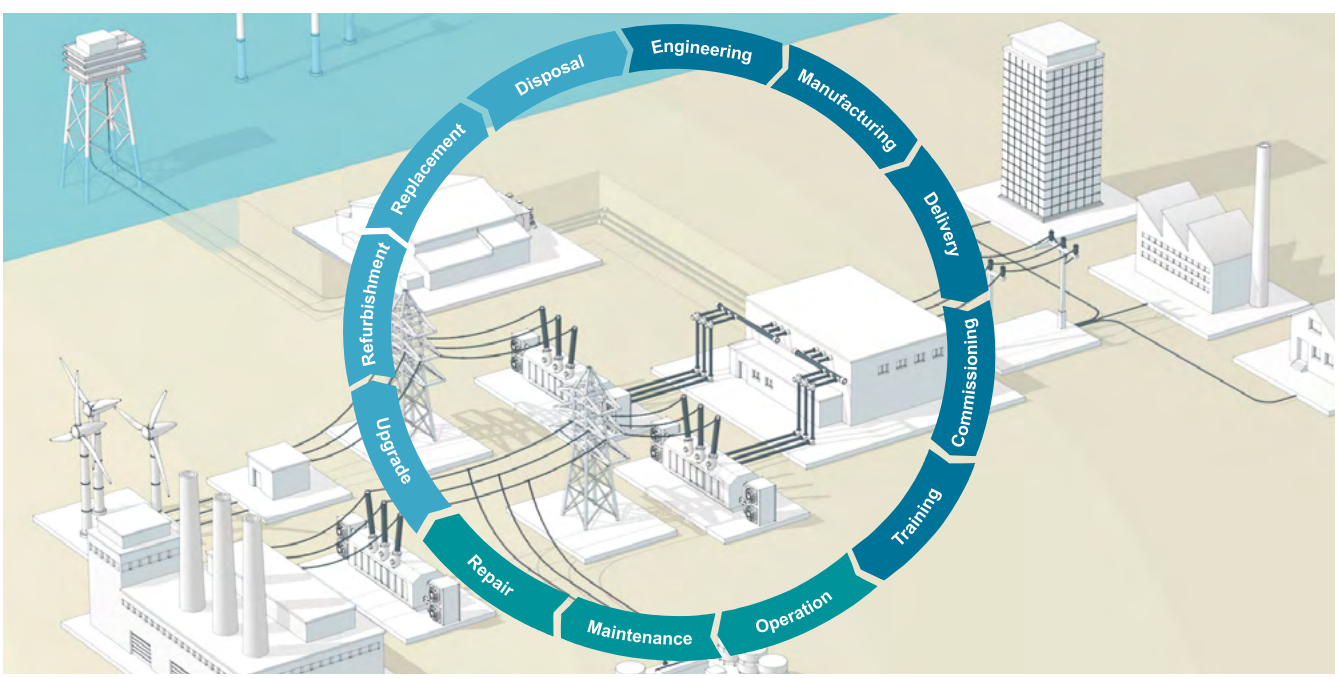

Fig. 10.1-1: Customer services for the entire lifecycle of assets along the energy chain

10.2 Transmission solution services for HVDC systems, FACTS, PTL, cables, substations and grid access

10.2.1 Service for HVDC systems and FACTS

HVDC systems and FACTS have proven their high performance and reliability for many years. The following service offers meet customers' requirements during the service life.

Transparency as prerequisite for optimization

Knowing the condition of HVDC systems or FACTS systems is a prerequisite to run them in a reliable and optimized way. Various services from Siemens aim to give customers a sound knowledge base to take the right decisions on how to run their assets.

Health checks are executed by Siemens technical experts on site. They include a comprehensive check and test procedure to evaluate the general condition. Furthermore, health checks contain a documented visual inspection, on-site repair of small failures and alarms, as well as the evaluation of spare part stocks and risks. Customers receive a detailed asset condition report with recommendations.

Condition monitoring and diagnostics goes even one step further to gain insight into the assets' condition by collecting online data, analysis and diagnostics, giving an early indication for upcoming failures in order to avoid them timely. In addition, **remote services** provide remote monitoring and analysis from Siemens experts 24/7. The database built up by monitoring measures can then be used for **asset management and advisory services,** which comprise, e.g., vendor-independent consulting and the forecasting of asset health and risks.

Continuous availability

To provide reliable power supply is a key success factor for operators and owners of energy infrastructures. The following services meet the system operator's requirements for availability.

In case of unscheduled events or major failures, Siemens offers immediate support with experienced **field services** personnel on site, bringing the system back into normal operation. **On-site repair** or replacement, as well as spare parts supply (if necessary), is available besides a failure description and improvement suggestions.

A **technical support hotline** can be contacted around the clock to have the professional know-how at hand right from the beginning. Senior experts in power and transmission solutions give customers advice, and involve field and repair service or utilize the internal engineering department, if needed.

Spare parts have to be obtainable not only in critical situations, but continuously and throughout the entire lifetime of assets. Siemens supplies high-quality, original and tested spare parts worldwide, and helps customers to optimize their efforts for spare parts handling, while minimizing logistic and storage costs.

Siemens customized **computerized maintenance management system** for all work processes and tasks for assets and human resources increases the productivity as well as the safety of personnel and assets with software features. This includes, for example, professional work planning (preventive/corrective maintenance, upgrades, modifications and refurbishments), efficient resource organization, or the appropriate handling of Health, Safety and Environment (HSE) procedures.

Obsolescence management enables system operators to utilize new technical functions, and helps to avoid cost-intensive supply bottlenecks. It consists of the three major activities:

- Regular provision of up-to-date details on the asset lifecycle
- Recommendations for actions
- System-specific services, e.g. replica, replacement, re-development

Furthermore, Siemens offers **warranty and availability guarantee extensions,** which can include the warranty extension for the complete system or a single component, individual availability of the system performance, and tailored bonus/malus agreements. Customers benefit, e.g., from projectable operating costs and a reduced risk for the return of invest due to fixed annual operating costs.

Maintenance contracts support safety, reliability and availability of HVDC systems or FACTS throughout the entire lifecycle. They are tailored to customer specific requirements, e.g., individual schedules for preventive and corrective maintenance concepts. Technical experts execute the required services and provide technical support during the whole contract term.

High performing assets

Siemens supports system operators in keeping their assets best performing during the entire lifecycle. **Modernization and retrofit** as well as **upgrades and uprates** implement the latest state of the art technology (hardware and software) to extend and increase the efficiency of the assets. **Refurbishments,** meaning an overhaul validated by full production testing according to original specifications and industrial standards, contribute, e.g., to extend the service life. **Extensions** adjust existing systems to new grid requirements and increase their functionality.

Operations management

Operations management services help system operators in operating their assets most economically and reliably at the same time.

Operation services, as a care-free complete-solution, lets Siemens experts run the whole energy infrastructure under predefined performance figures.

Since the availability of spare parts is one important factor to ensure a continuous operation, Siemens **spare parts management** helps to implement an efficient concept regarding the location (centralized vs. decentralized), quantity, and quality control. Regular inventory audits, end of lifetime strategies, and spare parts pooling are also part of the offer.

During the last decades, cybercrime has increased rapidly, and energy infrastructures belong to the most affected sectors. Siemens supports customers in protecting their systems from cybercrime, and to comply with new standards and regulations (NERC CIP, BDEW Whitepaper, IT security laws). **Services for cyber security** comprise:

- Consulting regarding, e.g., requirements by evaluating the own status quo and recommending the resulting security measures
- Patch management (available in three service levels)
- Security audit, penetration test, and incident handling.

10.2.2 Service for PTL and cables

The backbone of the electric power supply consists of high- and medium-voltage cable systems. The limited availability of space and other external factors that restrict the load-carrying capacity of cable systems call for special measures, so that the reliable transmission of electric power can be guaranteed. At the same time, highly specific requirements for the expansion of transmission networks are appearing in Germany and worldwide as a result of the integration of renewable energies. Siemens offers the full range of services for cable systems from a single source, including cable monitoring and diagnostics.

Service for PTL

Siemens gas-insulated transmission lines (GIL) are proven as highly reliable. Nevertheless, since GIL have been in operation for many years, certain maintenance works and service offers are recommended to be executed throughout the lifecycle. Depending on the system operator's requirements, Siemens supportive offerings range from routing maintenance activities, failure investigation, spare parts, repair, and fast repowering to the provision of special equipment, including service technicians on site and constant remote expert support.

To ensure uninterrupted and safe operation of GILs, Siemens provides monitoring services as preventive measures. Partial discharge (PD) monitoring during high-voltage commissioning and throughout the lifetime allows identifying and localizing defects before they become critical. Possible defects are, for example, floating potential, particles on insulators, or freely moving particles and void in the insulator.

Temperature monitoring allows the accurate detection and localization of faults manifesting as temperature events, along the entire GIL installation. Therewith, critical locations for targeted improvement of the thermal environment around the GIL can be identified. In addition, the temperature during operation can be monitored continuously, and thermal bottlenecks can be controlled.

Service for cables

Design and services for high-voltage cable systems
As the system operator's partner, Siemens offers the full range of services for high-voltage cable systems up to 500 kV, starting with the planning of cable dimensions up to final testing after installation. The services from Siemens comprise cables with thermoplastic insulation (e.g., XLPE) for various designs (up to 500 kV), low-pressure oil-filled cables (up to 400 kV), and gas-pressure cables (up to 110 kV). Backed by over 150 years of experience, Siemens has an excellent overview of the entire market, and can offer vendor-neutral advice and support for complete systems and accessories. Siemens employs technologies and high-grade materials matched to the system operators' needs for all work activities: from cable laying tools to the professional assembly of fittings with cable-sealing ends and joints. Assistance is also provided for retrofit, conversion or extension of the cable system. If an existing installation has to be dismantled, Siemens manages the disposal or recycling of cables and cable fittings. For Siemens, the performance of all work activities in accordance with national and international regulations and guidelines is a must.

Cable measurement
Siemens offers cable diagnostics with different detection methodologies, which allow reliable cable condition assessments and ensure exact fault location of installed high- and medium voltage cables. Namely partial discharge (PD) diagnostics, dissipation factor (tan δ) measurement, and frequency domain reflectometry (FDR) are offered by Siemens. For the third methodology, Siemens uses Line Resonance Analysis (LIRA) technology. The LIRA system assesses and monitors the general degradation of the cable insulation caused by harsh environmental conditions (high temperatures, humidity, and radiation). It also detects local degradation of the insulation material as a result of mechanical impact or local abnormal environmental conditions. These diagnostics services are valuable for specific applications in power transmission and distribution systems, for subsea cable installations like in offshore wind farms, or in oil and gas industry, as well as in power plants.

10.2.3 Service for substations

Because top priority is given to operational continuity in substations and power systems, any long-term maintenance, modernization, and system rehabilitation must be precisely planned. These are the right opportunities for OEM (Original Equipment Manufacturer)-driven service projects. Siemens offers a variety of corresponding service solutions for extending the lifespan and size of the substation, or for its modernization. Countless examples worldwide serve as references for successfully executed service projects.

10.2.4 Grid access service solutions

Grid access services are highly customized and holistic solutions, covering the whole system lifecycle of HVDC and AC platforms. Siemens offers tailor-made service solutions for all technology areas of an offshore platform.

Structure (incl. subsea) services include
- Steel and welding
- Coating and preservation
- Marine grows incl. removal
- Any subsea operation with divers and / or remotely operated vehicles.

Cable services include
- Cable fault finding and diagnostics
- Cable survey, repair and reburial.

Systems services include
- High-, medium- and low-voltage systems (AC and DC)
- SCADA (grid, plant and process)
- Power generation and UPS
- HVAC and water cooling
- Fuel, oil and sewage
- Lifting systems and equipment
- Communication and data transfer.

Furthermore, Siemens supports safe operation and offers general infrastructure services for the platforms, like
- Medical services, incl. Medevac
- Logistics and spare parts
- Platform supply and helicopter transfers
- Any marine services.

10.3 Switchgear services for high-voltage products and medium-voltage products and systems

Switchgear in particular have to meet the requirements of the steadily increasing demand for electrical energy. Although Siemens produces high-quality switchgear, throughout their lifecycle of minimum 50 years, aging and wear can significantly impact their functioning.

Customer services for high- and medium-voltage equipment take care of gas-insulated and air-insulated switchgear throughout their entire lifecycle, from the first to the current generation, and from 1kV to 800 kV. In addition to the Siemens products, services are offered for Nuova Magrini Galileo, Merlin Gerin, Elin Holec, Reyrolle, and Allis Chalmers, executed by regional service hubs worldwide.

Transparency – as prerequisite for proactive service

Having transparency on assets, is a prerequisite for system operators to initiate proactive service measures. Targeted maintenance, early detection of upcoming dysfunctionalities – especially if assets are widely spread and difficult to access – is only some among many challenges.

On-site condition assessment and asset audits

Besides inspections during maintenance services, Siemens offers extended diagnostics and condition assessments to provide the basis for asset management and maintenance strategies. Siemens' asset audits are a standardized approach for condition assessments of high- and medium-voltage switchgear. The results are illustrated in user-friendly and well-structured reports, and can be utilized instantly by asset management decision makers.

Monitoring and diagnostics

Siemens offers monitoring and diagnostics products (Assetguards) and systems for high- and medium-voltage switchgear. They cover all essential monitoring elements for both gas- and air-insulated switchgear: UHF Partial Discharge Monitoring (Assetguard PDM), SF6 Gas Density Monitoring (Assetguard GDM), as well as Circuit-Breaker Monitoring (Assetguard CBM) and Medium-Voltage Condition Monitoring (Assetguard MVC). Assetguards are available as stand-alone products, or embedded into an Integrated Substation Condition Monitoring (ISCM) system for entire substations and various assets. For detailed information, see chapter 10.5.

Furthermore, Siemens offerings for **remote services** allow network operators to know the condition of their assets at any time, worldwide, without having own staff on site. Siemens experts supervise and support customers 24/7 in Remote Diagnostic Centers (RDCs) with remote analysis and recommendations. For detailed information, see chapter 10.5.

Availability – for reliable and secure power supply

Siemens supports grid operators to keep their assets up and running. The continuous availability of switchgear ensures reliable and secure power supply. Customers benefit, for example, from an increased Return on Investment (ROI), or the avoidance of penalties and bad reputation due to outages.

Preventive maintenance

Switchgear and systems with a long service life and continuous fault-free operation provide the best conditions for efficient utilization of the operator's system. Siemens' maintenance services ensure that all components work safely and reliably, including major revisions and overhauls to bring assets back to reference condition. Preventive maintenance from Siemens comprehends condition-based and preventive maintenance, including recommended spare parts.

Repair services, spare parts, emergency services and 24/7 customer support

The primary objectives of the maintenance services offered by Siemens are to avoid emergency repairs, and to ensure fault-free operations. However, in case of emergency – if a failure occurs – Siemens will be on site rectifying the fault as quickly as possible. Operators can contact Siemens at any time 24/7 via the on-call duty service. An on-call duty contract determines assured reaction times and the scope of on-site emergency measures. Besides that, the Siemens Customer Support is available 24 hours a day, 365 days a year worldwide for all questions in the area of power and energy. For detailed information, see chapter 10.7.

The prerequisite for successful and fast fault recovery is, of course, the availability of required spare parts. Siemens delivers spare parts, components and kits for all asset series – from current production to series which have already been phased-out. For long-term planning, Siemens' modular designed Strategic Spare Part Solution (SSPS) provides comprehensive consulting services that enable grid operators to optimize their spare parts management.

Performance – keeping pace with technological developments

The energy sector changes ever faster. The demand for electric power supply increases daily while energy networks get more and more complex by integrating renewable energy into the grid. A lot of vintage products are phased out from serial production. System operators can hardly upgrade equipment at the same rapid pace than technology changes.

However, Siemens offers various services to let system operators run their assets best performing and most economically. Customer Services' modification and retrofit capabilities offer many opportunities for optimization, and make use of the latest technical improvements.

Refurbishment, modernization and retrofit comprehends the following services (fig. 10.3-1 and table 10.3-1):

- Replacement of vintage parts with state-of-the-art components
- Upgrading functions to tune the asset for higher requirements by replacing components
- Replacement of wear parts to extend the lifetime of assets
- Maintaining the delivery capability by retrofit as an alternative for a phased-out product
- Asset overhauls that extend asset lifetime and reduce costs for new assets.

System operators benefit from: upgrading functions with reasonable investment, lifetime extension by replacing wear parts instead of buying new products, and the ability to balance the ideal way between capital and operational spending.

As another cost-efficient possibility to increase switchgear performance, Siemens offers **bay extensions** with both up-to-date components and redesigned components for existing switchgear types. Many existing switchgear assemblies need to be extended as result of changing demands. Additionally, the growing complexity of grids requires new modules like reactors or capacitor banks. At the same time, capital expenditure shall be avoided. The advantages of a bay extension are obvious: Switchgear then conforms to the latest specifications for health and environment, is well prepared for future developments of the power grid, and provides save operation for the next 20 years and more.

Siemens can extend all existing GIS types with the latest GIS product portfolio by using adapter modules. Also, vintage GIS types of the 2nd and 3rd generation, as well as all VA-Tech GIS products can be extended with the same vintage GIS type. The existing GIS building infrastructure is used to implement the extension. During the installation period, the existing GIS remains in service.

Fig. 10.3-1: Examples for retrofit

OEM	Type
Siemens	8BD
ABB – Calor Emag	QD3M
ABB – Sace	Uniarc
	Univer4
ABB	Safesix
Magrini	Epoclad
	Composit
	Distrivan
	Multiclad
	Venus
Reyrolle	LMT
	C-Gear
	SMS
	SA 14
	SA 36
Ansaldo	Siclad
Schneider	Fluair
	Belldonne
Sprecher & Schuh	HPTW

Table 10.3-1: Examples for equipment that can be retrofitted

Customer Services also **uprate and upgrade** switchgear. The referring services comprehend:

- Substitution of old GIS modules by state-of-the-art components
- Replacement of VT's, CT's by units with a modern design and higher precision, in order to save costs for the internal losses and to fulfill requirements of modern protection systems
- Check and replacement (if required) of cable compartments and components to increase the rated current
- Replace of porcelain bushings with composite bushings to reduce maintenance costs and, in consequence, the outage time
- Modification of GIS with sensors for modern diagnostic methods.

Operation management – apply efficient operation

Siemens offers different services to support customers in their operations management.

Obsolescence management allows a smooth transition across asset generations by providing early, proactive information on asset obsolescence – including lead times –, as well as recommended actions regarding strategic spare parts, disposal, etc. Apart from other advantages, system operators are enabled to extend the lifetime of existing assets even after major failures or extension projects without (major) design changes.

Trainings

The ability to operate assets properly requires life-long learning – in the case of switchgear, at least 50 years. Different switchgear types, designs and generations must often be handled at the same time. But usually, the operational personnel can neither practice equipment operation or failure simulation, nor even train emergency cases at the customer's premises.

The Siemens Power Academy TD offers trainings for all T&D assets. For detailed information, see chapter 10.8.

Fig. 10.3-2: Maintenance works on a HV GIS 8DN8

10.4 Transformer services (TLM™ – Transformer Lifecycle Management)

The remaining lifetime of transformers decreases continuously as a consequence of normal ageing processes. The transformer's rate of ageing varies considerably from one type of construction to the next. It depends on several different facts such as transformer design, capacity, service and load history, climate, and environmental conditions. The critical factors which influence the rate of ageing are, for example:

- Operating temperatures (under load, ambient)
- Moisture content and increases (e.g., decomposition product of hydrocarbons in insulation)
- Oxygen level and inrush (e.g., trough conservator)
- Mechanical and electrical stress (e.g., short-circuit events, harmonics, system overvoltage).

Siemens offers the full range of transformer services out of one hand. Transformer Lifecycle Management™ (TLM™) includes the following:

- **Condition assessment and diagnostics**
  Provides diagnostic modules for individual transformers as well as for the assessment of complete installed fleets or transformer populations.

- **Consulting expertise and trainings**
  Comprehends engineering service as well as advice and recommendation (integrating all transformers of any age and any brand as a basis for the best decision about replacement/ extension and any related matters). Siemens TLM™ also offers a series of standardized customer trainings.

- **Maintenance and lifecycle extension**
  Are executed without service interruption and include: preventive and corrective maintenance, on-site active part drying and re-gassing, oil regeneration, life extension products, and end of life management.

- **Spare parts and accessories**
  Are available and delivered in high quality, for various transformer types and from numerous considerable vendors.

- **Repair and retrofit**
  Contains repair, overhaul, and modernization of transformers, executed on site with Siemens mobile workshops or in repair facilities worldwide.

- **Transport, installation and commissioning**
  Offers complete customer solutions, executed by Siemens technical experts and engineers.

For detailed information about particular TLM™ services, see chapter 5.13.

Fig. 10.4-1: Siemens technician working at the transformer testing laboratory

1
2
3
4
5
6
7
8
9
10
11
12
?

10.5 Monitoring, diagnostics and digital services

The goals of condition monitoring are straightforward: extended component life, meaning reduced lifecycle costs (OPEX and CAPEX), avoidance of dangerous or environmentally hazardous conditions, and avoidance of penalties by predicting and preventing equipment failures. Many forced outages are predictable, and this presents network operators with a tremendous opportunity. But while online condition monitoring has great potential, collecting data is not a value in itself. The crucial factor is using the data for higher-level analysis. Siemens leverages the "power of data" by capturing, processing and analyzing them, providing a sound basis for action, for both daily operations and long-term planning of asset performance management.

Condition monitoring and diagnostics

Customers Services provides condition monitoring and diagnostics for different assets within a substation, focusing on switchgear and transformers. Monitoring is offered as stand-alone product for single assets, as well as for Integrated Substation Condition Monitoring (ISCM) for entire substations (see next page "Asset Data Management").

Condition monitoring for high-voltage switchgear

Grounded in more than 25 years of experience, UHF partial-discharge monitoring (PDM) and gas density monitoring (GDM) offer significant insights into the condition of high-voltage gas-insulated switchgear. Gas density monitoring with Assetguard GDM provides highly accurate measurements for gas inventory purposes. It enables to minimize insulation gas emissions, which is important with respect to bonus and penalty regulations. It was designed to allow the user a greater degree of flexibility in measurements and alarms than is currently provided by gauges with contacts. The system uses SF_6 density transducers. The result is a full SF_6 inventory management system capable of providing advance warning of SF_6 leaks with high accuracy.

Siemens UHF partial-discharge monitoring Assetguard PDM was developed for gas-insulated switchgear (GIS). Assetguard PDM facilitates measurements using internal or external UHF sensors. It supports compliance with the IEC requirements for high-voltage on-site testing using partial-discharge monitoring. The UHF transducer comprises:

- UHF sensor with UHF cable
- UHF signal filtering and optical processor.

It is also possible to perform partial discharge localization with the application of a Siemens portable system Assetguard Dialoc.

Key features of the Assetguards:

Assetguard PDM (Partial Discharge Monitoring)

- Pattern recognition to determine the PD root cause
- Early detection of increasing and pending failures
- Avoidance of disruptive failures
- Reduction of HV test commissioning time
- More than 20 years of expertise Assetguard GDM (Gas Density Monitoring).

Assetguard GDM (Gas Density Monitoring)

- SF_6 inventory management for reporting of instances
- Accuracy down to 0.5 % of leakage per annum
- Bonus improvement and avoidance of penalties possible
- Automatic trend detection and prediction
- Avoidance of unexpected tripping.

In addition, Assetguard CBM monitors the proper function of circuit-breakers. Assetguard CBM can be applied for both AIS and GIS equipment. The system is highly flexible and covers a wide range of circuit-breaker monitoring functions. The circuit-breaker components that are monitored are generally customer-defined, based on key user-specific parameters, but typically as follows:

- CB mechanism pressure
- Trip and close coil currents
- Auxiliary DC supply voltage
- AC phase currents and voltages
- Auxiliary switches
- CB bay temperature.

Condition monitoring for medium-voltage switchgear

For medium-voltage switchgear, Customer Services developed a very cost-efficient, user-friendly, and robust monitoring product: Assetguard MVC. Power supply, data acquisition, fiber optic communication, data storage, and a web server is inside a central 19" sized node unit. One Assetguard MVC node unit is able to monitor up to a modularity of 6 circuit-breakers. Each additional slave node unit can host monitoring up to 54 circuit-breakers on top. Predefined or customized measuring bars are supplied to be installed at each circuit-breaker.

Condition monitoring for transformer

Siemens products and solutions for transformer monitoring range from very cost-efficient products, covering all major critical functions to more customer-specific solutions, available with the monitoring packages as part of the TLM (Transformer Lifecycle Management) solution. They can detect failures like dissolved gas in transformer oil, bushings, and tap changers. In addition, the cooling system and partial discharges can be monitored. Customer Services' condition monitoring products for transformers are available for any type of transformer. For detailed information, see chapter 5.13.

Asset data management

Asset data management for substations and enterprises helps operators translate collected online condition monitoring data into useful knowledge for their daily operations. This is achieved by integrating the monitoring solutions in a system called Integrated Substation Condition Monitoring (ISCM). This integration can occur locally in the substation, centrally for more than one substation, or a combination of the two. The ISCM central system acts as a host for all monitored substation equipment – from one asset to entire substations. Incoming data is processed for further analysis and diagnostics. Finally, ISCM provides each user with the information required for example, through a user interface. Regardless of the operator's condition monitoring expertise, the user interface offers a clear understanding of what may be wrong.

This is a key benefit of the ISCM system: Starting with a complete substation view, a problem is indicated and then assigned to the relevant asset. Experts can use the expert interface to validate the automated diagnosis or to perform a more thorough investigation. ISCM avoids overloading SCADA data networks by hosting all the data acquisition, and processing via knowledge modules. This means that it will not affect the grid operator's SCADA system while diagnosing the associated assets. In order to share useful information between the two systems, integration in SCADA is available upon demand.

Asset condition software solutions provide additional functions to ISCM-based monitoring systems. Typical functions like automated reporting (monitoring reporting tool) are available as add-ons to each system. The Siemens ISCM system provides an alignment of alarm functionalities, user administration, and web access. It contains plug-in facilities to central condition monitoring systems for obtaining remote expert advice on condition data diagnostics. In addition, an extensive set of protocols is available for further integration. Asset data management, or online condition monitoring revealing the current asset status, enables unplanned outage avoidance, the early detection of impending failure; fewer repair costs, improved availability, and a effective, cost-efficient maintenance strategy. Asset data management forms a bridge to the final step: asset performance management.

Asset management and consulting

Asset performance management provides recommendations for asset management and operation. It predicts the future behavior of assets based on dynamic online condition data combined with the renowned Siemens offering of Reliability Centered Asset Management (RCAM).

RCAM Dynamic is a decision support software tool for asset managers and operators. It combines asset data, subject matter expertise, and several years of experience in asset behavior with a cutting-edge methodology. The extremely reliable prediction of an asset's future condition allows for an optimized asset management strategy – and enhanced asset performance. With RCAM Dynamic, Siemens offers a new tool that aims to extend and maximize asset life, while at the same reducing lifecycle costs, as is often required by regulatory obligations.

RCAM Dynamic combines online condition data showing the assets' current status, offline condition data from measurements, and static data relating to the assets' past performance – like general OEM information – in dynamic models for forecasting and risk assessment. RCAM Dynamic models the impact of aging according to a set of varying condition parameters, predicting both an asset's future health and its remaining service life in an Asset Health Index calculated for every asset in a power grid. An Asset Health Index considers both online and offline condition information, and is graded and weighted according to the asset group. Risks based on current and future failure probability rates for each individual asset can be calculated. Relevant reports can be generated from all these calculations, e.g., a future risk report showing upcoming risks (probability x consequence of failure) across five dimensions: CAPEX and OPEX risks, as well as environmental, safety, and network performance risks.

The resulting asset management approach is truly comprehensive and covers the entire energy conversion chain, from generation through transmission and distribution networks to energy-intensive industries. Assets no longer need to be automatically replaced at the end of a predefined period, and the remaining service life can be calculated years ahead of time. Asset managers can use RCAM Dynamic to schedule future maintenance, prevent defects from developing into serious failures, and extend the service life of their equipment. In addition, they can base their strategic planning and their optimization of capital investments on RCAM Dynamic. The key features of RCAM Dynamic are:

- Risk forecast based on Health Index (HI) forecasting
- HI calculation based on condition parameters
- HI forecast based on aging functions per condition parameter
- Present risk calculation with HI-related outage probability
- Calculation of next maintenance, based on HI development scenarios
- Calculation of best intervention timing (replacement, refurbishment).

10.6 Service programs

Service programs serve as an umbrella spanning the entire Siemens portfolio. They are one way for system operators to ensure that they receive the best possible service. Guaranteed availability of staff and spare parts, as well as short response times can all be included.

These agreements minimize the customer's operational risk to a calculable factor by defining which individual maintenance and emergency response services will be provided. Remote services and even O&M based on KPIs can be incorporated in a service program.

With the available service programs, an exact match with the system operator requirements can be achieved in several areas: from single assets to entire networks, from preventive maintenance to remote services, and from short-term contracts to long-term agreements.

10.7 Customer support for power and energy

"Good morning, Energy Customer Support Center, Betty Smith speaking. How can I help you? – ¡Buenos días! Le atiende Pedro García. ¿En qué le puedo ayudar?" This is what customers hear when visiting the Customer Support Center based in Nuremberg, Germany. Inquiries are answered 24/7 in numerous languages by the support agents.

The Energy Customer Support Center is the central contact channel for all inquiries regarding power and energy. This has been a service of the Energy Sector to answer questions and point people in the right diirection, helping to achieve best-in-class customer satisfaction for more than 10 years.

The Customer Support Center ensures the availability of the entire Siemens Power & Energy expertise around the clock. All customer inquiries are taken according to the defined processes, entered in the Customer Support Management (CSM) tool, and forwarded to the person in charge. Inquiries are processed during the locally prevailing office hours. This ensures quick processing of all inquiries to the customer's satisfaction. Periodically conducted customer satisfaction surveys give customers the possibility for feedback, and for actively forming the process.

Fig. 10.7-1: The support agents are available for all questions in the area of power and energy

10.8 Siemens Power Academy TD

The Siemens Power Academy specializes in power supply related training for customers and Siemens employees. Training programs range from power generation to power transmission and distribution. As part of the Siemens Power Academy, the Siemens Power Academy TD trains and certifies in the area of power transmission and distribution.

The Siemens training portfolio consists of 5 main categories: primary technology, secondary technology, transmission solutions, power system planning and simulation, and power system operating.

An overview of the training portfolio is presented in table 10.8-1.

Customized training is developed and defined on demand in close cooperation with the Siemens customers.

Many subjects – even more development opportunities
The Siemens global training catalog is complete with training options for beginners and up to experts, and it demonstrates how the courses and programs can provide practice-oriented trainings as well as an organized method of development for new hires and experts. Siemens offers customer support services such as tailor-made trainings, curriculum development, as well as personalized training programs, in order to help achieve training and development objectives. In addition, the Siemens Power Academy TD also offers several curricula, featuring a logically structured series of classes that help to efficiently and systematically build up knowledge.

The right mix of theory and practice
In the Siemens Power Academy TD training program, theory and practice go hand in hand. This means that theoretical approaches are always supplemented by practical exercises on real devices and systems. To make that possible, the training centers use original components, devices and systems from the transmission and distribution product portfolio. This hands-on training principle together with small training groups guarantees a maximum learning effect.

Training portfolio of the Siemens Power Academy TD

Power System Operation
Power Control Systems, Power System Security, Operation Management

Power System Planning & Simulation
Power System Engineering, PSS®E, PSS®SINCAL

Transmission Solutions
HVDC, FACTS

Secondary Technology
Protection, Substation Automation & Information, Power Quality

Primary Technology
Medium & High Voltage Technology, Transformers

Table 10.8-1: Siemens Power Academy TD: training portfolio for transmission and distribution

1
2
3
4
5
6
7
8
9
10
11
12

Close to the customer!
With 27 locations worldwide, Siemens brings its global expertise, knowledge of products, and technology to system operators at the local level. Through this global set-up, Siemens is able to meet local requirements, for example, local specifications or native training language.

IIt is also possible to deliver almost every training course at the preferred site, or to deliver the training through modern learning concepts such as virtual training classroom. This provides a maximum of flexibility in terms of time and place. In addition, it allows shortening presence time and travel expenses, which is nowadays a key requirement.

The strength of Siemens: high flexibility and customized training

- Customers benefit from Siemens' exhaustive and comprehensive training portfolio, which covers all aspects of power transmission and distribution:
  - Training on original components, devices and systems from the transmission and distribution product portfolio.
  - Learning from industry experts.
  - Building up expertise systematically with the Siemens integrated curricula concept in three levels: Associate, Advanced, Expert.
- Training is customized by determining the contents, the product version, the date and duration of the sessions according to the customer's competence development needs.
- Transfer of newly won expertise to day-to-day work through combined technology and business learning.
- Knowledge certification.
- Individual advice to select the most appropriate training program.

Customers are invited to join the Siemens network of expertise.

For detailed information on the standardized training portfolio:
siemens.com/poweracademy

Fig.10.8-2: Global presence of Siemens Power Academy

11 Glossary

A	
Air circuit-breaker	A –> circuit-breaker in which the contacts open and close in air at atmospheric pressure.
Air-insulated outdoor switchyards of open design (AIS)	High-voltage substation where all live parts are insulated by air and are not covered. AIS are always set up in a fenced area with access for authorized personal only.
Ambient air temperature	Temperature (measured under specific conditions) of the air surrounding an item of electrical equipment. The ambient air temperature affects heat dissipation, which can make it necessary to reduce the –> rated current.
Auto-reclosing (of a mechanical switching device)	The operating sequence of a mechanical switching device whereby, following its opening, it closes automatically after a predetermined time.
Automatic multiple-shot reclosing	An automatic reclosing repeated two or three times (usually not more) if it is not successful.
B	
Backup protection	Interaction of two carefully matched overcurrent protective devices connected in series at points where, in the event of a fault, a single device is not capable of switching the prospective short-circuit current. If a correspondingly high short-circuit current occurs, the backup overcurrent protective device relieves the next downstream overcurrent protective device, thus preventing it from being overloaded.
Blackout	Complete power outage.
Breaking operation	Interruption of an electric circuit as a result of the contact members of a switching device being opened.
Breaking capacity	Highest current a switching device is capable of breaking under specific conditions.
Busbar	A low impedance conductor, to which several electric circuits can be connected separately.
Busbar trunking system	Extended enclosed busbars, equipped with tap-off points for supplying machines and other loads with power via variable tap-off units.
Bushing	Device that enables one or several conductors to pass through a partition such as a wall or a tank, and insulate the conductors from it.
C	
Capacitor voltage transformer (CVT)	A –> voltage transformer comprising a capacitor divider unit and an electromagnetic unit designed and interconnected so that the secondary voltage of the electromagnetic unit is substantially proportional to the primary voltage, and differs in phase from it by an angle which is approximately zero for an appropriate direction of the connections.
CAPEX	Capital expenditures of an enterprise for fixed assets, e.g., means of production, buildings, etc. –> OPEX.
Continuous Improvement Process (CIP)	–> Kaizen.
Circuit-breaker	A mechanical switching device, capable of making, carrying and breaking currents under normal circuit conditions and also making, carrying for a specified time, and breaking currents under specified abnormal circuit conditions such as those of short circuit.
Common Information Model (CIM)	An open standard that defines how managed elements in an IT environment are represented as a common set of objects and relationships between them. This is intended to allow consistent management of these managed elements, independent of their manufacturer or provider.
Contactor	Load breaking device with a limited short-circuit making or breaking capacity, used for high switching rates.
Continuous Function Chart (CFC)	A Siemens engineering tool that offers graphical interconnection and parameterization of off-the-shelf or user-defined function blocks to solve sophisticated continuous control applications –> SFC.
Current limiting	Ability of an overcurrent protective device (fuse or circuit-breaker) to reduce the peak current in a circuit beyond the value of the peak short-circuit current expected on the basis of the circuit constants (R, L), by opening and clearing the fault in a subcycle time frame.
Current-limiting circuit-breaker	A circuit-breaker with a break time short enough to prevent the short-circuit current reaching its otherwise attainable peak value.
Current transducer	Transducer used for the measurement of an alternating current.
Current transformer (CT)	Type of instrument transformer designed to provide a current in its secondary winding proportional to the alternating current flowing in its primary. CTs facilitate the safe measurement of large currents, often in the presence of high voltages. The current transformer safely isolates measurement and control circuitry from the high voltages typically present on the circuit being measured.
D	
DCF77	A longwave time signal and standard-frequency radio station. Every minute, the transmitted data repeats the current date and time, a leap second warning bit, a summertime bit, a primary/backup transmitter identification bit, and several parity bits. The callsign DCF77 stands for D=Deutschland (Germany), C=long wave signal, F=Frankfurt, 77=frequency: 77.5 kHz.
Dead-tank circuit-breaker	A –> circuit-breaker with interrupters in an earthed metal tank.
Design verified assembly	Assembly which fulfills the requirements of the relevant part of IEC 61439 (for low-voltage power switchgear and control gear assembly: IEC 61439-2; EN 61439-2, VDE 0660-600-2), verified by testing, calculation, physical measurement, or validation of design rules.

1
2
3
4
5
6
7
8
9
10
11
12
?

Dielectric strength	Capability of an electrical component to withstand all voltages with a specific time sequence up to the magnitude of the corresponding withstand voltages. These can be operating voltages or higher-frequency voltages caused by switching operations, earth faults (internal overvoltages), or lightning strikes (external overvoltages).
Demilitarized zone (DMZ)	A subnetwork between an organization's LAN and an external network, usually the Internet. The hosts in the DMZ contain and provide all external services of an organization such as e-mail or web server, but are not allowed to connect directly to the internal LAN.
Disconnector (isolator)	Mechanical switching device which, in the open position, disconnects all the poles of an electric circuit. Disconnectors are used for no-load closing and opening operations, e.g., to isolate downstream devices so they can be worked on.
Distributed generation units	Generation units, such as PV panels, wind turbines, or co-generation units, which are connected to the LV or MV distribution network.
E	
Ear and Mouth (E&M)	A technology in voice over IP (VoIP) that uses a traditional telephone handset with an earphone (or earpiece) for listening to incoming audio and a microphone (or mouthpiece) for transmitting audio. Calls using an E&M interface can be made from, received from, or disconnected by a private branch exchange (PBX) as well as from a VoIP-capable computer. The term ear and mouth interface is sometimes used as a synonym for a telephone handset itself, or for a headset-and-microphone combination that allows hands-free operation.
Earth fault	Occurrence of an accidental conductive path between a live conductor and the earth.
Earthing switch	Mechanical switching device for earthing parts of an electric circuit, capable of withstanding for a specified duration electric currents under abnormal conditions such as those of short circuit, but not required to carry electric current under normal conditions of the electric circuit.
ECR glass	A zero boron glass that is free of added fluorides. It conforms to ASTM D578-1999 specification for E-glass. It combines the electrical and mechanical properties of E-glass with superior inherent corrosion resistance. ECR glass fiber is an electrical grade corrosion resistant glass fiber.
F	
Feeder	An electric line originating at a main substation and supplying one or more secondary substations.
Flexible AC transmission system (FACTS)	A power-electronic based system and other static equipment that provide control of one or more AC transmission system parameters to enhance controllability and increase power transfer capability.
File transfer protocol (FTP)	Transfer protocol for exchanging files over any –> TCP/IP-based network.
Fuse	A protective device that by the fusing of one or more of its specially designed and proportioned components, opens the circuit in which it is inserted by breaking the current when this exceeds a given value for a particular period of time. The fuse comprises all the parts that form the complete device.
G	
Gas-insulated switchgear (GIS)	Indoor and outdoor switchgear of compact design and small dimensions for substations up to 550 kV to be installed in urban or industrial load centers. All components are housed in earthed metal enclosures filled with sulfur hexafluoride (SF_6) gas for insulation.
Gas-insulated transmission line (GIL)	Transmission lines composed of pipes that house conductors in highly insulative sulfur hexafluoride (SF_6) gas, which have high load-transfer capacity.
Generic Interface Definition (GID)	A set of common services used for enterprise integration in the utility industry, defined in IEC standard IEC 61970.
General Packet Radio Service (GPRS)	A packet-oriented mobile data service available to users of –> GSM.
Grid-connected photovoltaic system	A photovoltaic system in which the photovoltaic array acts like a central generating plant, supplying power to the grid.
Grid Power Flow Controller (GPFC)	A concept in system technology within the –> FACTS family of devices that provides an economic solution for the purpose of power transmission between two or more adjacent AC systems. The AC systems can be either synchronous or non-synchronous. The most proper power rating is between 10 MW and 300 MW, although higher ratings are also achievable.
GSM (French: Groupe Spécial Mobile)	A worldwide standard for mobile phones.
H	
Harmonics	The sinusoidal (harmonic) oscillations in the Fourier analysis of non-sinusoidal, periodic oscillations that oscillate at a frequency which is an integer multiple of the fundamental (= system) frequency. The amplitudes of harmonics are considerably smaller than the fundamental frequency.
High voltage	In general a set of voltage levels in excess of –> low voltage (< 1 kV). In a more restrictive sense HV is used for voltage levels typically used for bulk transmission of electricity (> 60 kV).
HTTP/HTTPS	The hypertext transfer protocol/hypertext transfer protocol secure is a communications protocol for the transfer of information on the Intranet and the World Wide Web; HTTPS is widely used for security-sensitive communication.
I	
Incoming feeder	In a substation, a feeder bay which is normally used to receive power from the system.
Instrument transformer	Transform high currents and voltages into small current or voltage values for measuring or protection purposes.

1
2
3
4
5
6
7
8
9
10
11
12
?

Inter-Control Center Communications Protocol (ICCP)	The Inter-Control Center Communications Protocol (ICCP or IEC 60870-6/TASE.2) is being specified by utility organizations throughout the world to provide data exchange over wide area networks (WANs) between utility control centers, utilities, power pools, regional control centers, and non-utility generators.
Insulated gate bipolar transistor (IGBT)	A three-terminal power semiconductor device, noted for high efficiency and fast switching.
Inter-Range Istrumentation Group time codes (IRIG)	Family of standardized timecodes used by the U.S. Government and the private industry for the correlation of data and time.
IT system	Isolated power supply system that does not provide a direct connection between live conductors and earthed parts; exposed conductive parts are earthed.
J	
K	
Kaizen	A Japanese philosophy that focuses on continuous improvement throughout all aspects of life, which was first implemented in several Japanese businesses as a management strategy after World War II, adopted to businesses throughout the world also as Continuous Improvement Process (CIP).
Konnex (KNX)	Standardized bus system for home and building applications according to EN 50090 and ISO/IEC 14543, comprising switching, signaling, controlling, monitoring, and indicating functions in the electrical installation.
L	
Link Capacity Adjustment Scheme (LCAS)	A method to dynamically increase or decrease the bandwidth of virtual concatenated containers to effectively transfer asynchronous data streams over –> SDH.
Live-tank circuit-breaker	A –> circuit-breaker with interrupters in a tank insulated from earth.
Low voltage (LV)	Set of voltage levels used for the distribution of energy up to 1,000 V AC, or 1,200 V DC.
L-tripping	Overload protection.
M	
Miniature circuit-breaker (MCB)	Automatically-operated low-voltage switching device designed to protect an electrical circuit from overload or short-circuit. Also used to manually connect or disconnect an electric circuit at will. Rated current not more than 125 A.
Molded-case circuit-breaker (MCCB)	A circuit-breaker having a supporting housing of molded insulating material forming an integral part of the circuit-breaker.
Medium voltage (MV)	Set of voltage levels lying between –> low voltage (LV) and –> high voltage (HV). The boundaries between HV and LV depend on local circumstances and history or common usage. The band 1kV to 52 kV is commonly accepted in Europe. The term medium voltage is neither used in the U.K. nor in Australia.
Metal-oxide varistor (MOV)	A discrete electronic component that is commonly used to divert excessive current to the ground and/or neutral lines.
N	
Neutral conductor (N)	A conductor connected to the neutral point of a system, which is suitable for transmitting electrical energy.
N-tripping	Neutral conductor protection.
O	
Open Access Same Time Information System (OASIS)	System for reserving transmission capacities in the US power transmission networks.
Open DataBase Connectivity (ODBC)	Standard database access method for using database management systems.
Object Linking and Embedding (OLE)	A technology that allows embedding and linking to documents and other objects developed by Microsoft.
Object Linking and Embedding for Process Control (OPC)	A set of connectivity standards for industrial automation from the OPC foundation, which offers interoperability between gauges, databases, Programmable Logic Controllers (PLCs), Distributed Control Systems (DCSs), and Remote Terminal Units (RTUs).
Operating voltage (in a system)	The value of the voltage under normal conditions, at a given instant and a given point of the system.
Operational expenditure (OPEX)	On-going cost for running a product, business or system.
OSCOP® P	A PC program for retrieving and processing of records made with the SIMEAS R digital fault and power quality recorder, the SIMEAS Q power quality recorder, or with numerical protection relays using the IEC 60870-5-103 protocol.
Open Systems Interconnection Basic Reference Model (OSI)	A layered, abstract description for communications and computer network protocol design.
Outgoing feeder	A feeder bay in a substation which is normally used to transmit power to the system.
Overcurrent	Any current in an electric circuit that exceeds the –> rated current.
Overload	Operating conditions in an electrically sound, fault-free electric circuit that give rise to an –> overcurrent.
P	
Private Automatic Branch Exchange (PABX)	A telephone exchange that serves a particular business or office, as opposed to one that a common carrier or telephone company operates for many businesses or for the general public.
Pulse-code modulation (PCM)	A digital representation of an analog signal where the magnitude of the signal is sampled regularly at uniform intervals, then quantized to a series of symbols in a numeric (usually binary) code.
Plesiochrone digital hierarchy (PDH)	An international multiplexing standard.

1
2
3
4
5
6
7
8
9
10
11
12
?

PE conductor	Conductor provided for purposes of safety, for example protection against electric shock. In an electrical installation, the conductor identified PE is normally also considered as protective earthing conductor.
Phase-shifting transformer	A device for controlling the power flow through specific lines in a complex power transmission network.
(Photovoltaik) peak watt	Maximum "rated" output of a photovoltaic cell, module, or system. Typical rating conditions are 1000 W/m^2 of sunlight, 20 ºC ambient air temperature and 1 m/s wind speed.
PEN (conductor)	Combined –> PE and –> N conductor.
Power line carrier (PLC)	A device for producing radio-frequency power for transmission on power lines.
Potential transformer (PT)	A device required to provide accurate voltages for meters used for billing industrial customers or utility companies.
Python	A dynamic object-oriented programming language.
Q	
R	
Rated breaking capacity	Value of the short-circuit current a switching device is capable of breaking at the rated operating voltage, rated frequency, and specified power factor (or specified time constant).
Rated breaking current	The load breaking current in normal operation.
Rated current	The current that an electrical device can carry, under specified conditions, without resulting in overheating or mechanical overstress.
Rated insulation level	The –> dielectric strength from phase to earth, between phases and across the open contact gap, or across the isolating distance. The dielectric strength is verified by a lightning impulse withstand voltage test with the standard impulse wave of 1.2 / 50 s and a power-frequency withstand voltage test (50 Hz/1 min).
Rated peak withstand current	The peak value of the major loop of the short-circuit current during a compensation process after the beginning of the current flow, which the device can carry in closed state.
Rated short-circuit breaking current	The root-mean-square value of the breaking current in case of short circuit at the terminals of the switching device.
Rated short-circuit making current	The peak value of the making current in case of short circuit at the terminals of the switching device.
Rated voltage	The maximum voltage at which an electric component can operate for extended periods without undue degradation or safety hazard.
Release (of a mechanical switching device)	A device, mechanically connected to a mechanical switching device, which releases the holding means and permits the opening or the closing of the switching device.
Residual current	The sum of the instantaneous values of all currents that flow through all the active conductors of an electrical system at one point.
Residual-current device (RCB)	A mechanical switching device designed to make, carry and break currents under normal service conditions and to cause the opening of the contacts when the residual current attains a given value under specified conditions.
Ring-main unit (RMU)	Switchgear in distribution systems comprising of switches for switching power cable rings and of switches in series with fuses for the protection of distribution transformers.
Rapid Spanning Tree Protocol (RSTP)	Networking protocol according to IEEE 802.1w to deactivate redundant paths in a local network or to activate them if required (e.g., in case of a failure of a switch, bridge, etc.).
Resistance temperature device/ detector (RTD)	Device for temperature detection based on the resistance change in a metal, with the resistance rising more or less linearly with temperature.
Remote terminal unit (RTU)	An electronic device to transmit data to a distributed control system or a SCADA system and to alter the state of connected objects based on control messages received from the system.
S	
Switch-disconnector	A switch which, in the open position, satisfies the isolating requirements specified for a disconnector.
Switch-disconnector/ fuse (SDF)	A switch-disconnector comprising a –> switch-disconnector and (connected in series zo this) fusebases for insertign fuse-links.
Synchronous Digital Hierarchy (SDH)	A multiplexing protocol for transferring multiple bit streams over the same optical fiber.
Selectivity	Combined operation of overcurrent protective devices connnected in series to provide graded disconnection.
Series reactor	A reactor intended for series connection in a network, either for limiting the current under fault conditions or for load sharing in parallel circuits.
Sequential Function Chart (SFC)	A graphical programming language used for PLCs. It is one of the five languages defined by IEC 61131-3 standard. The SFC standard is defined in IEC 848, "Preparation of function charts for control systems".
Short circuit	Connection of two or more points of an electrical circuit that are meant to be at different voltages across a nebligible small resistance or impedance.
Short-circuit current	Overcurrent which flows through the –> short circuit which may result in thermal or mechanical overloading of the electrical equipment.
Short-circuit strength	The mechanical resistance of switching devices to short-circuit stress, particularily of busbars in switchgear assemblies and distribution boards.
Shunt release	A release energized by a source of voltage.
Shunt reactor	A reactor intended for shunt connection in a network to compensate for capacitive current.
Single-line diagram (SLD)	A simplified notation for representing a three-phase power system in which the polyphase links are represented by their equivalent single line.

Smart Grid	Evolving intelligent power distribution network using communication, advanced sensors, and distributed computers to improve the efficiency, reliability and safety of power delivery and use. It includes the possibility for demand side management, facilitating grid connection of distributed generation power (with photovoltaic arrays, small wind turbines, micro hydro, or even combined heat power generators in buildings), grid energy storage for distributed generation load balancing, and improved reliability against many different component failure scenarios.
SNCP	A protection mechanism used in –> SDH
Simple Network Management Protocol (SNMP)	SNMP is used in network management systems to monitor network-attached devices for conditions that warrant administrative attention. It consists of a set of standards for network management, including an application layer protocol, a database schema, and a set of data objects.
SOAP	A protocol for exchanging –> XML-based messages over computer networks, normally using –> HTTP/HTTPS. Formerly SOAP was an acronym for Simple Object Access Protocol, which was dropped with Version 1.2.
Synchronous Optical Network (SONET)	Multiplexing protocol for transferring multiple bit streams over the same optical fiber.
Structured Query Language (SQL)	Database computer language designed for the retrieval and management of data in relational database management systems.
Synchronous Transport Module (STM)	The basic unit of framing in –> SDH.
S-tripping	Short-time delay short-circuit protection.
Substation	A part of an electrical system, confined to a given area, mainly including ends of transmission or distribution lines, electrical switchgear and controlgear, buildings and transformers. A substation generally includes safety or control devices (for example, protection).
Surge arrester	A device designed to protect the electrical apparatus from high transient overvoltages caused by lightning strikes or switching operations.
Switch / switching device	Device for making or breaking a current in an electric circuit.
Switch-disconnector	A switch which, in the open position, satisfies the isolating requirements specified for a –> disconnector.
T	
Total harmonic distortion (THD)	The THD of a signal is a measurement of the harmonic distortion present, and is defined as the ratio of the sum of the powers of all harmonic components to the power of the fundamental frequency.

TN-S, TN-C, TN-C-S systems	Power supply systems; in the TN-S system the neutral conductor and the protective-earth-conductor-function is separated throughout the system; in the TN-C system neutral-conductor and protective-earth-conductor-function are combined throughout the system; the TN-C-S system is a combination of a TN-C and a TN-S system. In one part of the system neutral-conductor and protective-earth-conductor function are combined, in another part, they are separate.
Total harmonic distortion (THD)	The THD of a signal is a measurement of the harmonic distortion present and is defined as the ratio of the sum of the powers of all harmonic components to the power of the fundamental frequency.
Transformer substation	A substation containing power transformers interconnecting two or more networks of different voltages.
Transient overvoltage	Very short duration increase in voltage between two or more conductors. Transient overvoltages are mainly caused by the secondary effects of lightning or by electrical switching events, and may cause serious damages to components of the electrical supply network.
Tripping current	Current value at which a tripping element trips within a particular time.
TT system	Power supply system; in the TT system one point is directly grounded, all exposed conductive parts are connected to grounding electrodes which are separated from the system grounding.
U	
Universal Mobile Telecommunications System (UMTS)	Third-generation cell phone standard that allows significantly higher data transfer rates than GSM.
Universal Serial Bus (USB)	Serial bus standard to interface devices.
V	
Virtual power plant (VPP)	A cluster of distributed generation installations which are collectively run by a central control entity. The concerted operational mode shall result in an extra benefit as to deliver peak load electricity or balancing power at short notice.
Visual Basic for Applications (VBA)	An event-driven programming language and associated Integrated Development Environment (IDE) which is built into most Microsoft Office applications.
Voltage divider	Device comprising resistors, inductors, capacitors, transformer(s), or a combination of these components such that, between two points of the device, a desired fraction of the voltage applied to the device as a whole can be obtained.
(Line) voltage drop	The difference at a given instant between the voltages measured at two given points along a line.
Voltage regulator	A tapped step autotransformer used to maintain a desired voltage level all the time.

Voltage surge	A transient voltage wave propagating along a line or a circuit and characterized by a rapid increase followed by a slower decrease of the voltage.
Voltage transducer	Transducer used for the measurement of an alternating voltage.
Voltage transformer	An instrument transformer in which the secondary voltage, in normal conditions of use, is substantially proportional to the primary voltage, and differs in phase from it by an angle which is approximately zero for an appropriate direction of the connections.
W	
Wavelength Division Multiplexing (WDM)	Technology which multiplexes multiple optical carrier signals on a single optical fiber by using different wavelengths (colours) of laser light to carry different signals .
Wireless Broadband (WiBro)	South-Korean service name for the international standard IEEE 802.16e (mobile WiMAX).
Worldwide Interoperability for Microwave Access (WiMAX)	A wireless broadband telecommunications technology based on the IEEE 802.16 standard.
X	
Extensible Markup Language (XML)	Markup language to faciliate the sharing of structured data across different information systems; it is used both to encode documents and to serialize data.
Y	
Z	

12 Abbreviations, trademarks

12.1 Abbreviations 560

12.2 Trademarks 567

12.1 Abbreviations

A	
AAC	All-Aluminum Conductor
AC	Alternating Current
ACB	Air Circuit-Breaker
ACE	Area Control Error
ACSR	Aluminum Conductor, Steel-Reinforced
ACT	Amorphous Core Transformer
AD	Active Directory
ADC	Analog-to-Digital Converter
ADM	a) Asynchronous Digital Multiplexer b) Advanced Device Management
ADMS	Advanced Distribution Management System
AF	Air-Forced
AFDD	Arc Fault Detection Devices
aFRR	automatic Frequency Restoration Reserve
AFWF	Air-Forced/Water-Forced (transformer cooling)
AGC	Automatic Generation Control
AIS	a) Air-Insulated Switchyard (HV) b) Air-Insulated Switchgear (MV)
Al	Aluminum
AMI	Advanced Metering Infrastructure
AMIS	Automated Consumption Data Acquisition and Information System
AMP	Asset Management Programs
AMR	Adaptive Multi-Rate
AN	Air-Natural (transformer cooling)
ANM	Active Network Management
ANOP	Advanced Network Operation
ANSI	American National Standards Institute
AR	Auto-Reclosure
ASC	Arc Suppression Coil
ASCII	American Standard Code for Information Interchange
ASTM	American Society for Testing and Materials
ATEX	(French: ATmosphères Explosibles) Explosive atmospheres
ATM	Asynchronous Transfer Mode
ATM-IMA	Inverse Multiplexing over ATM
AVR	Automatic Voltage Regulator
B	
B2B	a) Building-to-Building b) Business-to-Business
BCU	Bay Control Unit
BB	Busbar
BDEW	German: Bundesverband der Energie- und Wasserwirtschaft (German Association of Energy and Water Industries)
BESS	Battery Energy Storage System
BF	Breaker Failure
BFI	Breaker Failure Initiation
BFT	Breaker Failure Tripping
BI	Business Intelligence
BIL	Basic Impulse Level
BIPV	Building-Integrated Photovoltaic System
BMS	Battery Management System
BOSL	Block-Oriented Simulation Language
BPL	Broadband over Power Lines
BS	British Standard
BTS	Busbar Trunking System
C	
CA	Contingency Analysis
CAD/CAE	Computer-Aided Design /Computer-Aided Engineering
Califex	Cable Life Extension
CAM	Condition Assessment Monitor
CAPEX	Capital Expenditure
CB	Circuit-Breaker
CBM	a) Condition-Based Maintenance b) Circuit-Breaker Monitoring
CC	Coupling Capacitors
CCS	a) Cubicle for Customized Solutions b) Current Control System
CCTV	Closed Circuit Television
CERT	Computer Emergency Response Team
CFC	Continuous Function Chart
CFE	Communication Front End
CHP	Combined Heat and Power
CIM	Common Information Model
CIP	a) Continuous Improvement Process b) Critical Infrastructure Protection
CIS	Customer Information System
CIT	Combined Instrument Transformer
CLI	Command Line Interface
CM	a) Condition Monitoring b) Crew Management
CMMI	Capability Maturity Model Integration
CMS	Crew Management System
CO_2	Carbon dioxide
CP	Control Program
CPR	Capacitor Filter Protection Relay
CPU	Central Processing Unit
CS	a) Compact Switchgear b) Contingency Screening
CSA	Canadian Standards Association
CSM	Customer Support Center
CSV	Comma-Separated Values
CT	Current Transformer
CTDim	Current Transformer Dimensioning
Cu	Copper
CVA	Cyber Vulnerability Assessment
CVT	Capacitor Voltage Transformer
D	
DAC	Digital-to-Analog Converter
DA-RTU	Distribution Automation Remote Terminal Unit
DAS	Dynamic Security Assessment
DAU	Data Acquisition Unit

DC	Direct Current
DC CS	Direct-Current Compact Switchgear
DC CTL (45)	Direct-Current Compact Transmission Lines
DCA	Distribution Contingency Analysis
DCB	Disconnecting Circuit-Breaker
DCF	Discounted Cash Flow
DCS	Distributed Control System
DDS	Data Delivery Service
DEMS	Decentralized Energy Management System
DER	Distributed Energy Resources
DG	Distributed Generation
DGA	Dissolved Gas in Oil Analysis
DIAG	Diagnosis
DIE	Integrated Development Environment
DIN	German: Deutsches Institut für Normung e. V. (German Institute for Standardization)
DINEMO	Digital Network Model
DIP	Distributed Interface Processor
DisCo	Distribution Company
DL	Chinese department for electrical power
DLF	Distribution Load Forecast
DMAIC	Define-Measure-Analyse-Improve-Control
DMS	Distribution Management System
DMZ	Demilitarized Zone
DN	Damping Network
DNA	Distribution Network Applications
DNP	Distributed Network Protocol
DP	Decentralized Peripherals
DPF	Dispatcher Power Flow
DQS	German: Deutsche Gesellschaft zur Zertifizierung von Managementsystemen (German Association for Certification of Management Systems)
DR	Demand Response
DRMS	Demand Response Management System
DSA	1) Dynamic Stability Analysis 2) Dynamic Security Assessment
DSL	Digital Subscriber Line
DSO	Distribution System Operator
DSPF	Distribution System Power Flow
DSSE	Distribution System State Estimator
DT	Distribution Transformer
DTC	Dead-Tank Compact
DUPS	Dynamic Uninterruptible Power Supply
DVD	Digital Versatile Disc
DVRM	Data Visualization and Reporting Module
E	
E&M interface	Ear and Mouth interface
EA	Energy Accounting
EAF	Electric Arc Furnace
ECANSE	Environment for Computer-Aided Neural Software
ECR (glass fiber)	Electrical Grade Corrosion Resistant (glass fiber)
ED	Economic Dispatch
EDP	Electronic Data Processing
EEA	European Economic Area
EEX	European Energy Exchange
EHS	Environment, Health and Safety
EHV	Extra High Voltage
EIB	European Installation Bus
EIRP	Effective Isotropic Radiated Power
ELC	ELCOM Communication Protocol
ELCOM	Electricity Utilities Communication
EM	Environmental Management
EMC	Electromagnetic Compatibility
EMF	Electromagnetc Fields
EMM	Energy Market Management
EMS	Energy Management System
EMU	Electric Multiple Units
EN	European Standard (German: Europa-Norm)
ENEAS	Efficient Network and Energy Automation Systems
Engineering	Engineering
EPC	Engineering, Procurement, Construction (contract)
EPR	Ethylene Propylene Rubber
EPRI	Electric Power Research Institute
EPROM	Erasable Programmable Read-only-Memory
ERIP	Epoxy-Resin Impregnated Paper
ETSI	European Telecommunications Standards Institute
ETU	Electronic Trip Unit
EU	European Union
EV	Electric Vehicle
F	
F	Front
FA	Forecasting Applications
FACTS	Flexible AC Transmission System
FAN	File Area Network
FASE	Feeder Automation Sequence Editor
FAT	Factory Acceptance Test
FB	Full Bridge
FC	Fault Calculation
FCG	Fault Collector Gateway
FCITC	First Contingency Incremental Transfer Capability
FCM	Feeder Condition Monitor
FCR	Frequency Containment Reserve
FDR	Frequency Domain Reflectometry
FDS	Frequency Domain Spectroscopy
Fe	Iron
FEM	Finite Element Method
FERC	Federal Energy Regulatory Commission
FHSS	Frequency-Hopping Spread Spectrum
FISR	Fault Isolation and Service Restoration
FLISR	Fault Location, Isolation and Service Restoration
FLOC	Fault Location
FMS	Fieldbus Message Specification
FO	Fiber Optic
FPI	Fault Passage Indicator

1
2
3
4
5
6
7
8
9
10
11
12

FR	Filter Reactor
FRA	Frequency Response Analysis
FRP	a) Fiber-Glass Reinforced Polyester b) Fiber-Reinforced Plastic
FRR	Frequency Restoration Reserve
FSC	Fixed Series Capacitor
FSI	Fault Sensor Indicator
FTP	File Transfer Protocol
FXO	Foreign eXchange Office
FXS	Foreign eXchange Subscriber
G	
G&T	Generation and Transmission
GA	Generator connection cabinet
GDM	Gas Density Monitoring
GB	a) Guobiao (Chinese standard) b) Great Britain c) GigaByte
GenCo	Generation Company
GFP	Generic Framing Procedure
GIC	Geomagnetic Induced Currents
GID	Generic Interface Definition
GIF	German: Gasisolierter Stromwandler Freiluft) Gas-insulated outdoor current transformer, make Ritz
GIL	Gas-Insulated Transmission Line
GIS	a) Geographical Information System b) Gas-Insulated Switchgear
GMB	Graphical Model Builder
GMS	Generation Management System
GOOSE	Generic Object Oriented Substation Event
GOST	Gossudarstwenny Standart (Russian standard)
GPFC	Grid Power Flow Controller
GPRS	General Packet Radio Service
GPS	a) General Power Supply b) Global Positioning System
GSM	French: groupe spécial mobile (Global System for Mobile Communications)
GSU	Generator Step-up Transformer
G-tripping	Ground-Fault Tripping
GUI	Graphical User Interface
H	
HAN	Home Area Network
HB	Half Bridge
HDPE	High-Density Polyethylene
HEP	Head End Power
HES	Head-End System
HF	High Frequency
HI	Health Index
HIGS	Highly Integrated Generator Switchgear
HIS	a) Highly Integrated Switchgear b) Historical Information System
HMI	Human-Machine
HPP	Hydroelectric Power Plant
HQ	Headquarters
HRC fuse	High-Rupturing-Capacity fuse
HSB	High-Speed Bus
HSR	High-Availability Seamless Redundancy Protocol
HSSE	Health, Safety, Security and Environment
HTC	Hydro-Thermal Coordination
HTTP/HTTPS	Hypertext Transfer Protocol / Hypertext Transfer Protocol Secure
HTV	High Temperature Vulcanizing (silicone rubber)
HV	High Voltage
HVAC	Heating, Ventilation and Air Conditioning
HVDC	High-Voltage Direct Current
HVDCT	High-Voltage Direct-Current Transmission
HW	Hardware
I	
IAC	Internal Arc Classification
IAP	Intelligent Alarm Processor
ICCP	Inter-Control-Center Communication Protocol
IDS	Intrusion Detection System
IEC	International Electrotechnical Commission
IED	Intelligent Electronic Device
IEEE	Institute of Electrical and Electronics Engineers
IFS	Independent Front-End System
IGBT	Insulated Gate Bipolar Transistor
ILSA	Industrial Link State Advertisement (protocol)
IMM	Information Model Manager/Management
IO	Input/Output
IOP	Interoperability
IoT	Internet of Things
IP	Internet Protocol
IP code	Ingress Protection (code)
IPO	Input-Process-Output
IPP	Independent Power Provider
IRIG time codes	Inter-Range Instrumentation Group time codes
ISCM	a) Integrated Substation Condition Monitoring b) Integrated Services and Support Condition Monitoring
ISDN	Integrated Services Digital Network
ISO	a) International Organization for Standardization b) Independent System Operator
IT	Information Technology
I-tripping	Instantaneous short-circuit protection
IVR	Interactive Voice Response
J	
jDBC	Java Database Connectivity
K	
KNX	Konnex
KPI	Key Performance Indicators
L	
L	Lateral
LAN	Local Area Network
LCAS	Link Capacity Adjustment Scheme
LCC	Line Commutated Converter
LCD	Liquid Crystal Display

LCT	Local Craft Terminal
LDAP	Lightweight Directory Access ProtocoL
LED	Light Emitting Diode
LF	Ladle Furnace
LFC	Load Frequency Control
LI	Lightning Impulse
LiDT	Liquid-immersed Distribution Transformer
LIRA	Line Resonance Analysis
LME	Load Management Electricity
LMG	Load Management Gas
LMW	Load Management Water
LoWPAN	Low-rate Wireless Personal Area Network
LPVTG	Low-Power Voltage Transducer for Medium-Voltage GIS systems
LS	Load Shedding
LSA	(German: Leittechnik für Schaltanlagen) Substation automation system
LSC	a) Load Shedding Controller b) Loss of Service Continuity
LTE	Long Term Evolution
LTLF	Long-Term Load Forecast
LTM	Long-Term Maintenance
LTT	Light-Triggered Thyristors
LV	Low Voltage
LVMD	Low-Voltage Main Distribution
M	
MBR	Management Business Review
MCB	Miniature Circuit-Breaker
MCC	Motor Control Center
MCCB	Molded-Case Circuit-Breaker
MD	Main Distribution
MDM	a) Master Data Management b) Meter Data Management
MDMS	Meter Data Management System
MECE	Mutually Exclusive and Collectively Exhaustive
MedEvac	Medical Evacuation
MERO	Multi-Energy Resource Optimization
MFC	Microsoft Foundation Class
mFRR	manual Frequency Restoration Reserve
MMC	Modular Multilevel Converter
MMS	Module Management System
MMU	Measurement and Monitoring Unit
MO	Metal Oxide
MOD	Model on Demand
Modbus	Modicon bus
MOV	Metal-Oxide Varistor
MoW	Master of Waves
MPCB	Motor Protection Circuit-Breaker
MPDSL	Maximum Permissible Dynamic Service Load
MPLS	Multi-Protocol Label Switching
MPLS-TP	Multi-Protocol Label Switching - Transport Profile
MPM	Multi-Project Management
MPSL	Maximum Permissible Service Load

MSC	Mechanically Switched Capacitor
MSCDN	Mechanically Switched Capacitor Bank with Damping Network
MSP	Motor Starter Protector
MSPP	Multi-Service Provisioning Platform
MSR	Mechanically Switched Reactor
MS-SPRing (2F-)	(2-Fiber) Multiplex Section-Shared Protection Ring
MTBF	Meantime Between Failures
MTLF	Medium-Term Load Forecast
MTM	Market Transaction Management
MU	Model Update
MUDR	Metered Usage Data Repository
MUST	Managing and Utilizing System Transmission
MUX	Multiplexer
MV	Medium Voltage
MVC	Medium-Voltage Condition Monitoring
MWFM	Mobile Workforce Management
N	
N conductor	Neutral conductor
N_2	Nitrogen
NAN	Near-me Area Network
NEMA	National Electrical Manufacturers Association
NERC	North American Electric Reliability Corporation
NETOMAC	Network Torsion Machine Control
NEVA	Eigenvalue and Modal Analysis
NG	Next Generation
NIP	Network Interface Processor
NIST	National Institute of Science and Technology
NLTC	No-Load Tap Changer
NMS	Network Management System
NMU	Network Model Update
NPA	Network Parameter Adaptation
NS	Network Sensitivity
NTL	Non-Technical Loss
NTP	Network Time Protocol
N-tripping	Neutral Conductor Protection
O	
O&M	Operation and Maintenance
OASIS	Open Access Same Time Information System
OCT	Optical Current Transformer
OCTC	Off Circuit Tap Changer
ODB	Operation Database
ODBC	Open Database Connectivity
ODMS	a) Operational Database Maintenance System b) Operational Data Management System
OEM	Original Equipment Manufacturer
OFDM	Orthogonal Frequency-Division Multiplexing
OFR	Optimal Feeder Reconfiguration
OHL	Overhead Line
OIP	a) Oil-Impregnated Paper b) Oil-Impregnated Paper Bushing
OLE	Object Linking and Embedding

OLTC	On-Load Tap Changer
OM	Outage Management
OMS	Outage Management System
ONAF	Oil-Natural/Air-Forced
ONAN	Oil-Natural/Air-Natural
OPC	Object Linking and Embedding for Process Control
OPEX	Operational Expenditure
OPF	Optimal Power Flow
OPGW	Optical Ground Wire
OSI	Open Systems Interconnection Basic Reference Model
OT	Operational Technology
OTM	Offshore Transformer Module
OTS	Operator Training Simulator
P	
P	Power Meter
PA	Power Applications
PABX	Private Automatic Branch Exchange
PAS	Power Automation System
PBX	Private Branch Exchange
PC	Personal Computer
PCI	Peripherical Component Interconnect
PCM	a) Production Cost Monitoring b) Pulse code modulation
PD	Partial Discharge
PDC	a) Polarization and Depolarization Current b) Phasor Data Concentrator"
PDH	Plesiochrone Digital Hierarchy (international multiplexing standard)
PDM	Partial Discharge Monitoring
PDMS	Protection Device Management System
PDP	Phasor Data Processor
PE	a) Polyethylene b) Protective Earthing
PEHLA	German: Prüfung elektrischer Hochleistungsapparate (Association of Owners of High-Power Testing Laboratories in Germany and Switzerland)
PEN	Combined PE and N conductor
PI	Polarization Index
PLC	a) Power-Line Carrier b) Programmable Logic Controller
PM	Partition of Metal
PMBOK	Project Management Body of Knowledge
PMI	Planned Maintenance and Inspection
PMU	Phasor Measurement Unit
POD	Power Oscillation Damping
POI	Point of Interconnection
POTT	Permissive Overreach Transfer Trip
POTS	Plain Old Telephone Service
PP	Polypropylene
PQ	Power Quality
PQS	(German: Power Quality Störschreiber) Power Quality Measurement
PROFIBUS	Process Fieldbus
PROFINET	Process Field Network
PRP	Parallel Redundancy Protocol
PSA	Protection Security Assessment
PSS	Power System Simulator
PSCAD	Power Systems Power Systems Computer-Aided Design
PST	Phase-Shifting Transformer
PT	Potential Transformer
PTC	Positive Temperature Coefficient
PTI	Power Technologies International
PTL	Power Transmission Lines
PUTT	Permissive Underreach Transfer Trip
PV	Photovoltaics
PV/QV	Power/Voltage VAr/Voltage
PVC	Polyvinyl Chloride
Q	
QM	Quality Management
R	
R	Rear
R&D	Research and Development
RAV	Advanced Results Visualization
RBAC	Role Based Access ControL
RBM	Rehabilitation Based Maintenance
RC	Resistive/Capacitive
RCAM	Reliability-Centered Asset Management
RCD	Residual-Current Protective Device
RCVT	Resistive Capacitive Voltage Transformer
RD	Remedial Dispatch
RDBMS	Relational Database Management System
RDC	Remote Diagnostic Center
RDF	Resource Description Framework
REG	Regulation
RES	Renewable Energy Sources
RF	Radio Frequency
RFC	Remote Function Call
RIP	Resin-Impregnated Paper Bushing
RIS	Resin-Impregnated Synthetic Bushing
RM	Reserve Monitoring
RMS	Root-mean-square (also rms, r.m.s.)
RMU	Ring-Main Unit
RO	a) Resource Optimization b) Resource Scheduler
ROI	Return on Investment
ROS	Remote Operational Support
ROV	Remotely Operated Vehicle
RPS	Redundant Power Supply
RSTP	Rapid Spanning Tree Protocol
RTC	Real-Time Clock
RTD	Resistance Temperature Device/Detector
RTO	Regional Transmission Operator
RTU	Remote Terminal Unit
S	
SA	a) Scheduling Applications b) Security Analysis

SABS	South African Bureau of Standards
SAIDI	System Average Interruption Duration Index
SAIFI	System Average Interruption Frequency Index
SAS	Substation Automation System
SAT	Site Acceptance Test
SCADA	Supervisory Control and Data Acquisition
SCC	a) Safety Certificate Contractor b) Short-Circuit Calculation c) Substation Control Center
SCCL	Short-Circuit Current Limiter
SCL	Structured Control Language
SCU	System Control Unit
SCUC	Security Constrained Unit Commitment
SD	Switch-Disconnector
SDF	Switch-Disconnector/Fuse
SDH	Synchronous Digital Hierarchy
SE	State Estimator
SF_6	Sulphur Hexafluoride
SFC	Sequential Function Chart
SGEM	Smart Grid Energy Manager
SiC	Silicon Carbide
SIEM	Security Information and Event Management
Siemens PTI	Siemens Power Technologies International
SIM	Serial Module Interface
SINCAL	Siemens Network Calculation
SIP	Serial Interface Processor
SIPLINK	Siemens Multifunctional Power Link
SL	Security Analysis Look-Ahead
SLD	Single-Line Diagram
SMS	Short Message Service
SNCP	Subnetwork Connection Protection
SNMP	Simple Network Management Protocol
SNTP	Simple Network Time Protocol
SOA	Service-Oriented Architecture
SOE	Sequence of Events
SONET	Synchronous Optical Network
SPM	Switching Procedure Management
SPS	Safety Power Supply
SQL	Structured Query Language
SSPS	Strategic Spare Part Solution
SSR	Subsynchronous Resonance
SSTI	Subsynchronous Torsional Interaction
STATCOM	Static Synchronous Compensator
STIF	Short-Term Inflow Forecast
STL	Short-Circuit Testing Liaison
STLF	Short-Term Load Forecast
STM	Synchronous Transport Module
S-tripping	Short-time delay short-circuit protection
SVC	Static VAr Compensator
SVG	Scalable Vector Graphics
SW	Software
T	
T	Transducer
TAI	Technical Applications Integration
TASE	Telecontrol Application Service Element
TBM	Time-Based Maintenance
TCM	Trouble Call Management
TCP	Transmission Control Protocol
TCP/IP	Transmission Control Protocol / Internet Protocol
TCR	Thyristor-Controlled Shunt Reactor
TCS	Trouble Call System
TCSC	Thyristor Controlled Series Capacitor
TDC	Technology and Drive Control
TDM	Time-Division Multiplexing
TDSP	Transmission Distribution Service Provider
THD	Total Harmonic Distortion
TLM	Transformer Lifecycle Management
TM	a) Terminal Module b) Thermal-Magnetic
TNA	Transmission Network Applications
TOS	Trade Optimizing Scheduler
TOU	Time of Use
TPSC	Thyristor-Protected Series Capacitor
TransCo	Transmission Company
TRV	Transient Recovery Voltage
TS	Training Simulator
TSC	Thyristor-Switched Capacitor
TSO	Transmission System Operator
TSR	Thyristor-Switched Reactor
TSSC	Thyristor-Switched Series Capacitor
TTA	Type-Tested Low-Voltage Switchgear Assembly
TU	Transport Unit
U	
UCTE	Union for the Coordination of Transmission of Energy
UHF	Ultra High Frequency
UHV DC	Ultra-High-Voltage Direct Current
UI	User Interface
UL	Underwriters Laboratories
UML	Unified Modeling Language
UMTS	Universal Mobile Telecommunications System
UPS	Uninterruptible Power Supply
USB	Universal Serial Bus
V	
VBA	Visual Basic for Applications
VCAT	Virtual Concatenation
VDE	German: Verband der Elektrotechnik, Elektronik und Informationstechnik (German Association for Electrical, Electronic and Information Technologies)
VDS	Voltage Detecting Systems
VDU	Visual Display Unit
VEE	Validation, Estimation and Editing
VF	Voice Frequency
VFD	Variable Frequency Drives
VHF	Very High Frequency
vMUX	versatile Multiplexer

VoIP	Voice over IP
VPP	Virtual Power Plant
VS	Voltage Scheduler
VSA	Voltage Stability Analysis
VSC	Voltage-Sourced Converter
VSTLF	Very Short-Term Load Forecast
VSR	Variable Shunt Reactors
VT	Voltage Transformer
VVC	Voltage/VAr Control
W	
WAN	Wide Area Network
WDM	Wavelength Division Multiplex
WG	Working Group
WIB	Working-Party on Instrument Behavior
WiBro	Wireless Broadband
WiFi	Wireless Fidelity
WinTDC	Windows Technology and Drive Control
WiMAX	Worldwide Interoperability for Microwave Access
WIPOS	Siemens Wind Power Offshore Substation
WLAN	Wireless Local Area Network
WMS	Warehouse Management System
WPP	Wind Power Plant
X	
XLPE	Cross-Linked Polyethylene
XML	Extensible Markup Language
XMPP	Extensible Messaging and Presence Protocol
Y	
Z	
ZnO	Zinc Oxide

12.2 Trademarks

All product designations used are trademark or product names of Siemens AG, its affiliates, or their respective owners. Microsoft, Encarta, MSN, and Windows are either registered trademarks or trademarks of Microsoft Corporation in the United States and/or other countries.

Assetguard PDM®
Assetguard GDM®
Assetguard CBM®
Assetguard MVC®
Assetguard Dialoc®
DIGSI®
ET 200®
FITformer®
Fusesaver™
GEAFOL®
ISCM®
Kiellinie®
LIRA®
MOD®
Model On Demand®
NETOMAC®
NXAIR®
NXPLUS®
OSCILLOSTORE®
OSCOP®
Pretact™
PSS®
PSS®E (PSS for Engineering)
PSS®MOD (PSS for Project Modeling)
PSS®MUST (PSS for Managing and Utilizing System Transmission)
PSS®NETOMAC® (PSS for Network Torsion Machine Control)
PSS®O (PSS for Operations)
PSS®ODMS (PSS for Operational Database Maintenance System)
PSS®PDMS (PSS for Protection Device Management System)
PSS®SINCAL (PSS for Siemens Network Calculation)
RCAM®
RUGGEDCOM®
S7-300®
S7-400®
SCALANCE®
SENTRON®
SICAM® PAS
SICARO®
SIESTORAGE®
SIGRADE®
SIGUARD®
SIGUARD® DAS
SIGUARD® PDP
SIGUARD® PSA
SIHARBOR®
SIMARIS®
SIMATIC®
SIMEAS SAFIR®
SIMEAS®
SIMOBREAKER®
SIMOVER®
SINCAL®
SINVERT®
SION®
SIPLINK®
SIPROTEC®
SIRIUS®
SITOP®
SITRAM®
SITRABLOC®
SIVACON®
Smart Grid Compass®
SPECTRUM POWER™
SURPASS®
TAI© (Technical Applications Integration©)
TLM™
Totally Integrated Power™
WinCC®
WIPOS®

Imprint

Published by
© Siemens AG 2017

Energy Management Division
Freyeslebenstrasse 1
91058 Erlangen, Germany

Publishing House:
Publicis Pixelpark, Erlangen, Germany

Edition 8.0

POWEREN.IR

Published by
© Siemens AG 2017

Energy Management Division
Freyeslebenstrasse 1
91058 Erlangen, Germany

For further information please contact the
Customer Support for Power & Energy
Phone: +49 180 524 70 00
(Charges depending on provider)
E-mail: support.energy@siemens.com
siemens.com/csc

BG184-000595-00 | 0417

Subject to changes and errors. The information given in this document only contains general descriptions and/or performance features which may not always specifically reflect those described, or which may undergo modification in the course of further development of the products. The requested performance features are binding only when they are expressly agreed upon in the concluded contract.

Trademarks mentioned in this document are the property of Siemens AG. Any unauthorized use is prohibited. All other designations in this document may represent trademarks whose use by third parties for their own purposes may violate the proprietary rights of the owner.

POWEREN.IR